Purchasing Office
P.O. Box 40197 • Lafayette, LA 70504-0197
Office: (337) 482-5396
Fax: (337) 482-5059

August 11, 2023

ADDENDUM NO. 1

PROPOSAL FOR FURNISHING ALL LABOR, MATERIALS, EQUIPMENT, TRANSPORTATION, SUPERVISION, PERMITS, ETC. NECESSARY FOR THE CLECO ALTERNATIVE ENERGY RESEARCH CENTER MICROGRID, LOCATED ON THE UL LAFAYETTE CAMPUS, CROWLEY, LOUISIANA.

Due September 12, 2023, 2:00 PM Solicitation No. 24203

The following is to be made part of the original specifications as though issued at the same time and shall be incorporated integrally therewith. This addendum shall be acknowledged on the BID FORM when submitted to the Purchasing Department prior to the bid due date/time.

Item No. 1 **– DRAWINGS ADDED:**
See attached drawings/plans associated with Solicitation File Number 24203.

This is a public works bid. The addendum **MUST** be acknowledged with your bid on the BID FORM. For questions related to bidding these projects, please contact the UL Lafayette Purchasing Department at bids@louisiana.edu or 337.482.9051.

Marie C. Frank, MPA, CPPB
Assistant Vice President for Administration & Finance
University of Louisiana at Lafayette
Department of Purchasing

Overhead View

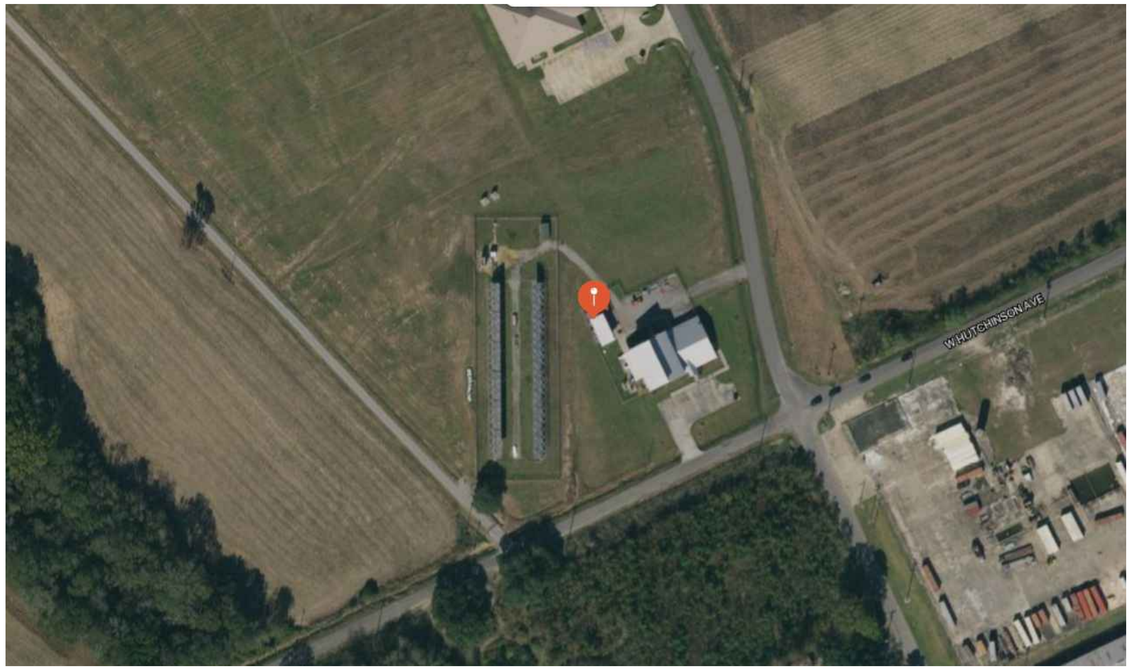

UNIVERSITY OF LOUISIANA AT LAFAYETTE–CLECO ALTERNATIVE ENERGY CENTER

ISLANDING MICROGRID SYSTEM

2008 HUTCHINSON AVE.
CROWLEY, LA 70526

PV System Size:	50 kWDC
Module Manufacturer:	First Solar
Module Model:	FS–6380A
Module Quantity:	132
String Quantity:	22
Inverter Manufacturer:	DynaPower
Inverter (Qty) Model:	(1) MPS–125 EHV 480V 3P
Battery Manufacturer:	Blue Planet Energy
Battery System:	128 kWh Battery
Electric Vehicle Service Equipment [EVSE]	ChargePoint CPE100 Series 24kW

Scope of Work Summary

Partial demolition of existing equipment and installation of new equipment
Integration of existing generation sources and loads into AC bus
Microgrid upgrade including:

- 50kW Ground–Mounted PV Array Installation
- Energy Storage System – Battery and DC/AC Inverter
- AC Source Bus
- AC Test Load
- Facility Grid Contactor
- Microgrid Controller

Location Map

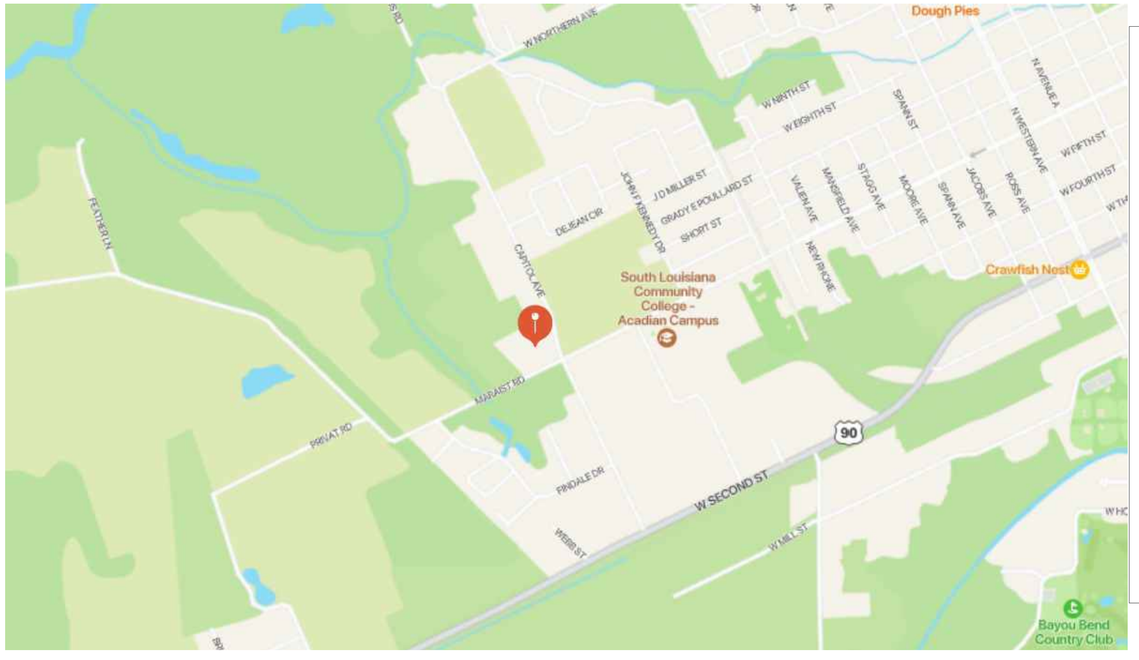

System Plan

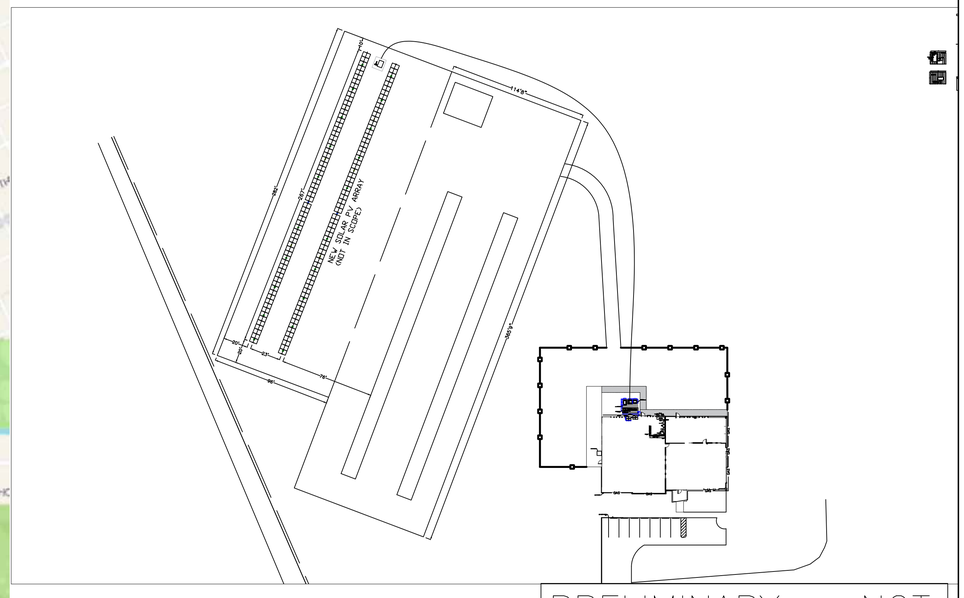

PRELIMINARY – NOT FOR CONSTRUCTION

Cover Page

SOLAR ALTERNATIVES
5804 River Oaks Rd S
Elmwood, LA 70123
1–504–267–1660

General Notes

MICROGRID SYSTEM
WITH GROUND MOUNT PV

TABLE OF CONTENTS

PV–1.0 COVER PAGE
PV–1.1 GENERAL NOTES
PV–1.2 REFERENCE
PV–2.0 SITE PLAN
PV–3.0 SOLAR PLAN
PV–3.1 STRING PLAN
PV–3.2 SOLAR COMPONENTS
PV–3.3 SOLAR COMPONENTS
PV–3.4 SOLAR COMPONENTS
PV–5.0 EQUIPMENT PLAN
PV–5.1 PAD LAYOUT
PV–5.2 PAD DETAILS
PV–5.3 EQUIPMENT ROOM DETAIL
PV–5.4 EQUIPMENT ROOM ELEVATION
PV–5.5 EQUIPMENT ROOM ELEVATION
PV–5.6 EQUIPMENT ROOM ELEVATION
PV–5.7 OUTDOOR WALL ELEVATION
PV–6.0 ELECTRICAL DIAGRAM
PV–7.0 ELECTRICAL CALCULATIONS
PV–8.0 COMMUNICATIONS DIAGRAM
PV–9.0 PANELBOARDS
PV–10.0 EQUIPMENT DATA SHEETS

Revisions		
No.	Issue	Date
110822	REVIEW	
120222	REVIEW	
121222	REVIEW	
122022	REVIEW	

Project Name and Address

UNIVERSITY OF LOUISIANA AT LAFAYETTE–CLECO POWER
2008 HUTCHINSON AVE
CROWLEY, LA 70526

Drawn By	Andrea Lee, Nick Boyd
Date	09/15/2022
Scale	N/A
Sheet	PV–1.0

CONFIDENTIALITY NOTICE: These plans and any documents transmitted with them may contain PRIVILEGED or CONFIDENTIAL information and may be read or used only by the intended recipient. If you are not the intended recipient, please be advised that you have received this in error and that any unauthorized review, distribution, printing, or copying of these Plans or any attached files is strictly prohibited.

Electrical Notes

The contractor shall obtain all necessary certifications for work installed, pay all related fees and charges, and deliver all certificates and inspection approvals to the owner before his work will be considered complete.

All work shall be in accordance with the National Electrical Code (NEC) and all materials shall be OSHA Nationally Recognized Testing Laboratory (NRTL) or Underwriters Laboratories (UL) labeled.

All new equipment shall have an interrupt rating (kAIC) greater than or equal to the existing equipment.

All inverters shall be IEEE 929 compliant and be inspected by the local utility before commissioning, testing, and operation.

Installation

Installer/subcontractor shall have a NABCEP PV Technician certification or equivalent, and should have successfully completed at least two other nonresidential solar PV projects of equal or greater size and complexity.
All work shall be installed in a first class and neat manner by those skilled in the trade involved. All details of the installation shall be electrically and mechanically correct.

Torque and mark all racking and mechanical lugs.

Conductor Installation

PV system conductors shall be identified per NEC 690.31(B).

THHN/THWN-2 insulation is acceptable for aluminum MC Cable. For aluminum conductors XHHW-2 shall be used.

Compression lugs shall be used on all aluminum cable terminations. Mechanical lugs may only be used for copper cable terminations.

Noalox to be used with all aluminum lugs.

Install wire and cable in accordance with the NEC, the National Electrical Contractors Association's (NECA) "Standard of Installation", and the Manufacturer's installation instructions. The installation shall be in accordance with recognized industry practices and the local authority having jurisdiction.

String wiring and homeruns shall be secured to the underside of the modules and racking using Sunbundler-type PVC coated stainless ties outdoor rated for UV. Outside of array, transition to EMT conduit.

The use of wire splices is prohibited (except in order to relocate LP-1).

Wire lube is required for wire pulls through conduit runs of 20' or longer, or with bends in 180° or more. Wire lube is required even when using self lubricating cables.

Raceways and Conduit

Raceway sizes shall be no less than 3/4" in diameter.

PVC conduits shall be schedule 80.

Conduit shall be EMT where not subject to physical damage. Conduits shall be IMC or RMC where subject to physical damage. PVC conduits are only permitted in below grade duct banks. Rooftop locations are considered subject to physical damage.

All rooftop conduit shall be marked per local fire codes.

All penetrations shall be sealed to maintain the existing fire rating.

EMT conduit shall use properly installed, factory-stamped raintight compression connectors.

Drawings show raceway locations, but contractor may adjust to suit field locations.

Conduit elbows shall be of the same make, quality, and finish as the conduit used.

Apply two protective coats of asphaltum compound for any galvanized steel conduits directly buried in earth.

Provide expansion fittings with bonding jumpers for every 100' of straight conduit run. Conduit expansion and deflection fittings with bonding jumpers shall be used whenever crossing building expansions.

Leave wire sufficiently long to permit making final connections.

Conduit over 10' in length shall be provided with synthetic pulling rope.

A bucket 15" wide or less shall be used for trenching.

All conduit trenches must be minimum of 18" or as required by code, and use detectable underground warning tape.

Repair surfaces damaged by trenching to match previously existing conditions.

Phase Relationship

Connect feeders to preserve phase relationship throughout the system. Phase legs of feeders shall match bus or cable arrangements for all connected equipment. Color coding shall be as follows:

-600 VAC, 1000 VDC, 1500 VDC
-Ungrounded Positive Conductor: Red
-Ungrounded Negative Conductor: Black
-AC and DC Systems:
-Grounded Conductor: White
-Ground: Green

-208/120 VAC
-A Phase: Black, B Phase: Red, C Phase: Blue

-277/480 VAC
-A Phase: Brown, B Phase: Orange, C Phase: Yellow

Color coding must be used consistently for the entire project. Where color coded cable is not used, tape conductor with overlapping colored tape.

Enclosures

Outdoor electrical enclosures shall be rated NEMA 3R, 4, Or 4X. Indoor enclosures shall be rated NEMA 1. All electrical equipment shall be listed or labeled by a recognized testing agency.

Panelboard doors shall be quarter turn latches or external handle with internal latches only.

Penetrations or cable entries in the top of outdoor enclosures are not permitted. Enter outdoor enclosures from the bottom or side.

Conduit terminating in outdoor enclosures shall use Myers-type hubs including a ground screw. Use raintight fittings for all cable entries.

Arc flash hazard warning labels shall be mounted on every combiner box, terminal box, inverter, AC and DC switch, transformer, and switchgear.

Handholes, pull boxes, or conduit bodies shall be installed when the raceway has more than 360° of bends, or as necessary to not exceed manufacturer's maximum cable pulling tension.

Grounding

The contractor shall furnish and install grounding in accordance with the National Electrical Code.

Tests

Final tests shall be held in the presence of owner's representatives and to their satisfaction.

Megger all string wiring, combiner box output feeders, and AC feeders to ensure quality installation and submit results to owner for review.

General Notes

The general notes apply to all solar-related "PV" numbered drawings under the contract. Refer to individual drawings for any additional notes.

The drawings indicate general arrangement of systems and work. Follow drawings in laying out work and verify space conditions. Maintain headroom, working conditions, and required clearances.

The PV system contractor shall coordinate all work with the engineer, the construction manager, and any other contractors to ensure that the PV system is installed as specified in these drawings.

Personal Protective Equipment (PPE) shall be used in accordance with NFPA 70E and OSHA requirements.

Unforeseen obstructions may require a change to the array layout. Changes to the array layout should be made as to not change the number of modules on a inverter.

Legend - Symbols

Solar Module

Junction Box

Panel Board

Circuit Breaker

DC/AC Inverter

Transformer

Current Transducer

Disconnect Switch

Fused Disconnect Switch

Fuse

Earth Ground

Adopted Codes

Adopted National Electrical Code Version:	2020
Adopted International Building Code Version:	2021
Adopted International Fire Code Version:	2015
Adopted International Mechanical Code Version:	2021
Adopted International Residential Code Version:	2021

ASCE/ANSI 7-10 Minimum Design Loads for Buildings and Other Structures

Authority Having Jurisdiction:	City of Crowley
Utility:	Cleco Power

Have a single labeled manual disconnect for the entire renewable facility at a service, approved by the utility on the outside (available to Cleco 24 hours a day with no notice).

Be able to synchronize with the utility and stay synchronized .

Have safety measures that prevent the generator from feeding electricity to the utility when the line is non-energized, or in an abnormal voltage or frequency situation or cause a degradation of the safety or quality of power on the electrical grid (i.e. UL1741 listed inverter).

Obtain all permits required by local authorities.

Abbreviations

Diameter or Phase	Ø
Amperes	A
Arc Fault Circuit Interrupter	AFCI
Amps Interrupting Capacity	AIC
Automatic Transfer Switch	ATS
American Wire Gauge	AWG
Circuit Breaker	BKR
Conduit	C
Combiner Box	CB
Current Transducer	CT
Circuit Breaker	CKT
Control Panel	CP
Copper	CU
Disconnect	DISCO
Equipment Grounding Conductor	EGC
Electric, Electrical	ELEC
Emergency	EMERG
Electrical Metallic Tubing	EMT
Equipment	EQUIP
Existing	EXIST
Ground	G, GND
Grounding Electrode Conductor	GEC
Ground-Fault Circuit Interrupter	GFCI
Ground-Fault Protection of Equipment	GFPE
High-Intensity Discharge (Lightning)	HID
Hertz	Hz
Intermediate Metallic Conduit	IMC
1000 Amps Interrupt Capacity	kAIC
1000 Circular Mils	kCMIL
Kilo-Volt Ampere	kVA
Kilowatt	kW
Lightning and Surge Arrestor	LA
Lightning	LTG
Long, Short, Instantaneous, and Ground Fault	LSIG
Maximum	MAX
Main Control Panel	MCP
Manufacturer	MFG
Main Lugs Only	MLO
Minimum	MIN
National Electrical Manufacturers Association	NEMA
Not To Scale	NTS
Pole	P
Power Factor	pf
Programmable Logic Controller	PLC
Primary	PRI
Polyvinyl Chloride	PVC
Power	PWR
Receptacle	RCPT
Rigid Galvanized Steel Conduit	RGS
Rigid Metal Conduit	RMC
Secondary	SEC
Short-Circuit Current Rating	SCCR
Surge Protection Device	SPD
Supply Side Bonding Jumper	SSBG
Switch	SW
To Be Determined	TBD
Typical	TYP
Volt	V
Volt-Ampere	VA
Watt	W
Weatherproof	WP
Transformer	XFMR

PRELIMINARY – NOT FOR CONSTRUCTION

SOLAR ALTERNATIVES
5804 River Oaks Rd S
Elmwood, LA 70123
1–504–267–1660

General Notes

MICROGRID SYSTEM
WITH GROUND MOUNT PV

TABLE OF CONTENTS

PV–1.0 COVER PAGE
PV–1.1 GENERAL NOTES
PV–1.2 REFERENCE
PV–2.0 SITE PLAN
PV–3.0 SOLAR PLAN
PV–3.1 STRING PLAN
PV–3.2 SOLAR COMPONENTS
PV–3.3 SOLAR COMPONENTS
PV–3.4 SOLAR COMPONENTS
PV–5.0 EQUIPMENT PLAN
PV–5.1 PAD LAYOUT
PV–5.2 PAD DETAILS
PV–5.3 EQUIPMENT ROOM DETAIL
PV–5.4 EQUIPMENT ROOM ELEVATION
PV–5.5 EQUIPMENT ROOM ELEVATION
PV–5.6 EQUIPMENT ROOM ELEVATION
PV–5.7 OUTDOOR WALL ELEVATION
PV–6.0 ELECTRICAL DIAGRAM
PV–7.0 ELECTRICAL CALCULATIONS
PV–8.0 COMMUNICATIONS DIAGRAM
PV–9.0 PANELBOARDS
PV–10.0 EQUIPMENT DATA SHEETS

Revisions		
No.	Issue	Date
110822	REVIEW	
120222	REVIEW	
121222	REVIEW	
122022	REVIEW	

Project Name and Address

UNIVERSITY OF LOUISIANA AT LAFAYETTE–CLECO POWER
2008 HUTCHINSON AVE
CROWLEY, LA 70526

Drawn By: Andrea Lee, Nick Boyd	Sheet: PV–1.1
Date: 09/15/2022	
Scale:	

CONFIDENTIALITY NOTICE: These plans and any documents transmitted with them may contain PRIVILEGED or CONFIDENTIAL information and may be read or used only by the intended recipient. If you are not the intended recipient, please be advised that you have received this in error and that any unauthorized review, distribution, printing, or copying of these Plans or any attached files is strictly prohibited.

LEGEND - GENERAL

———	LIGHT LINES INDICATE EXISTING OR BEYOND THE PROJECT SCOPE
———	DARK LINES INDICATE NEW OR WITHIN THE PROJECT SCOPE
- - - - - - - - - -	DASHED LINES INDICATE EQUIPMENT INSTALLED AT A LATER DATE
TEXT	LIGHT TEXT INDICATES EXISTING OR BEYOND THE PROJECT SCOPE
TEXT	DARK TEXT INDICATES NEW OR WITHIN THE PROJECT SCOPE

LEGEND - SYMBOLS/ANNOTATIONS

# / PV-#	REFERENCE NUMBER OR COUNT REFERENCE DRAWING OR PAGE
#-#	ARRAY SECTION – STRING NUMBER
	STRING
	REFERENCED DRAWING OR SECTION
	REVISION CLOUD OR PENDING MORE INFORMATION
	NORTH INDICATOR

SOLAR ALTERNATIVES
5804 River Oaks Rd S
Elmwood, LA 70123
1–504–267–1660

General Notes

MICROGRID SYSTEM
WITH GROUND MOUNT PV

TABLE OF CONTENTS

PV–1.0 COVER PAGE
PV–1.1 GENERAL NOTES
PV–1.2 REFERENCE
PV–2.0 SITE PLAN
PV–3.0 SOLAR PLAN
PV–3.1 STRING PLAN
PV–3.2 SOLAR COMPONENTS
PV–3.3 SOLAR COMPONENTS
PV–3.4 SOLAR COMPONENTS
PV–5.0 EQUIPMENT PLAN
PV–5.1 PAD LAYOUT
PV–5.2 PAD DETAILS
PV–5.3 EQUIPMENT ROOM DETAIL
PV–5.4 EQUIPMENT ROOM ELEVATION
PV–5.5 EQUIPMENT ROOM ELEVATION
PV–5.6 EQUIPMENT ROOM ELEVATION
PV–5.7 OUTDOOR WALL ELEVATION
PV–6.0 ELECTRICAL DIAGRAM
PV–7.0 ELECTRICAL CALCULATIONS
PV–8.0 COMMUNICATIONS DIAGRAM
PV–9.0 PANELBOARDS
PV–10.0 EQUIPMENT DATA SHEETS

Revisions		
No.	Issue	Date
110822	REVIEW	
120222	REVIEW	
121222	REVIEW	
122022	REVIEW	

Project Name and Address

UNIVERSITY OF LOUISIANA AT
LAFAYETTE–CLECO POWER
2008 HUTCHINSON AVE
CROWLEY, LA 70526

Drawn By
Andrea Lee, Nick Boyd

Date 09/15/2022

Scale

Sheet
PV–1.2

CONFIDENTIALITY NOTICE: These plans and any documents transmitted with them may contain PRIVILEGED or CONFIDENTIAL information and may be read or used only by the intended recipient. If you are not the intended recipient, please be advised that you have received this in error and that any unauthorized review, distribution, printing, or copying of these Plans or any attached files is strictly prohibited.

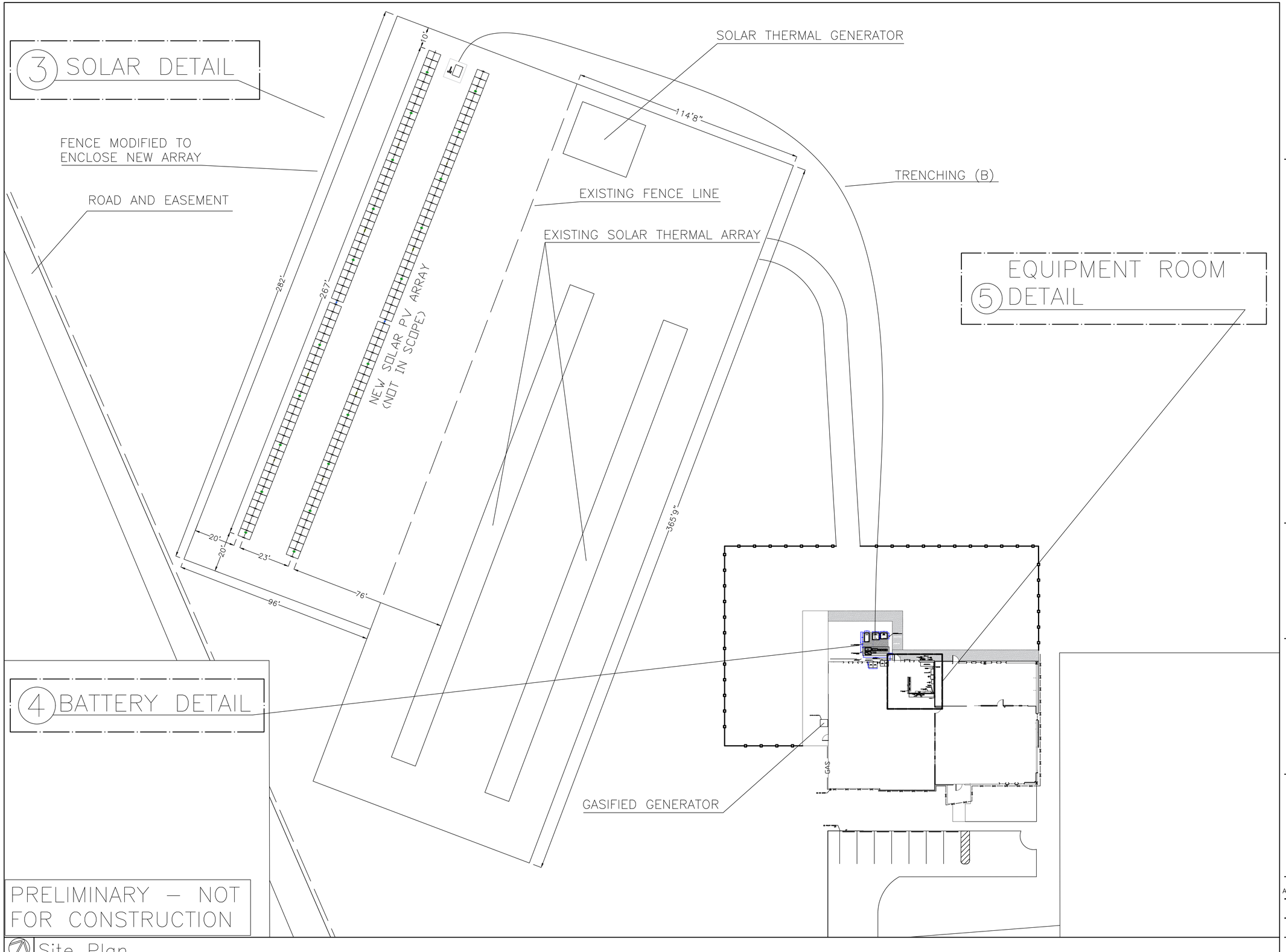

Site Plan

SOLAR ALTERNATIVES
5804 River Oaks Rd S
Elmwood, LA 70123
1–504–267–1660

General Notes

MICROGRID SYSTEM
WITH GROUND MOUNT PV

TABLE OF CONTENTS

PV–1.0 COVER PAGE
PV–1.1 GENERAL NOTES
PV–1.2 REFERENCE
PV–2.0 SITE PLAN
PV–3.0 SOLAR PLAN
PV–3.1 STRING PLAN
PV–3.2 SOLAR COMPONENTS
PV–3.3 SOLAR COMPONENTS
PV–3.4 SOLAR COMPONENTS
PV–5.0 EQUIPMENT PLAN
PV–5.1 PAD LAYOUT
PV–5.2 PAD DETAILS
PV–5.3 EQUIPMENT ROOM DETAIL
PV–5.4 EQUIPMENT ROOM ELEVATION
PV–5.5 EQUIPMENT ROOM ELEVATION
PV–5.6 EQUIPMENT ROOM ELEVATION
PV–5.7 OUTDOOR WALL ELEVATION
PV–6.0 ELECTRICAL DIAGRAM
PV–7.0 ELECTRICAL CALCULATIONS
PV–8.0 COMMUNICATIONS DIAGRAM
PV–9.0 PANELBOARDS
PV–10.0 EQUIPMENT DATA SHEETS

Revisions		
No.	Issue	Date
110822	REVIEW	
120222	REVIEW	
121222	REVIEW	
122022	REVIEW	

Project Name and Address

UNIVERSITY OF LOUISIANA AT LAFAYETTE–CLECO POWER
2008 HUTCHINSON AVE
CROWLEY, LA 70526

Drawn By: Andrea Lee, Nick Boyd	Sheet: PV–2.0
Date: 09/15/2022	
Scale: N/A	

CONFIDENTIALITY NOTICE: These plans and any documents transmitted with them may contain PRIVILEGED or CONFIDENTIAL information and may be read or used only by the intended recipient. If you are not the intended recipient, please be advised that you have received this in error and that any unauthorized review, distribution, printing, or copying of these Plans or any attached files is strictly prohibited.

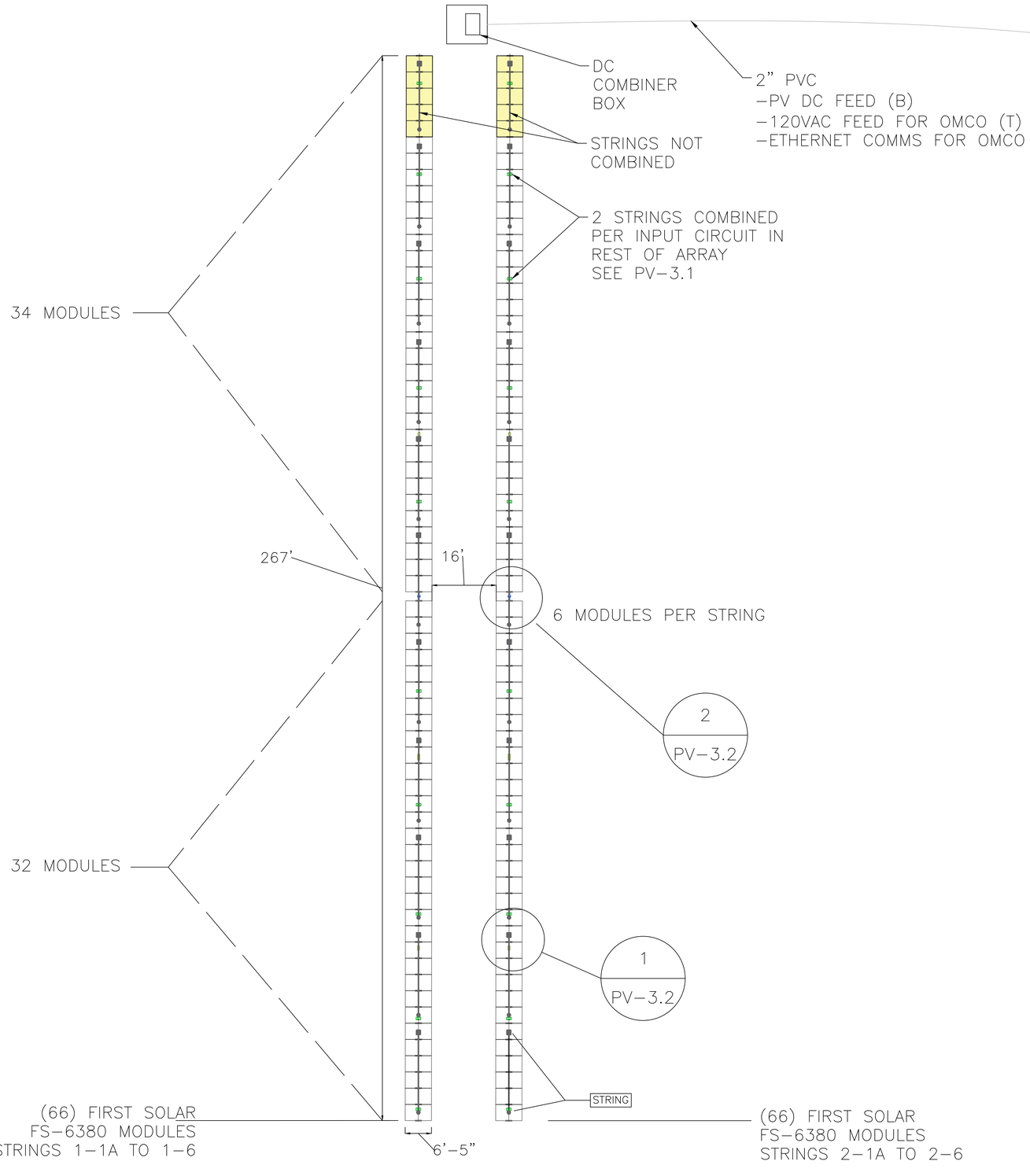

DC COMBINER BOX – (1) CONCRETE PAD DETAIL

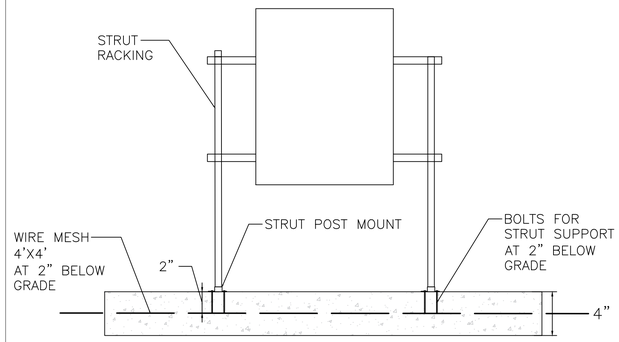

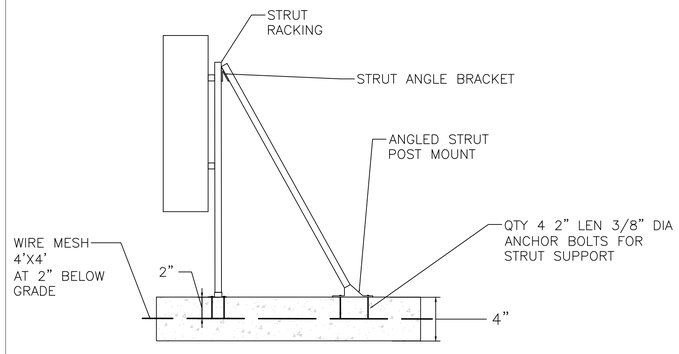

NOTE:

1. INSTALLATION OF RACKING AND MODULES BY OTHER CONTRACTOR (NOT IN SCOPE)
2. DRIVE AND PILE LOCATIONS ARE PER MANUFACTURERS INSTRUCTION
3. TWO HORIZONTAL SINGLE–AXIS TRACKERS
4. 66 PV MODULES AND 11 POSTS PER TRACKER
5. RANGE OF MOTION – 120°
6. ONE BRUSHED 24VDC MOTOR PER TRACKER

PRELIMINARY – NOT FOR CONSTRUCTION

Solar Detail

SOLAR ALTERNATIVES
5804 River Oaks Rd S
Elmwood, LA 70123
1–504–267–1660

General Notes

MICROGRID SYSTEM
WITH GROUND MOUNT PV

TABLE OF CONTENTS

PV–1.0 COVER PAGE
PV–1.1 GENERAL NOTES
PV–1.2 REFERENCE
PV–2.0 SITE PLAN
PV–3.0 SOLAR PLAN
PV–3.1 STRING PLAN
PV–3.2 SOLAR COMPONENTS
PV–3.3 SOLAR COMPONENTS
PV–3.4 SOLAR COMPONENTS
PV–5.0 EQUIPMENT PLAN
PV–5.1 PAD LAYOUT
PV–5.2 PAD DETAILS
PV–5.3 EQUIPMENT ROOM DETAIL
PV–5.4 EQUIPMENT ROOM ELEVATION
PV–5.5 EQUIPMENT ROOM ELEVATION
PV–5.6 EQUIPMENT ROOM ELEVATION
PV–5.7 OUTDOOR WALL ELEVATION
PV–6.0 ELECTRICAL DIAGRAM
PV–7.0 ELECTRICAL CALCULATIONS
PV–8.0 COMMUNICATIONS DIAGRAM
PV–9.0 PANELBOARDS
PV–10.0 EQUIPMENT DATA SHEETS

Revisions		
No.	Issue	Date
110822	REVIEW	
120222	REVIEW	
121222	REVIEW	
122022	REVIEW	

Project Name and Address

UNIVERSITY OF LOUISIANA AT LAFAYETTE–CLECO POWER
2008 HUTCHINSON AVE
CROWLEY, LA 70526

Drawn By: Andrea Lee, Nick Boyd	Sheet: PV–3.0
Date: 09/15/2022	
Scale: N/A	

CONFIDENTIALITY NOTICE: These plans and any documents transmitted with them may contain PRIVILEGED or CONFIDENTIAL information and may be read or used only by the intended recipient. If you are not the intended recipient, please be advised that you have received this in error and that any unauthorized review, distribution, printing, or copying of these Plans or any attached files is strictly prohibited.

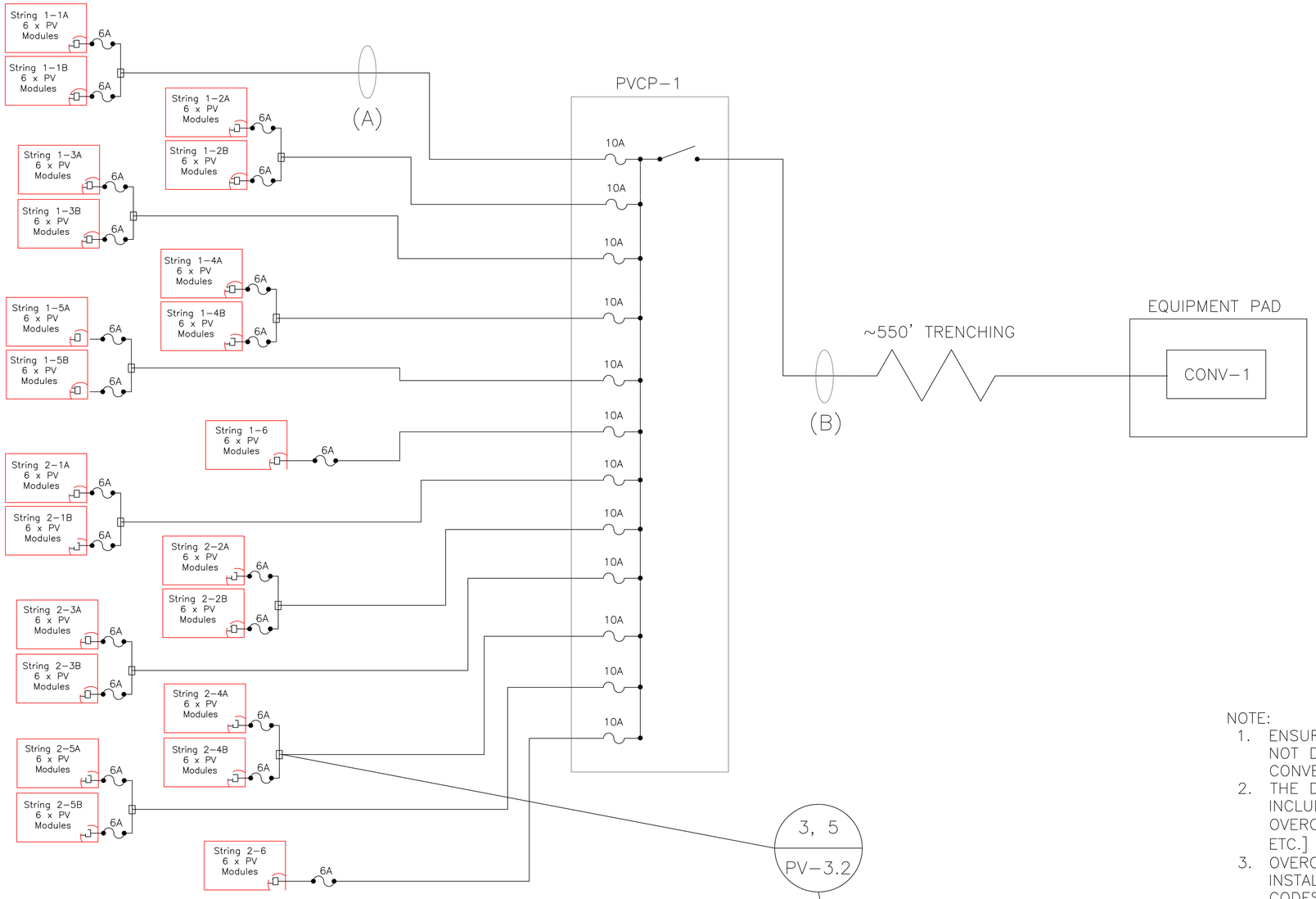

NOTE:

1. ENSURE LARGE INRUSH CURRENTS ARE NOT DRAWN FROM THE DC–DC CONVERTER.
2. THE DC–DC CONVERTER DOES NOT INCLUDE ANY FUSING OR OTHER FORM OF OVERCURRENT PROTECTION [DISCONNECTS, ETC.]
3. OVERCURRENT PROTECTION MUST BE INSTALLED IN ACCORDANCE TO LOCAL CODES

TYPICAL STRING WIRING

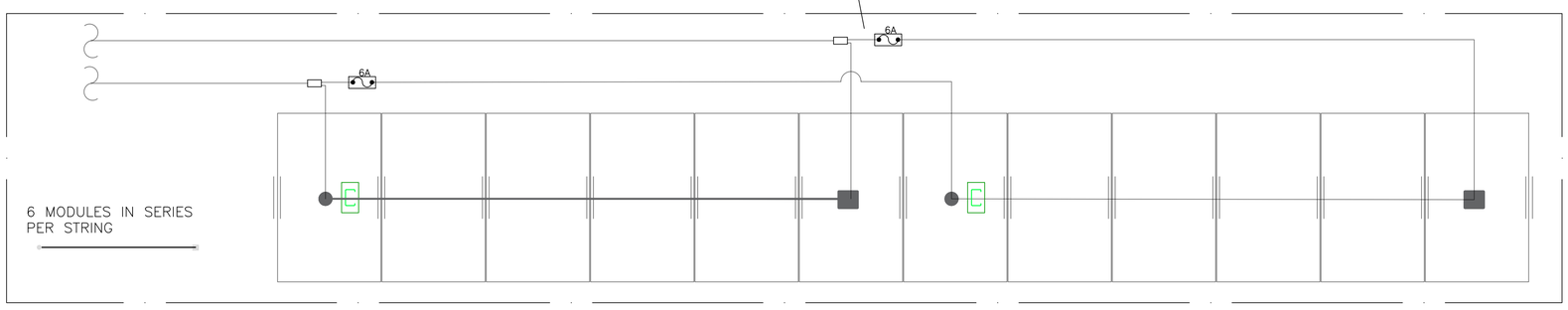

String Plan

SOLAR ALTERNATIVES
5804 River Oaks Rd S
Elmwood, LA 70123
1–504–267–1660

General Notes

MICROGRID SYSTEM
WITH GROUND MOUNT PV

TABLE OF CONTENTS

PV–1.0 COVER PAGE
PV–1.1 GENERAL NOTES
PV–1.2 REFERENCE
PV–2.0 SITE PLAN
PV–3.0 SOLAR PLAN
PV–3.1 STRING PLAN
PV–3.2 SOLAR COMPONENTS
PV–3.3 SOLAR COMPONENTS
PV–3.4 SOLAR COMPONENTS
PV–5.0 EQUIPMENT PLAN
PV–5.1 PAD LAYOUT
PV–5.2 PAD DETAILS
PV–5.3 EQUIPMENT ROOM DETAIL
PV–5.4 EQUIPMENT ROOM ELEVATION
PV–5.5 EQUIPMENT ROOM ELEVATION
PV–5.6 EQUIPMENT ROOM ELEVATION
PV–5.7 OUTDOOR WALL ELEVATION
PV–6.0 ELECTRICAL DIAGRAM
PV–7.0 ELECTRICAL CALCULATIONS
PV–8.0 COMMUNICATIONS DIAGRAM
PV–9.0 PANELBOARDS
PV–10.0 EQUIPMENT DATA SHEETS

Revisions		
No.	Issue	Date
110822	REVIEW	
120222	REVIEW	
121222	REVIEW	
122022	REVIEW	

Project Name and Address

UNIVERSITY OF LOUISIANA AT LAFAYETTE–CLECO POWER
2008 HUTCHINSON AVE
CROWLEY, LA 70526

Drawn By: Andrea Lee, Nick Boyd	Sheet: PV–3.1
Date: 09/15/2022	
Scale: N/A	

CONFIDENTIALITY NOTICE: These plans and any documents transmitted with them may contain PRIVILEGED or CONFIDENTIAL information and may be read or used only by the intended recipient. If you are not the intended recipient, please be advised that you have received this in error and that any unauthorized review, distribution, printing, or copying of these Plans or any attached files is strictly prohibited.

DRIVE POST

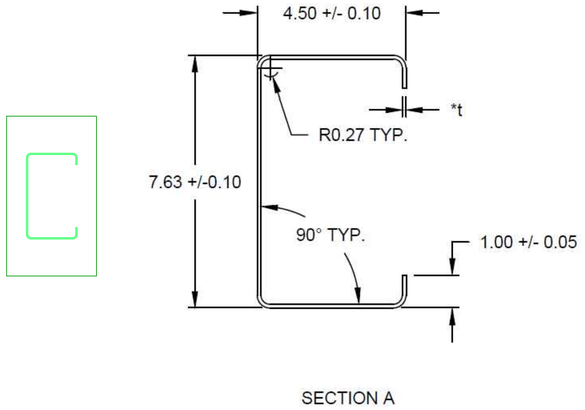

SECTION A

NOTES. GR50–MIN
GR235 GALVANIZED
DEPTH PER MANUFACTURER

1

IN–LINE PV FUSE

5

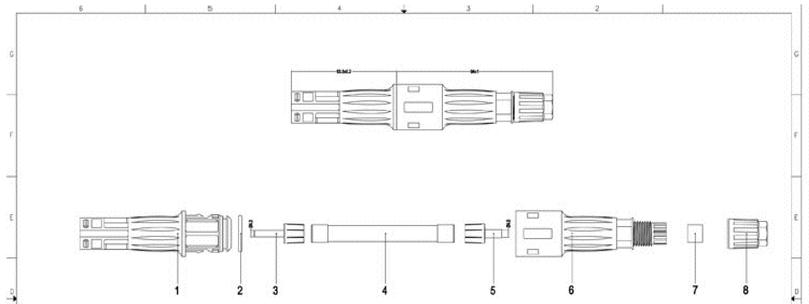

No.	Product No.	Product Name	Q'TY	Colour	Material
8	SY-TC4A-P01-00	Ø15 Turncap	1	Black	PPO
7	SY-TC4B-S01-00	Ø10.5*7.0 Waterproof Ring(For 4–6MM^2 Cable)	1	Black	Silicone
6	SY-CF0-15-P03	Ø4.0 Cable Male Connector Housing	1	Black	PPO
5	SY-CF3-15-M01	Ø4 Cable Terminal	1	White	Copper
4	SY-CF0-15-M01	FUSE 15A(Ø10x85mm)	1	White	Ceramic
3	SY-CF0-15-M01	Ø4 Male Terminal	1	White	Copper
2	SY-CF0-15-S01	Ø22*2*O* Ring	1	Red	Silicone
1	SY-CF0-15-P01	Ø4.0 Male Connector Housing	1	Black	PPO

Dimension	Tolerance
30.00–60.00	±0.05
60.00–90.00	±0.05
90.00–120.00	±0.05
120.00~	±0.05
Angle	
0~60°	±0.05
60°~	±0.05

LEADER TECHNOLOGY (SHENZHEN) CO.,LIMITED

APVD: CHK: DWN:

NAME: 1500V MC4 Fuse Connector

PRODUCT NUMBER: SY-CF3-15

Units: Size MM A4 | SCALE: | SHEET 1 OF 1 | SHEET SLATT: REV A

BEARING AND POST

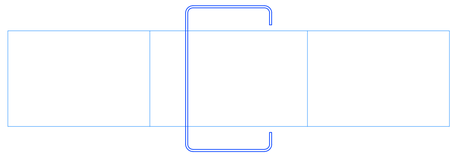

NOTES. GR50–MIN
GR235 GALVANIZED
UL 3703

2

BEARING ASSEMBLY

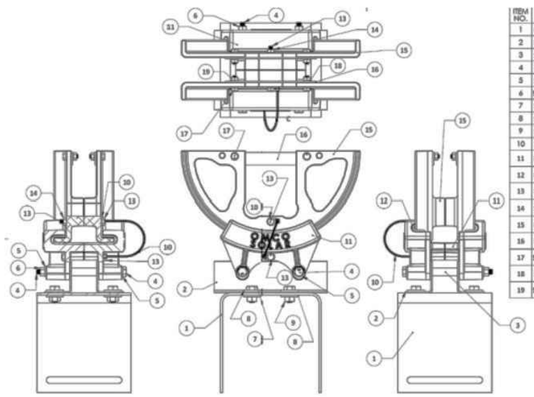

ITEM NO.	PART NUMBER	DESCRIPTION	QTY.
1	PCO-1000	POST CAP OPTIMIZED	1
2	LB-1000	L-BRACKET	2
3	S-1000	SLEEVE, MASTER	2
4	SIN/181230	M10 X 180 HEX HEAD BOLT	2
5	SIN/162726	M10 WASHER	4
6	SIN/131952	M10 HEX NUT	2
7	SIN/162696	M12 X 25 HEX HEAD BOLT	4
8	SIN/153859	1/2" USS WASHER	8
9	SIN/131959	M12 HEX NUT	4
10	19-166-00	GROUNDING JUMPER	1
11	BS-1000	BEARING SADDLE	2
12	BI-1000	BEARING INSERT	2
13	SIN/162703	M8 X 90 HEX HEAD BOLT	2
14	SIN/153963	M8 HEX NUT	2
15	BR-1000	BEARING RIM	2
16	HDS-1000	HOLD DOWN STRAP	2
17	SIN/181234	M8 X 30 HEX HEAD BOLT	4
18	SIN162731	M8 WASHER	8
19	SIN/153963	M8 HEX NUT	4

4

SEE "PV–10 EQUIPMENT SPECIFICATION"
FOR ADDITIONAL DETAILS

SOLAR BRANCH CONNECTORS

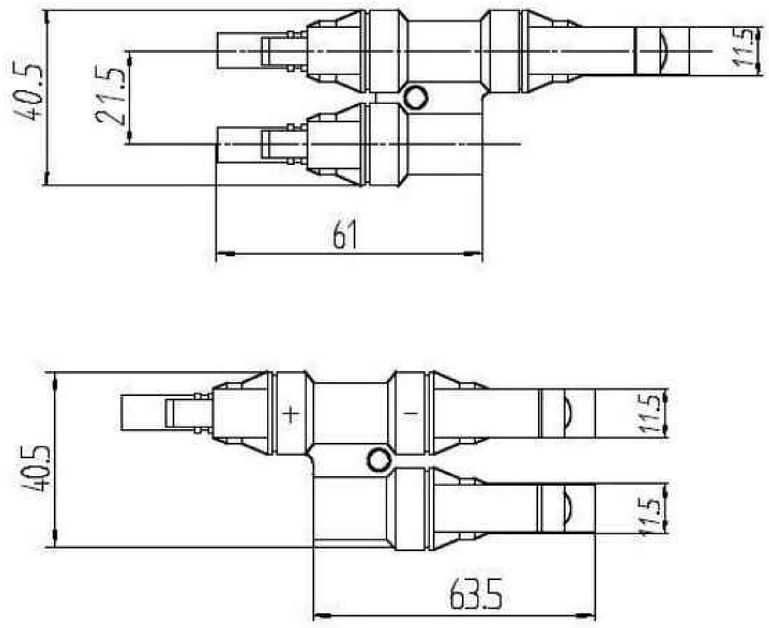

NOTES. PPO INSULATED
COPPER PLATED
20–50A, 1500VDC

3

Solar Components

SOLAR ALTERNATIVES

5804 River Oaks Rd S
Elmwood, LA 70123
1–504–267–1660

General Notes

MICROGRID SYSTEM
WITH GROUND MOUNT PV

TABLE OF CONTENTS

PV–1.0 COVER PAGE
PV–1.1 GENERAL NOTES
PV–1.2 REFERENCE
PV–2.0 SITE PLAN
PV–3.0 SOLAR PLAN
PV–3.1 STRING PLAN
PV–3.2 SOLAR COMPONENTS
PV–3.3 SOLAR COMPONENTS
PV–3.4 SOLAR COMPONENTS
PV–5.0 EQUIPMENT PLAN
PV–5.1 PAD LAYOUT
PV–5.2 PAD DETAILS
PV–5.3 EQUIPMENT ROOM DETAIL
PV–5.4 EQUIPMENT ROOM ELEVATION
PV–5.5 EQUIPMENT ROOM ELEVATION
PV–5.6 EQUIPMENT ROOM ELEVATION
PV–5.7 OUTDOOR WALL ELEVATION
PV–6.0 ELECTRICAL DIAGRAM
PV–7.0 ELECTRICAL CALCULATIONS
PV–8.0 COMMUNICATIONS DIAGRAM
PV–9.0 PANELBOARDS
PV–10.0 EQUIPMENT DATA SHEETS

Revisions		
No.	Issue	Date
110822	REVIEW	
120222	REVIEW	
121222	REVIEW	
122022	REVIEW	

Project Name and Address

UNIVERSITY OF LOUISIANA AT
LAFAYETTE–CLECO POWER
2008 HUTCHINSON AVE
CROWLEY, LA 70526

Drawn By: Andrea Lee, Nick Boyd	Sheet: PV–3.2
Date: 09/15/2022	
Scale: N/A	

CONFIDENTIALITY NOTICE: These plans and any documents transmitted with them may contain PRIVILEGED or CONFIDENTIAL information and may be read or used only by the intended recipient. If you are not the intended recipient, please be advised that you have received this in error and that any unauthorized review, distribution, printing, or copying of these Plans or any attached files is strictly prohibited.

FINAL ASSEMBLY

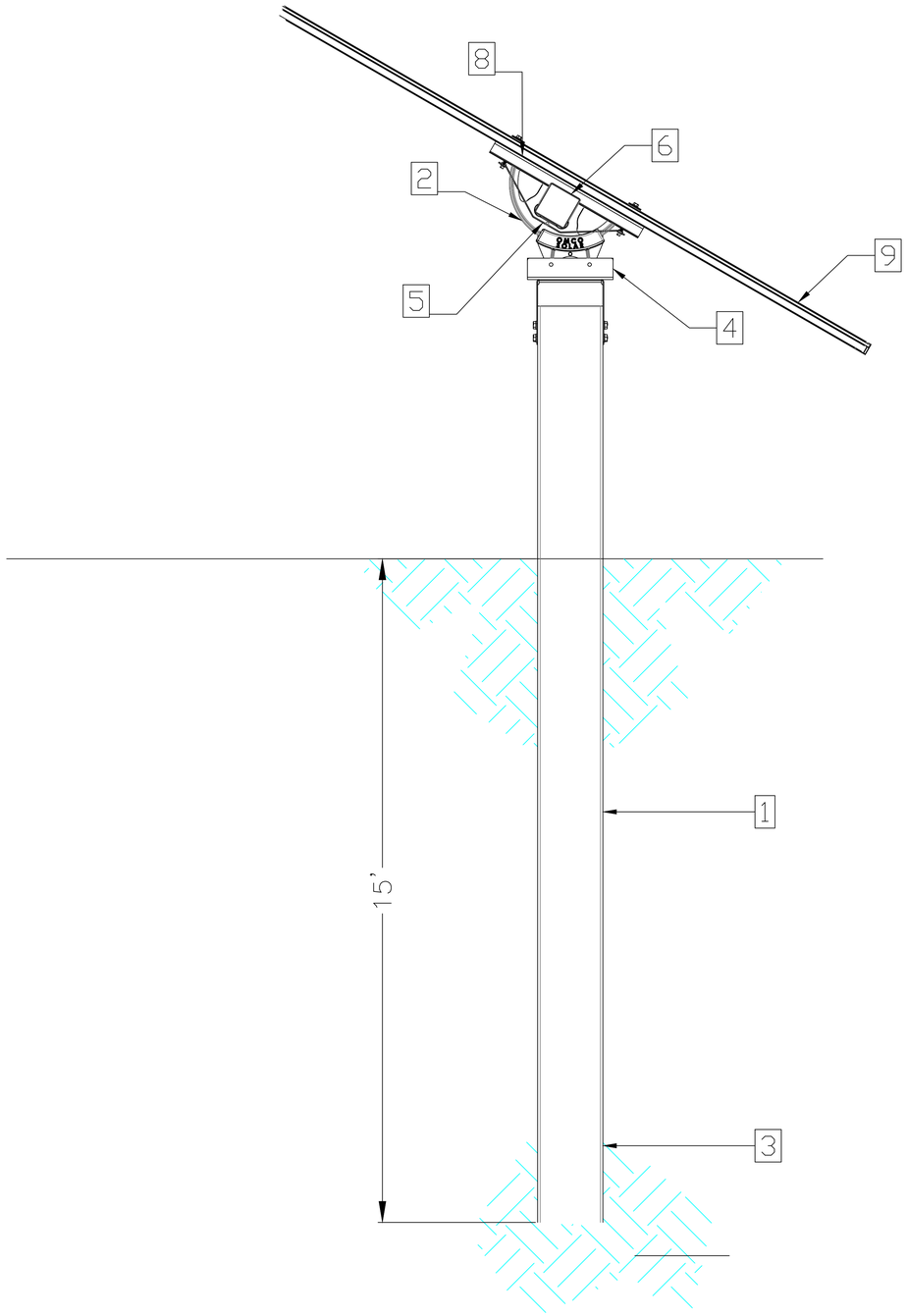

Item	Component	Purpose	Quantity Per Tracker
1	Drive Post	Mounts the Slew Drive and journal assemblies	1
2	Slew Drive and Motor	Rotates the tracker	1
3	Bearing Post	Mounts the bearing assemblies	Varies
4	Bearing Assembly	Allows the rotation of the torque tube	Varies
5	Journal Assembly	Connects the drive unit to torque tubes	2
6	Torque Tube	Connects all the module mounts together	Varies
7	Tracker Controller Unit	Provides power to motor / slew drive unit	1
8	Module Mount	Supports the PV modules	Varies
9	PV Modules	Generate power	Varies
10	Splice	Connects adjacent torque tubes	Varies
11	Damper and Damper Mount	Helps control tracker motion during high wind	Varies

Solar Components – OMCO SINGLE–AXIS TRACKER

SOLAR ALTERNATIVES

5804 River Oaks Rd S
Elmwood, LA 70123
1–504–267–1660

General Notes

MICROGRID SYSTEM
WITH GROUND MOUNT PV

TABLE OF CONTENTS

PV–1.0 COVER PAGE
PV–1.1 GENERAL NOTES
PV–1.2 REFERENCE
PV–2.0 SITE PLAN
PV–3.0 SOLAR PLAN
PV–3.1 STRING PLAN
PV–3.2 SOLAR COMPONENTS
PV–3.3 SOLAR COMPONENTS
PV–3.4 SOLAR COMPONENTS
PV–5.0 EQUIPMENT PLAN
PV–5.1 PAD LAYOUT
PV–5.2 PAD DETAILS
PV–5.3 EQUIPMENT ROOM DETAIL
PV–5.4 EQUIPMENT ROOM ELEVATION
PV–5.5 EQUIPMENT ROOM ELEVATION
PV–5.6 EQUIPMENT ROOM ELEVATION
PV–5.7 OUTDOOR WALL ELEVATION
PV–6.0 ELECTRICAL DIAGRAM
PV–7.0 ELECTRICAL CALCULATIONS
PV–8.0 COMMUNICATIONS DIAGRAM
PV–9.0 PANELBOARDS
PV–10.0 EQUIPMENT DATA SHEETS

Revisions		
No.	Issue	Date
110822	REVIEW	
120222	REVIEW	
121222	REVIEW	
122022	REVIEW	

Project Name and Address

UNIVERSITY OF LOUISIANA AT LAFAYETTE–CLECO POWER
2008 HUTCHINSON AVE
CROWLEY, LA 70526

Drawn By: Andrea Lee, Nick Boyd
Date: 09/15/2022
Scale: N/A
Sheet: PV–3.3

CONFIDENTIALITY NOTICE: These plans and any documents transmitted with them may contain PRIVILEGED or CONFIDENTIAL information and may be read or used only by the intended recipient. If you are not the intended recipient, please be advised that you have received this in error and that any unauthorized review, distribution, printing, or copying of these Plans or any attached files is strictly prohibited.

COMPLEXITY CHART							
PART NUMBER	THICKNESS (t)	SOUTH DIAG (h1)	NORTH DIAG (h2)	TILT SPACING (b)	LENGTH (L)	GALVANIZATION	MIN Fy / Fu (KSI)
P100-00	0.145	46.61	40.61	3.32	184.61	G235	57/70

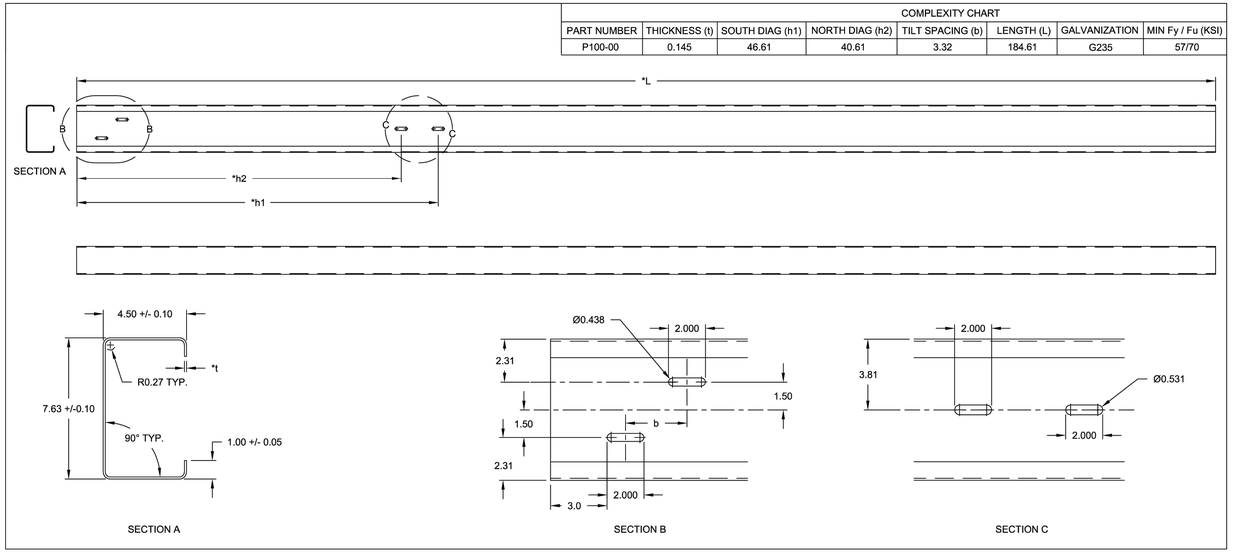

NOTE:
FINAL LOAD TEST FOR FS SERIES 6 PV MODULES WILL DETERMINE THE OPTIMIZED 400MM SPACED BOLTING LOCATION PER MANUFACTURER

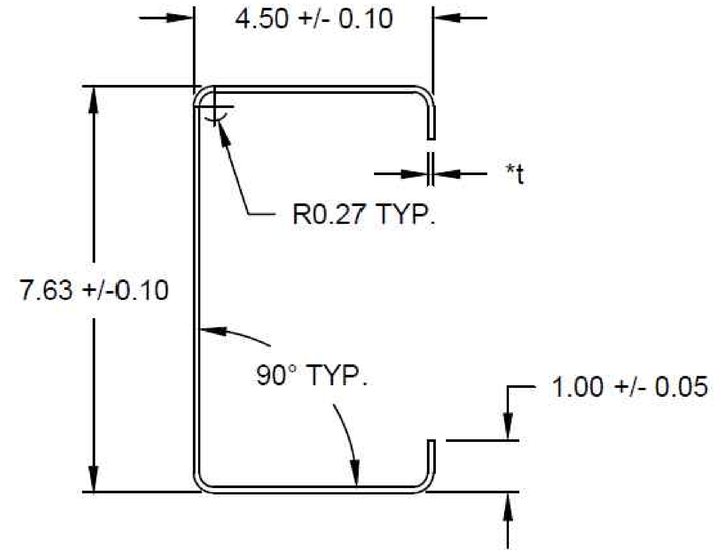

SECTION A

1 OMCO SINGLE-AXIS TRACKER – DETAIL

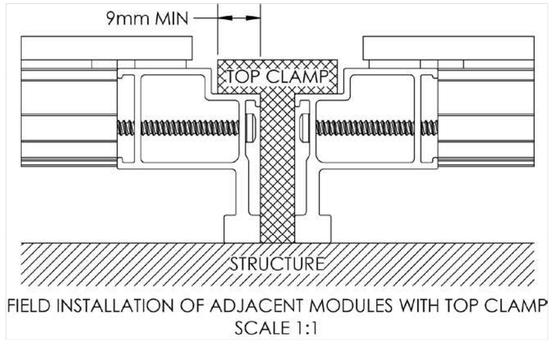

Figure 6: Shared Top Clamp Detail on Series 6 Modules

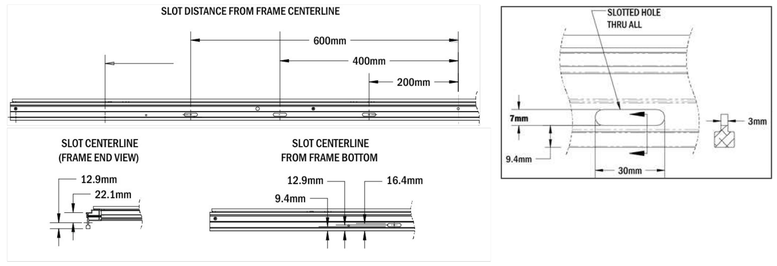

Figure 7: SpeedSlot Detail on Series 6 Module Long Edge Frame

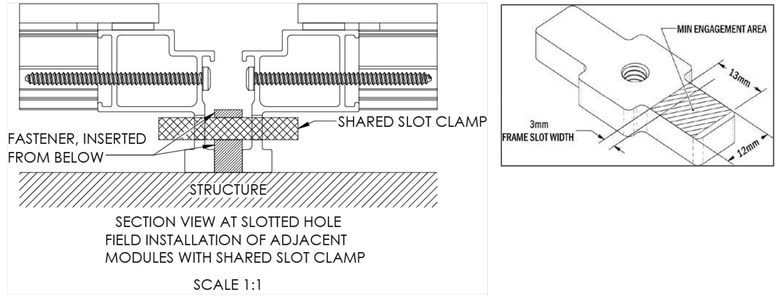

Figure 8: Shared SpeedSlot Clamp Detail on Series 6 Modules

PRELIMINARY – NOT FOR CONSTRUCTION

2 PV MODULE TOP MOUNT – DETAIL

3 PV MODULE SPEEDSLOT MOUNT – DETAIL

SOLAR ALTERNATIVES

5804 River Oaks Rd S
Elmwood, LA 70123
1–504–267–1660

General Notes

MICROGRID SYSTEM
WITH GROUND MOUNT PV

TABLE OF CONTENTS

PV–1.0 COVER PAGE
PV–1.1 GENERAL NOTES
PV–1.2 REFERENCE
PV–2.0 SITE PLAN
PV–3.0 SOLAR PLAN
PV–3.1 STRING PLAN
PV–3.2 SOLAR COMPONENTS
PV–3.3 SOLAR COMPONENTS
PV–3.4 SOLAR COMPONENTS
PV–5.0 EQUIPMENT PLAN
PV–5.1 PAD LAYOUT
PV–5.2 PAD DETAILS
PV–5.3 EQUIPMENT ROOM DETAIL
PV–5.4 EQUIPMENT ROOM ELEVATION
PV–5.5 EQUIPMENT ROOM ELEVATION
PV–5.6 EQUIPMENT ROOM ELEVATION
PV–5.7 OUTDOOR WALL ELEVATION
PV–6.0 ELECTRICAL DIAGRAM
PV–7.0 ELECTRICAL CALCULATIONS
PV–8.0 COMMUNICATIONS DIAGRAM
PV–9.0 PANELBOARDS
PV–10.0 EQUIPMENT DATA SHEETS

Revisions		
No.	Issue	Date
110822	REVIEW	
120222	REVIEW	
121222	REVIEW	
122022	REVIEW	

Project Name and Address

UNIVERSITY OF LOUISIANA AT LAFAYETTE–CLECO POWER
2008 HUTCHINSON AVE
CROWLEY, LA 70526

Drawn By: Andrea Lee, Nick Boyd	Sheet: PV–3.4
Date: 09/15/2022	
Scale: N/A	

CONFIDENTIALITY NOTICE: These plans and any documents transmitted with them may contain PRIVILEGED or CONFIDENTIAL information and may be read or used only by the intended recipient. If you are not the intended recipient, please be advised that you have received this in error and that any unauthorized review, distribution, printing, or copying of these Plans or any attached files is strictly prohibited.

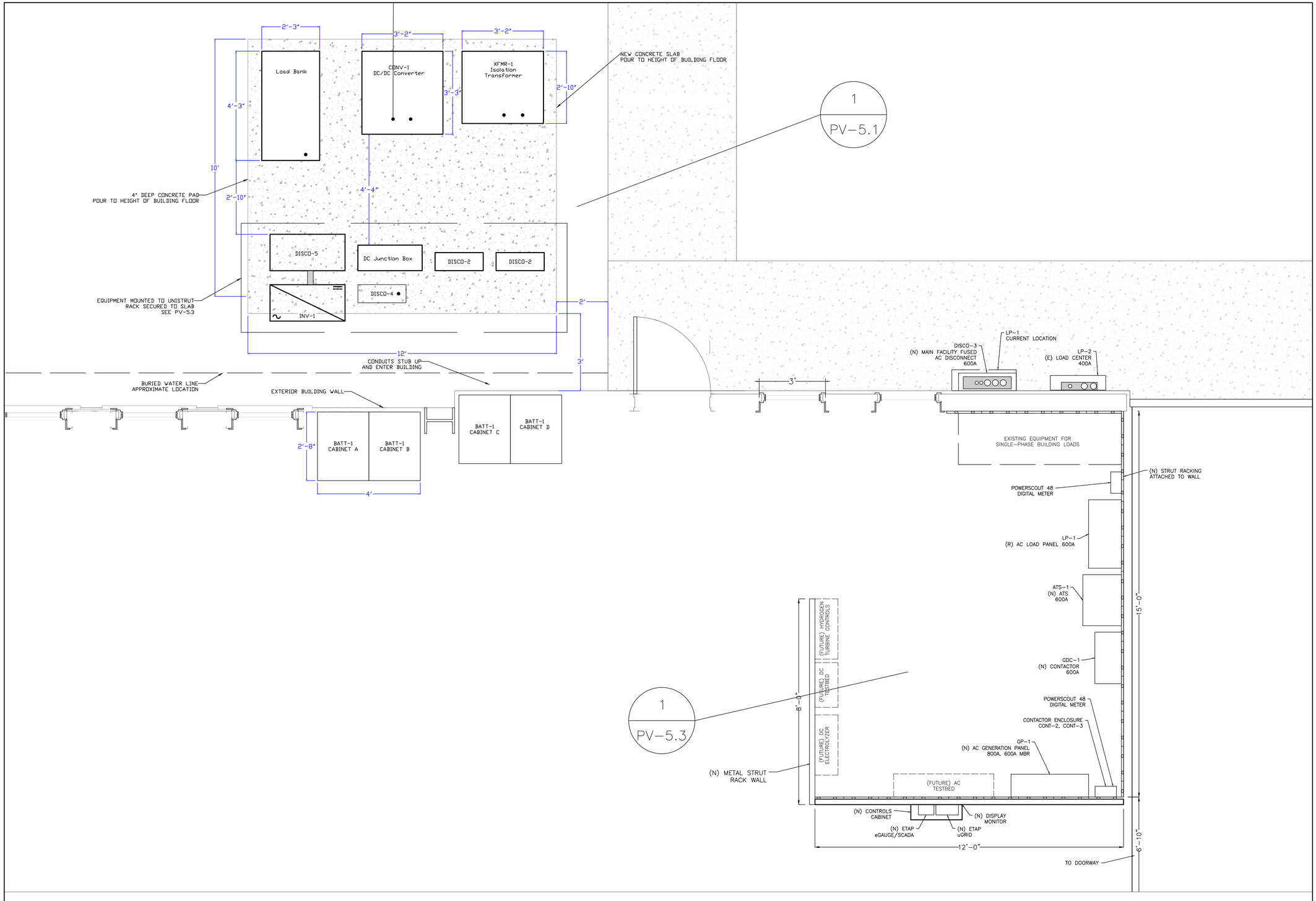

PRELIMINARY – NOT FOR CONSTRUCTION

Equipment Plan

SOLAR ALTERNATIVES

5804 River Oaks Rd S
Elmwood, LA 70123
1-504-267-1660

General Notes

MICROGRID SYSTEM
WITH GROUND MOUNT PV

TABLE OF CONTENTS

PV-1.0 COVER PAGE
PV-1.1 GENERAL NOTES
PV-1.2 REFERENCE
PV-2.0 SITE PLAN
PV-3.0 SOLAR PLAN
PV-3.1 STRING PLAN
PV-3.2 SOLAR COMPONENTS
PV-3.3 SOLAR COMPONENTS
PV-3.4 SOLAR COMPONENTS
PV-5.0 EQUIPMENT PLAN
PV-5.1 PAD LAYOUT
PV-5.2 PAD DETAILS
PV-5.3 EQUIPMENT ROOM DETAIL
PV-5.4 EQUIPMENT ROOM ELEVATION
PV-5.5 EQUIPMENT ROOM ELEVATION
PV-5.6 EQUIPMENT ROOM ELEVATION
PV-5.7 OUTDOOR WALL ELEVATION
PV-6.0 ELECTRICAL DIAGRAM
PV-7.0 ELECTRICAL CALCULATIONS
PV-8.0 COMMUNICATIONS DIAGRAM
PV-9.0 PANELBOARDS
PV-10.0 EQUIPMENT DATA SHEETS

Revisions		
No.	Issue	Date
110822	REVIEW	
120222	REVIEW	
121222	REVIEW	
122022	REVIEW	

Project Name and Address

UNIVERSITY OF LOUISIANA AT
LAFAYETTE-CLECO POWER
2008 HUTCHINSON AVE
CROWLEY, LA 70526

Drawn By: Andrea Lee, Nick Boyd	Sheet: PV-5.0
Date: 09/15/2022	
Scale: N/A	

CONFIDENTIALITY NOTICE: These plans and any documents transmitted with them may contain PRIVILEGED or CONFIDENTIAL information and may be read or used only by the intended recipient. If you are not the intended recipient, please be advised that you have received this in error and that any unauthorized review, distribution, printing, or copying of these Plans or any attached files is strictly prohibited.

NOTE 1. MIN. CLEARANCE OF 8 FT. REQUIRED FROM EXHAUST AND INTAKE SCREENS TO ANY OBSTRUCTION

NOTE 2. EXHAUST LOUVER

NOTE 3. CONTRACTOR TO VERIFY CONDUIT ENTRY WINDOWS

NOTE 4. INSTALL EQUIPMENT ANCHORS PER MANUFACTURER SPECIFICATIONS

SEE PV-07 FOR ADDITIONAL DETAILS

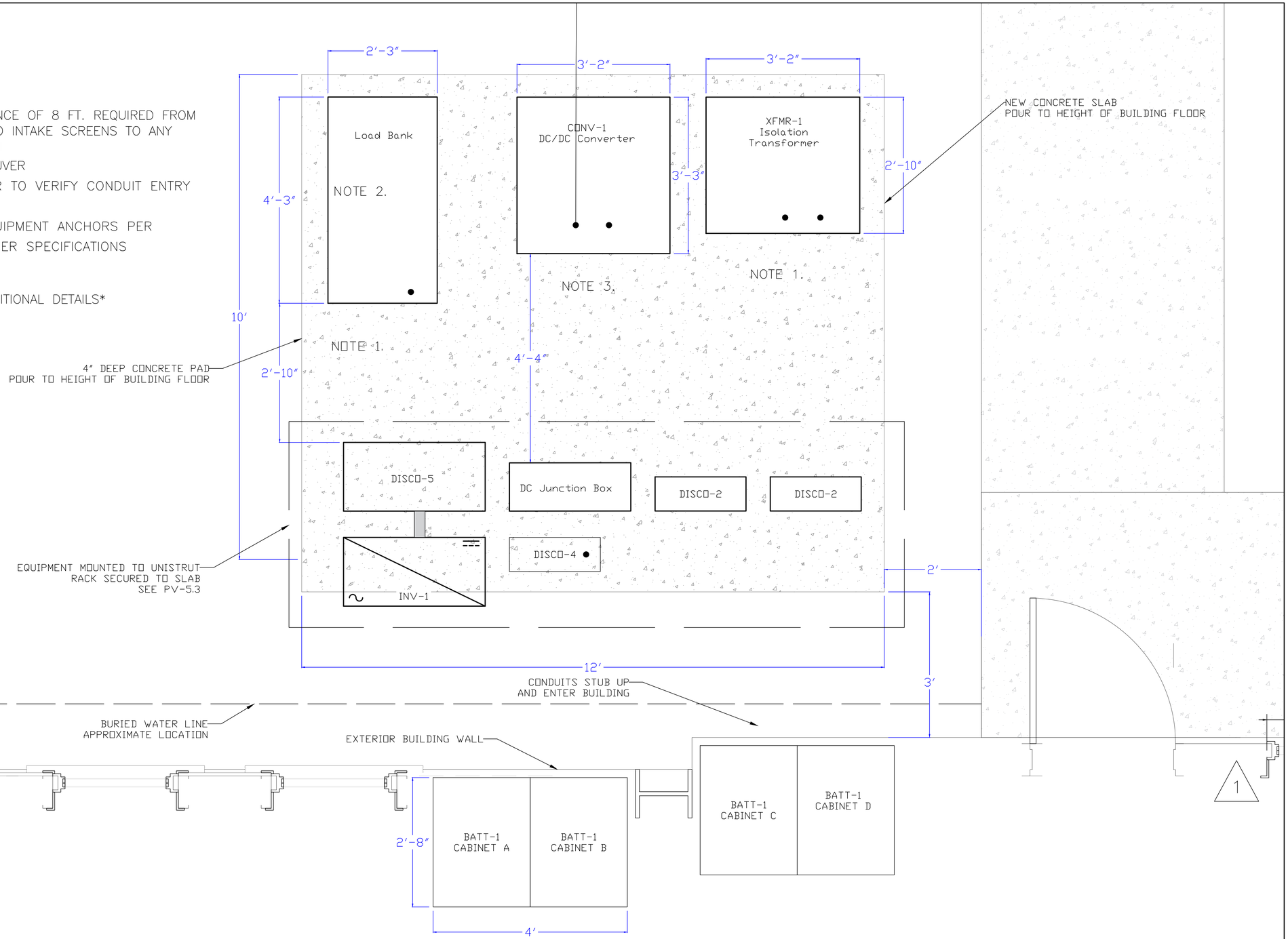

PRELIMINARY – NOT FOR CONSTRUCTION

Pad Layout

SOLAR ALTERNATIVES

5804 River Oaks Rd S
Elmwood, LA 70123
1-504-267-1660

General Notes

MICROGRID SYSTEM
WITH GROUND MOUNT PV

TABLE OF CONTENTS

PV-1.0 COVER PAGE
PV-1.1 GENERAL NOTES
PV-1.2 REFERENCE
PV-2.0 SITE PLAN
PV-3.0 SOLAR PLAN
PV-3.1 STRING PLAN
PV-3.2 SOLAR COMPONENTS
PV-3.3 SOLAR COMPONENTS
PV-3.4 SOLAR COMPONENTS
PV-5.0 EQUIPMENT PLAN
PV-5.1 PAD LAYOUT
PV-5.2 PAD DETAILS
PV-5.3 EQUIPMENT ROOM DETAIL
PV-5.4 EQUIPMENT ROOM ELEVATION
PV-5.5 EQUIPMENT ROOM ELEVATION
PV-5.6 EQUIPMENT ROOM ELEVATION
PV-5.7 OUTDOOR WALL ELEVATION
PV-6.0 ELECTRICAL DIAGRAM
PV-7.0 ELECTRICAL CALCULATIONS
PV-8.0 COMMUNICATIONS DIAGRAM
PV-9.0 PANELBOARDS
PV-10.0 EQUIPMENT DATA SHEETS

Revisions		
No.	Issue	Date
110822	REVIEW	
120222	REVIEW	
121222	REVIEW	
122022	REVIEW	

Project Name and Address

UNIVERSITY OF LOUISIANA AT LAFAYETTE-CLECO POWER
2008 HUTCHINSON AVE
CROWLEY, LA 70526

Drawn By: Andrea Lee, Nick Boyd	Sheet: PV-5.1
Date: 09/15/2022	
Scale: N/A	

CONFIDENTIALITY NOTICE: These plans and any documents transmitted with them may contain PRIVILEGED or CONFIDENTIAL information and may be read or used only by the intended recipient. If you are not the intended recipient, please be advised that you have received this in error and that any unauthorized review, distribution, printing, or copying of these Plans or any attached files is strictly prohibited.

CONDUIT PLAN

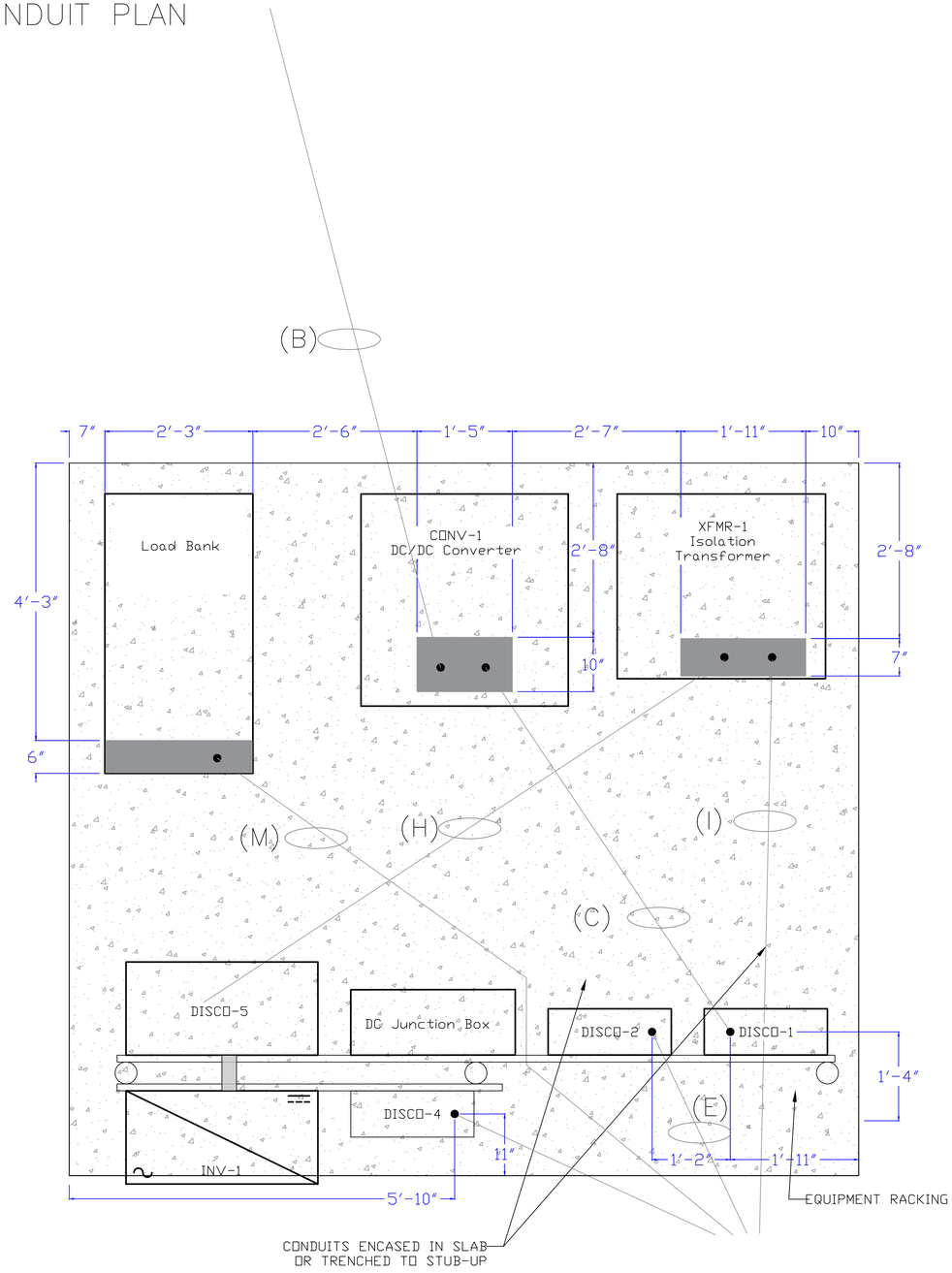

EQUIPMENT RACK ELEVATION

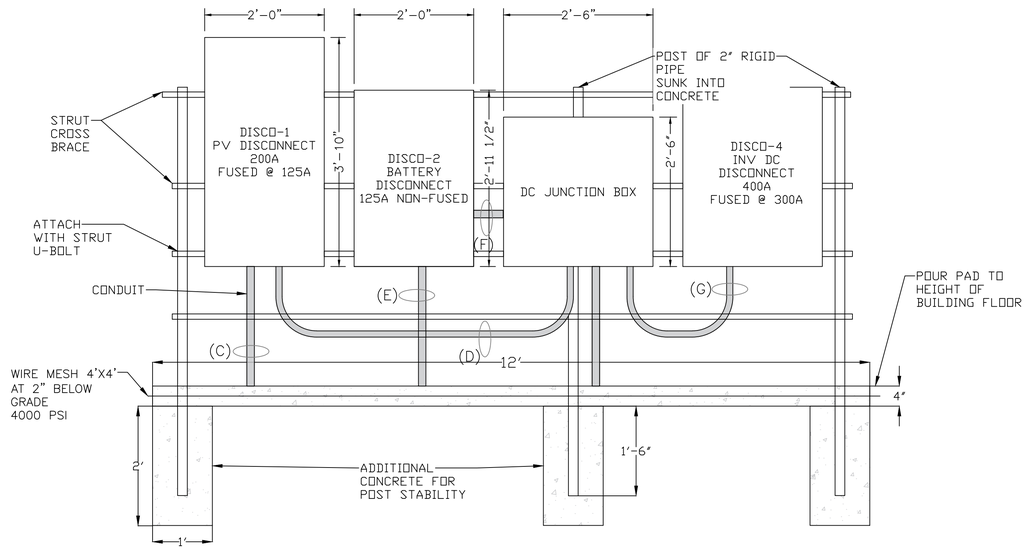

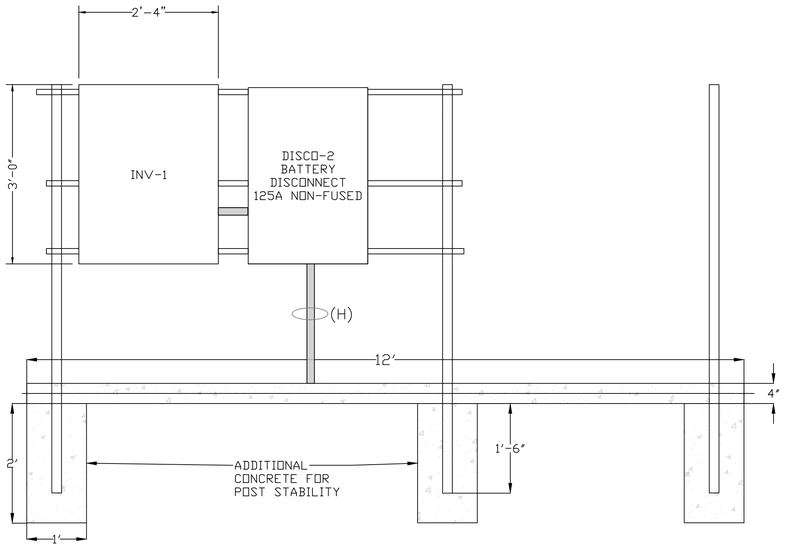

SOLAR ALTERNATIVES

5804 River Oaks Rd S
Elmwood, LA 70123
1-504-267-1660

General Notes

MICROGRID SYSTEM
WITH GROUND MOUNT PV

TABLE OF CONTENTS

PV-1.0 COVER PAGE
PV-1.1 GENERAL NOTES
PV-1.2 REFERENCE
PV-2.0 SITE PLAN
PV-3.0 SOLAR PLAN
PV-3.1 STRING PLAN
PV-3.2 SOLAR COMPONENTS
PV-3.3 SOLAR COMPONENTS
PV-3.4 SOLAR COMPONENTS
PV-5.0 EQUIPMENT PLAN
PV-5.1 PAD LAYOUT
PV-5.2 PAD DETAILS
PV-5.3 EQUIPMENT ROOM DETAIL
PV-5.4 EQUIPMENT ROOM ELEVATION
PV-5.5 EQUIPMENT ROOM ELEVATION
PV-5.6 EQUIPMENT ROOM ELEVATION
PV-5.7 OUTDOOR WALL ELEVATION
PV-6.0 ELECTRICAL DIAGRAM
PV-7.0 ELECTRICAL CALCULATIONS
PV-8.0 COMMUNICATIONS DIAGRAM
PV-9.0 PANELBOARDS
PV-10.0 EQUIPMENT DATA SHEETS

Revisions		
No.	Issue	Date
110822	REVIEW	
120222	REVIEW	
121222	REVIEW	
122022	REVIEW	

Project Name and Address

UNIVERSITY OF LOUISIANA AT
LAFAYETTE-CLECO POWER
2008 HUTCHINSON AVE
CROWLEY, LA 70526

Drawn By: Andrea Lee, Nick Boyd	Sheet: PV-5.2
Date: 09/15/2022	
Scale: N/A	

CONFIDENTIALITY NOTICE: These plans and any documents transmitted with them may contain PRIVILEGED or CONFIDENTIAL information and may be read or used only by the intended recipient. If you are not the intended recipient, please be advised that you have received this in error and that any unauthorized review, distribution, printing, or copying of these Plans or any attached files is strictly prohibited.

PAD DETAILS

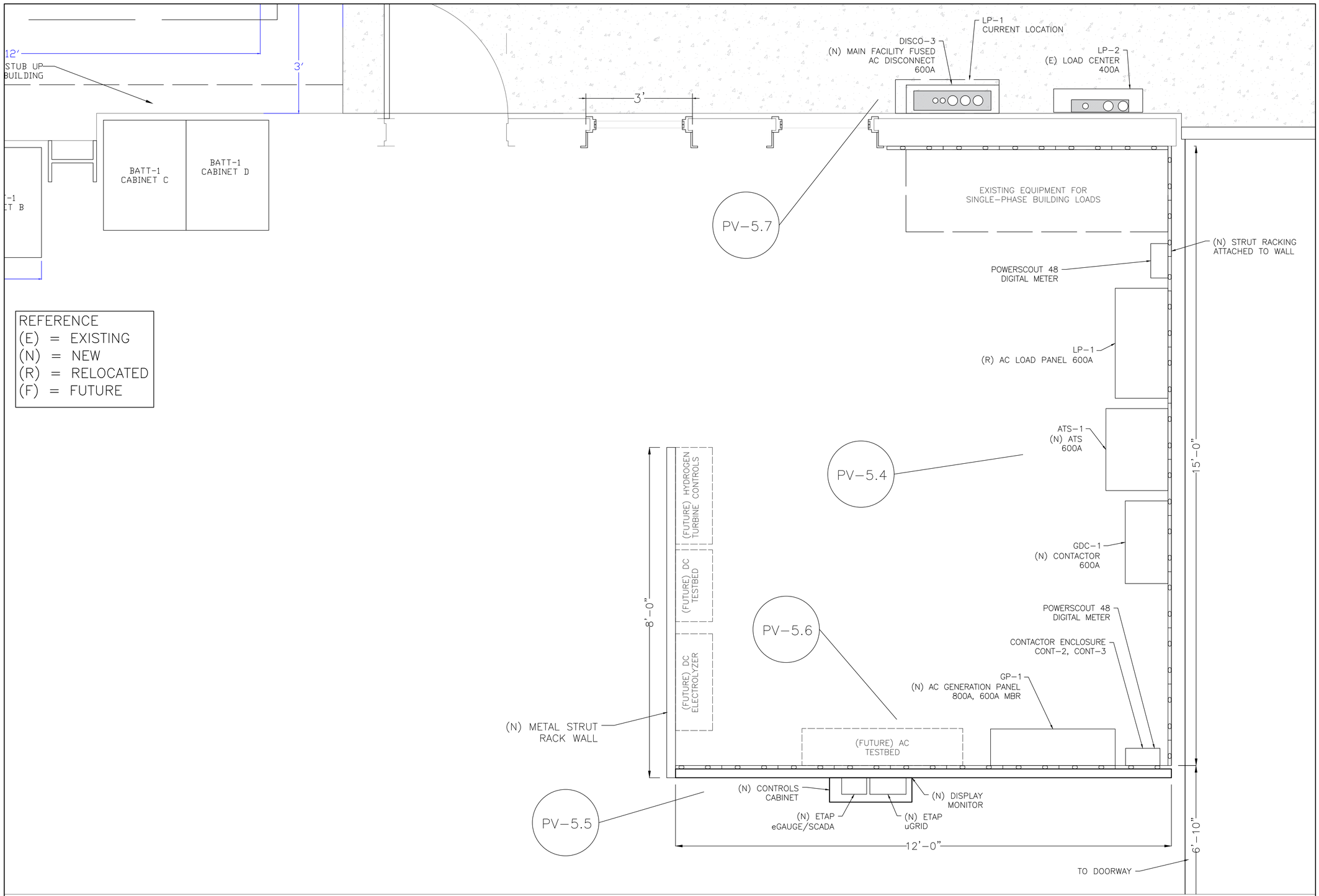

REFERENCE
(E) = EXISTING
(N) = NEW
(R) = RELOCATED
(F) = FUTURE

PRELIMINARY – NOT FOR CONSTRUCTION

Equipment Room Detail

SOLAR ALTERNATIVES
5804 River Oaks Rd S
Elmwood, LA 70123
1-504-267-1660

General Notes

MICROGRID SYSTEM
WITH GROUND MOUNT PV

TABLE OF CONTENTS

PV-1.0 COVER PAGE
PV-1.1 GENERAL NOTES
PV-1.2 REFERENCE
PV-2.0 SITE PLAN
PV-3.0 SOLAR PLAN
PV-3.1 STRING PLAN
PV-3.2 SOLAR COMPONENTS
PV-3.3 SOLAR COMPONENTS
PV-3.4 SOLAR COMPONENTS
PV-5.0 EQUIPMENT PLAN
PV-5.1 PAD LAYOUT
PV-5.2 PAD DETAILS
PV-5.3 EQUIPMENT ROOM DETAIL
PV-5.4 EQUIPMENT ROOM ELEVATION
PV-5.5 EQUIPMENT ROOM ELEVATION
PV-5.6 EQUIPMENT ROOM ELEVATION
PV-5.7 OUTDOOR WALL ELEVATION
PV-6.0 ELECTRICAL DIAGRAM
PV-7.0 ELECTRICAL CALCULATIONS
PV-8.0 COMMUNICATIONS DIAGRAM
PV-9.0 PANELBOARDS
PV-10.0 EQUIPMENT DATA SHEETS

Revisions		
No.	Issue	Date
110822	REVIEW	
120222	REVIEW	
121222	REVIEW	
122022	REVIEW	

Project Name and Address

UNIVERSITY OF LOUISIANA AT LAFAYETTE–CLECO POWER
2008 HUTCHINSON AVE
CROWLEY, LA 70526

Drawn By: Andrea Lee, Nick Boyd	Sheet: PV-5.3
Date: 09/15/2022	
Scale: N/A	

CONFIDENTIALITY NOTICE: These plans and any documents transmitted with them may contain PRIVILEGED or CONFIDENTIAL information and may be read or used only by the intended recipient. If you are not the intended recipient, please be advised that you have received this in error and that any unauthorized review, distribution, printing, or copying of these Plans or any attached files is strictly prohibited.

EAST WALL

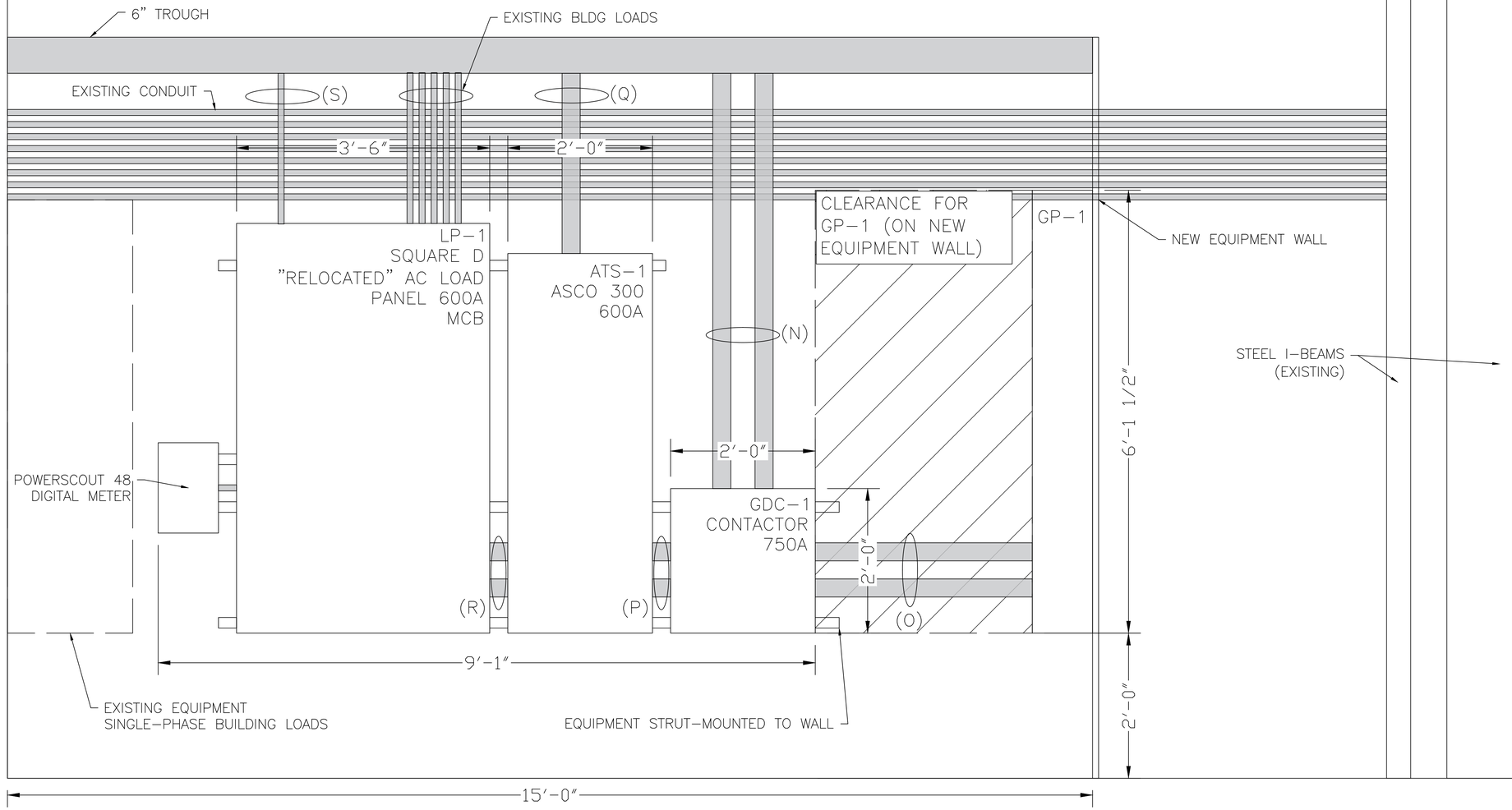

PRELIMINARY – NOT FOR CONSTRUCTION

Equipment Room Elevation

SOLAR ALTERNATIVES

5804 River Oaks Rd S
Elmwood, LA 70123
1-504-267-1660

General Notes

MICROGRID SYSTEM
WITH GROUND MOUNT PV

TABLE OF CONTENTS

PV-1.0 COVER PAGE
PV-1.1 GENERAL NOTES
PV-1.2 REFERENCE
PV-2.0 SITE PLAN
PV-3.0 SOLAR PLAN
PV-3.1 STRING PLAN
PV-3.2 SOLAR COMPONENTS
PV-3.3 SOLAR COMPONENTS
PV-3.4 SOLAR COMPONENTS
PV-5.0 EQUIPMENT PLAN
PV-5.1 PAD LAYOUT
PV-5.2 PAD DETAILS
PV-5.3 EQUIPMENT ROOM DETAIL
PV-5.4 EQUIPMENT ROOM ELEVATION
PV-5.5 EQUIPMENT ROOM ELEVATION
PV-5.6 EQUIPMENT ROOM ELEVATION
PV-5.7 OUTDOOR WALL ELEVATION
PV-6.0 ELECTRICAL DIAGRAM
PV-7.0 ELECTRICAL CALCULATIONS
PV-8.0 COMMUNICATIONS DIAGRAM
PV-9.0 PANELBOARDS
PV-10.0 EQUIPMENT DATA SHEETS

Revisions		
No.	Issue	Date
110822	REVIEW	
120222	REVIEW	
121222	REVIEW	
122022	REVIEW	

Project Name and Address

UNIVERSITY OF LOUISIANA AT
LAFAYETTE-CLECO POWER
2008 HUTCHINSON AVE
CROWLEY, LA 70526

Drawn By: Andrea Lee, Nick Boyd	Sheet: PV-5.4
Date: 09/15/2022	
Scale: N/A	

CONFIDENTIALITY NOTICE: These plans and any documents transmitted with them may contain PRIVILEGED and CONFIDENTIAL information. This information is intended only for the use of the individual or entity named above. If you are the intended recipient, you are advised that you have received this in error and that any unauthorized review, distribution, printing, or copying of these Plans or any attached files is strictly prohibited.

NEW EQUIPMENT WALL (SOUTH SIDE)

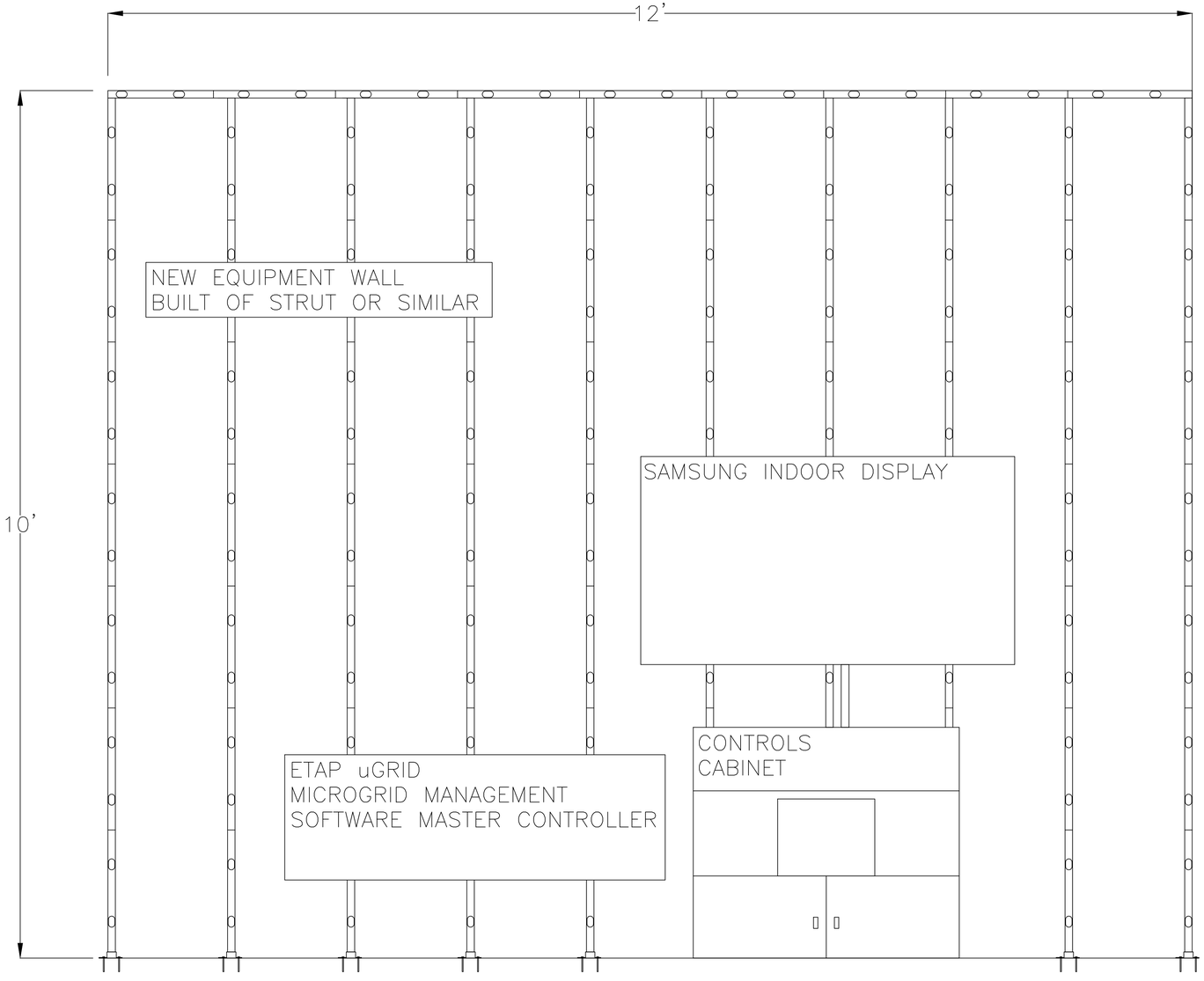

PRELIMINARY – NOT FOR CONSTRUCTION

Equipment Room Elevation

SOLAR ALTERNATIVES

5804 River Oaks Rd S
Elmwood, LA 70123
1–504–267–1660

General Notes

MICROGRID SYSTEM
WITH GROUND MOUNT PV

TABLE OF CONTENTS

PV–1.0 COVER PAGE
PV–1.1 GENERAL NOTES
PV–1.2 REFERENCE
PV–2.0 SITE PLAN
PV–3.0 SOLAR PLAN
PV–3.1 STRING PLAN
PV–3.2 SOLAR COMPONENTS
PV–3.3 SOLAR COMPONENTS
PV–3.4 SOLAR COMPONENTS
PV–5.0 EQUIPMENT PLAN
PV–5.1 PAD LAYOUT
PV–5.2 PAD DETAILS
PV–5.3 EQUIPMENT ROOM DETAIL
PV–5.4 EQUIPMENT ROOM ELEVATION
PV–5.5 EQUIPMENT ROOM ELEVATION
PV–5.6 EQUIPMENT ROOM ELEVATION
PV–5.7 OUTDOOR WALL ELEVATION
PV–6.0 ELECTRICAL DIAGRAM
PV–7.0 ELECTRICAL CALCULATIONS
PV–8.0 COMMUNICATIONS DIAGRAM
PV–9.0 PANELBOARDS
PV–10.0 EQUIPMENT DATA SHEETS

Revisions		
No.	Issue	Date
110822	REVIEW	
120222	REVIEW	
121222	REVIEW	
122022	REVIEW	

Project Name and Address

UNIVERSITY OF LOUISIANA AT
LAFAYETTE–CLECO POWER
2008 HUTCHINSON AVE
CROWLEY, LA 70526

Drawn By Andrea Lee, Nick Boyd	Sheet PV–5.5
Date 09/15/2022	
Scale N/A	

CONFIDENTIALITY NOTICE: These plans and any documents transmitted with them may contain PRIVILEGED or CONFIDENTIAL information and may be read or used only by the intended recipient. If you are not the intended recipient, please be advised that you have received this in error and that any unauthorized review, distribution, printing, or copying of these Plans or any attached files is strictly prohibited.

NEW EQUIPMENT WALL (NORTH SIDE)

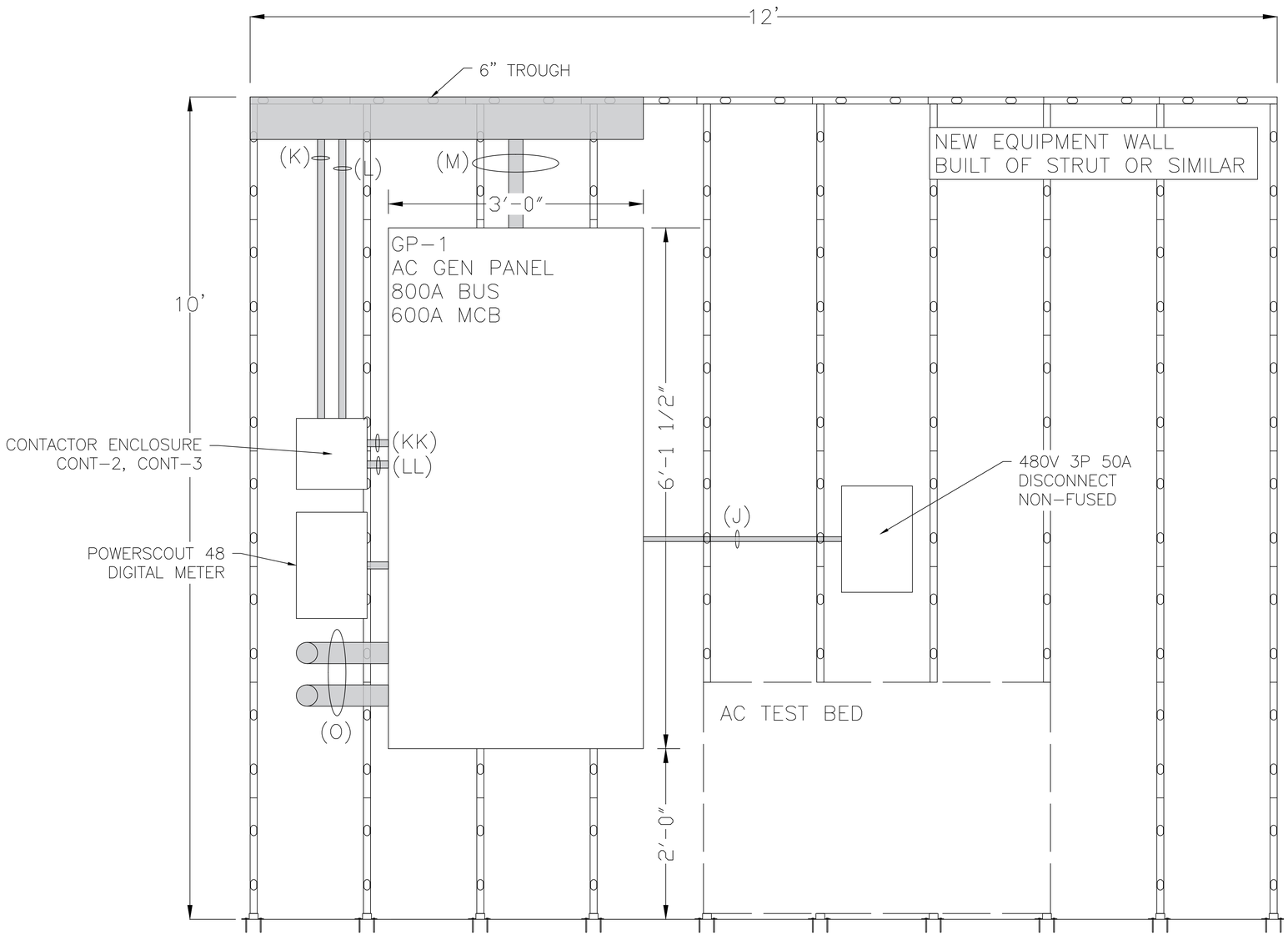

PRELIMINARY – NOT FOR CONSTRUCTION

Equipment Room Elevation

SOLAR ALTERNATIVES

5804 River Oaks Rd S
Elmwood, LA 70123
1-504-267-1660

General Notes

MICROGRID SYSTEM
WITH GROUND MOUNT PV

TABLE OF CONTENTS

PV-1.0 COVER PAGE
PV-1.1 GENERAL NOTES
PV-1.2 REFERENCE
PV-2.0 SITE PLAN
PV-3.0 SOLAR PLAN
PV-3.1 STRING PLAN
PV-3.2 SOLAR COMPONENTS
PV-3.3 SOLAR COMPONENTS
PV-3.4 SOLAR COMPONENTS
PV-5.0 EQUIPMENT PLAN
PV-5.1 PAD LAYOUT
PV-5.2 PAD DETAILS
PV-5.3 EQUIPMENT ROOM DETAIL
PV-5.4 EQUIPMENT ROOM ELEVATION
PV-5.5 EQUIPMENT ROOM ELEVATION
PV-5.6 EQUIPMENT ROOM ELEVATION
PV-5.7 OUTDOOR WALL ELEVATION
PV-6.0 ELECTRICAL DIAGRAM
PV-7.0 ELECTRICAL CALCULATIONS
PV-8.0 COMMUNICATIONS DIAGRAM
PV-9.0 PANELBOARDS
PV-10.0 EQUIPMENT DATA SHEETS

Revisions		
No.	Issue	Date
110822	REVIEW	
120222	REVIEW	
121222	REVIEW	
122022	REVIEW	

Project Name and Address

UNIVERSITY OF LOUISIANA AT
LAFAYETTE-CLECO POWER
2008 HUTCHINSON AVE
CROWLEY, LA 70526

Drawn By: Andrea Lee, Nick Boyd	Sheet: PV-5.6
Date: 09/15/2022	
Scale: N/A	

CONFIDENTIALITY NOTICE: These plans and any documents transmitted with them may contain PRIVILEGED or CONFIDENTIAL information and may be read or used only by the intended recipient. If you are not the intended recipient, please be advised that you have received this in error and that any unauthorized review, distribution, printing, or copying of these Plans or any attached files is strictly prohibited.

OUTDOOR WALL

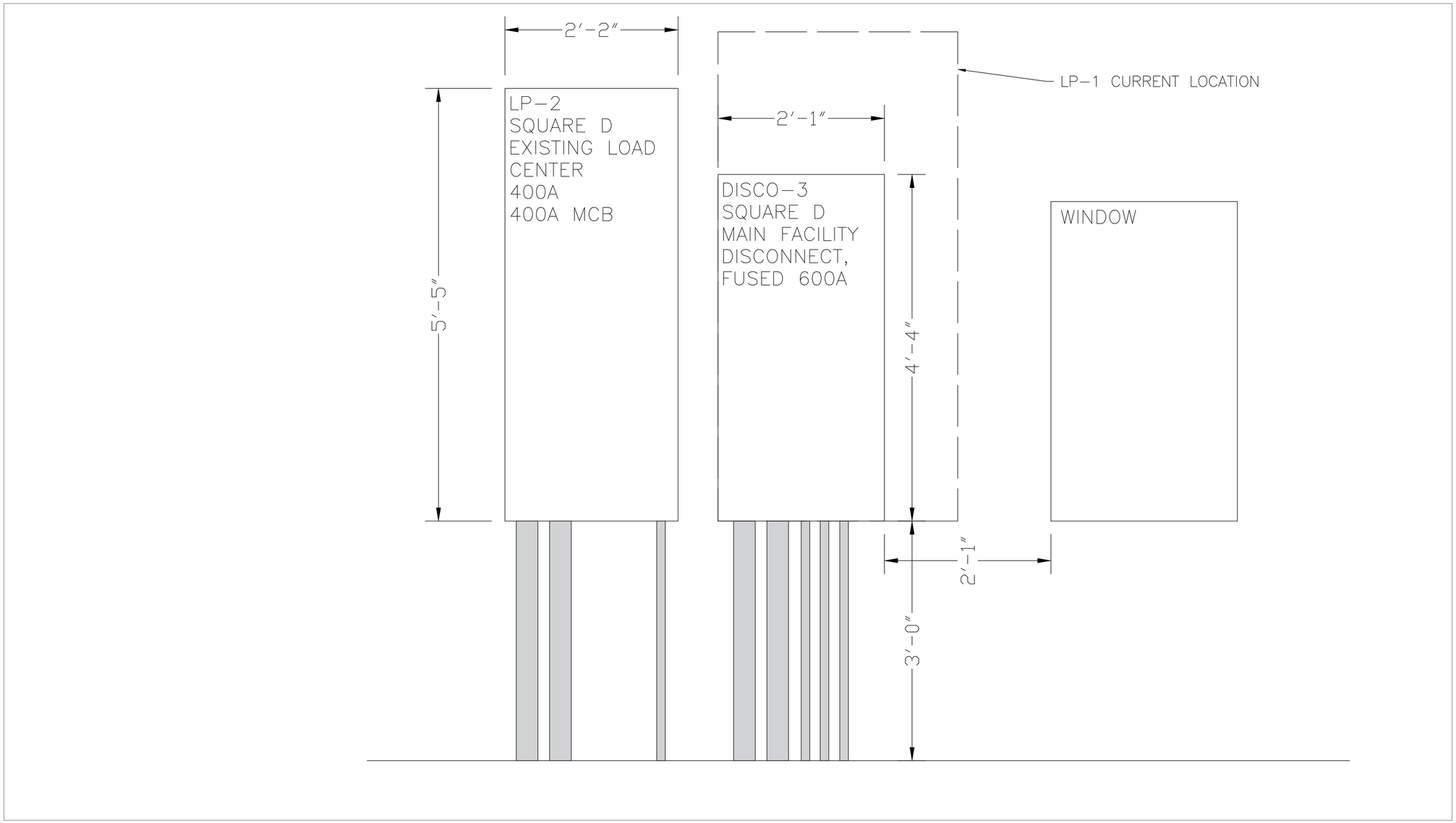

PRELIMINARY – NOT FOR CONSTRUCTION

Equipment Room Elevation

SOLAR ALTERNATIVES

5804 River Oaks Rd S
Elmwood, LA 70123
1-504-267-1660

General Notes

MICROGRID SYSTEM
WITH GROUND MOUNT PV

TABLE OF CONTENTS

PV-1.0 COVER PAGE
PV-1.1 GENERAL NOTES
PV-1.2 REFERENCE
PV-2.0 SITE PLAN
PV-3.0 SOLAR PLAN
PV-3.1 STRING PLAN
PV-3.2 SOLAR COMPONENTS
PV-3.3 SOLAR COMPONENTS
PV-3.4 SOLAR COMPONENTS
PV-5.0 EQUIPMENT PLAN
PV-5.1 PAD LAYOUT
PV-5.2 PAD DETAILS
PV-5.3 EQUIPMENT ROOM DETAIL
PV-5.4 EQUIPMENT ROOM ELEVATION
PV-5.5 EQUIPMENT ROOM ELEVATION
PV-5.6 EQUIPMENT ROOM ELEVATION
PV-5.7 OUTDOOR WALL ELEVATION
PV-6.0 ELECTRICAL DIAGRAM
PV-7.0 ELECTRICAL CALCULATIONS
PV-8.0 COMMUNICATIONS DIAGRAM
PV-9.0 PANELBOARDS
PV-10.0 EQUIPMENT DATA SHEETS

Revisions		
No.	Issue	Date
110822	REVIEW	
120222	REVIEW	
121222	REVIEW	
122022	REVIEW	

Project Name and Address

UNIVERSITY OF LOUISIANA AT
LAFAYETTE-CLECO POWER
2008 HUTCHINSON AVE
CROWLEY, LA 70526

Drawn By: Andrea Lee, Nick Boyd	Sheet: PV-5.7
Date: 09/15/2022	
Scale: N/A	

CONFIDENTIALITY NOTICE: These plans and any documents transmitted with them may contain PRIVILEGED or CONFIDENTIAL information and may be read or used only by the intended recipient. If you are not the intended recipient, please be advised that you have received this in error and that any unauthorized review, distribution, printing, or copying of these Plans or any attached files is strictly prohibited.

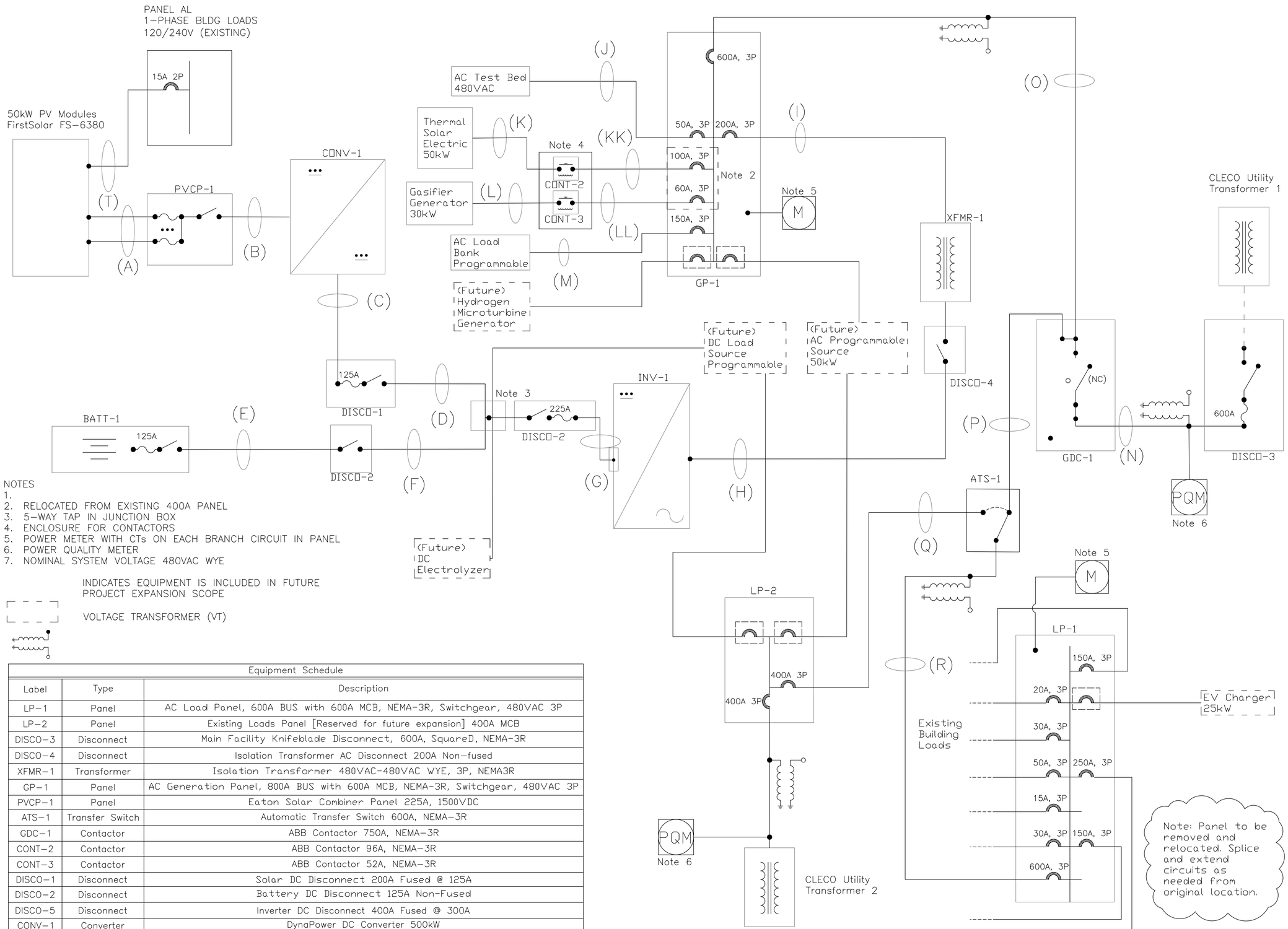

NOTES
1.
2. RELOCATED FROM EXISTING 400A PANEL
3. 5-WAY TAP IN JUNCTION BOX
4. ENCLOSURE FOR CONTACTORS
5. POWER METER WITH CTs ON EACH BRANCH CIRCUIT IN PANEL
6. POWER QUALITY METER
7. NOMINAL SYSTEM VOLTAGE 480VAC WYE

INDICATES EQUIPMENT IS INCLUDED IN FUTURE PROJECT EXPANSION SCOPE

VOLTAGE TRANSFORMER (VT)

Equipment Schedule		
Label	Type	Description
LP-1	Panel	AC Load Panel, 600A BUS with 600A MCB, NEMA-3R, Switchgear, 480VAC 3P
LP-2	Panel	Existing Loads Panel [Reserved for future expansion] 400A MCB
DISCO-3	Disconnect	Main Facility Knifeblade Disconnect, 600A, SquareD, NEMA-3R
DISCO-4	Disconnect	Isolation Transformer AC Disconnect 200A Non-fused
XFMR-1	Transformer	Isolation Transformer 480VAC-480VAC WYE, 3P, NEMA3R
GP-1	Panel	AC Generation Panel, 800A BUS with 600A MCB, NEMA-3R, Switchgear, 480VAC 3P
PVCP-1	Panel	Eaton Solar Combiner Panel 225A, 1500VDC
ATS-1	Transfer Switch	Automatic Transfer Switch 600A, NEMA-3R
GDC-1	Contactor	ABB Contactor 750A, NEMA-3R
CONT-2	Contactor	ABB Contactor 96A, NEMA-3R
CONT-3	Contactor	ABB Contactor 52A, NEMA-3R
DISCO-1	Disconnect	Solar DC Disconnect 200A Fused @ 125A
DISCO-2	Disconnect	Battery DC Disconnect 125A Non-Fused
DISCO-5	Disconnect	Inverter DC Disconnect 400A Fused @ 300A
CONV-1	Converter	DynaPower DC Converter 500kW
INV-1	Inverter	DynaPower Bi-Directional Inverter 125kW, 480VAC
BATT-1	Battery	Blue Planet Battery 128 kWH

Electrical Diagram

SOLAR ALTERNATIVES
5804 River Oaks Rd S
Elmwood, LA 70123
1-504-267-1660

General Notes

MICROGRID SYSTEM
WITH GROUND MOUNT PV

TABLE OF CONTENTS

PV-1.0 COVER PAGE
PV-1.1 GENERAL NOTES
PV-1.2 REFERENCE
PV-2.0 SITE PLAN
PV-3.0 SOLAR PLAN
PV-3.1 STRING PLAN
PV-3.2 SOLAR COMPONENTS
PV-3.3 SOLAR COMPONENTS
PV-3.4 SOLAR COMPONENTS
PV-5.0 EQUIPMENT PLAN
PV-5.1 PAD LAYOUT
PV-5.2 PAD DETAILS
PV-5.3 EQUIPMENT ROOM DETAIL
PV-5.4 EQUIPMENT ROOM ELEVATION
PV-5.5 EQUIPMENT ROOM ELEVATION
PV-5.6 EQUIPMENT ROOM ELEVATION
PV-5.7 OUTDOOR WALL ELEVATION
PV-6.0 ELECTRICAL DIAGRAM
PV-7.0 ELECTRICAL CALCULATIONS
PV-8.0 COMMUNICATIONS DIAGRAM
PV-9.0 PANELBOARDS
PV-10.0 EQUIPMENT DATA SHEETS

Revisions		
No.	Issue	Date
110822	REVIEW	
120222	REVIEW	
121222	REVIEW	
122022	REVIEW	

Project Name and Address

UNIVERSITY OF LOUISIANA AT LAFAYETTE-CLECO POWER
2008 HUTCHINSON AVE
CROWLEY, LA 70526

Drawn By: Andrea Lee, Nick Boyd	Sheet: PV-6.0
Date: 09/15/2022	
Scale: N/A	

CONFIDENTIALITY NOTICE: These plans and any documents transmitted with them may contain PRIVILEGED or CONFIDENTIAL information and may be read or used only by the intended recipient. If you are not the intended recipient, please be advised that you have received this in error and that any unauthorized review, distribution, printing, or copying of these Plans or any attached files is strictly prohibited.

Module Specifications: First Solar FS-6380A	
Nominal Power	380 W
TEMP CoEFF (VOC)	-0.35 %/°C
VMP	171.6 V
IMP	2.21 A
VOC	213.8 V
ISC	2.48 A
Height	79"
Width	49"
Depth	2"
Max Series Fuse	6 A
Max System Volt	1500 V

Inverter Specifications:	Dynapower MPS-125
Max DC Input Power	125 kW
Max DC Input Current	171 A
Max AC Output Power	125 kW
AC Output Current	80 A
Max DC Voltage	1500 V
DC Operating Voltage	740-1500 V
AC Nominal Voltage	480 VAC 3-Ph

String Max Voltage Calculation:

Voc temperature adjustment at -4°C =
1 - [βVoc * ΔT]/100
1 - [-0.35 %/°C * (25°C-(-4°C))]/100
1.0928

Voc @ -4°C =
Voc @ 25°C * temp adjustment factor
213.8 V * 1.0928
233.6406 V

Max String Length =
Max Voltage / Temp adjusted Voc
1500 V / 233.64 V
6.4 Modules = 6 Modules

Wire Schedule

Tag	Set	Qty	FLA	OCPD (A)	Size	Type	Ground	V	Length (ft)	Voltage Drop (%)	Conduit	Notes
A	21	22	7	10	CU #12	PV Wire	CU #12	1500	25-300	1.11	Free air	
B	1	2	93		CU 2/0	XHHW-2	CU #8	1500	550	0.59	2" PVC	
C	1	2	85	90	CU #2	XHHW-2	CU #8	1000	15		1" EMT	
D	1	2	85	90	CU #2	XHHW-2	CU #8	1000	15		1" EMT	
E	1	2	150	125	CU #1	XHHW-2	CU #6	1000	30		1-1/4" EMT	
F	1	2	125	125	CU #1	XHHW-2	CU #6	1000	30		1-1/4" EMT	
G	1	2	215	225	CU 4/0	XHHW-2	CU #4	1000	10		2" EMT	
H	1	3	200	200	CU 2/0	THHN	CU #6	480	30		2" EMT	
I	1	3	200	200	CU 2/0	THHN	CU #6	480	100		2" EMT	
J	1	4	50	50	CU #8	THHN	CU #10	480	50		3/4" EMT	
K	1	4	100	100	CU #2	THHN	CU #8	480	300		1" EMT	Note 1
KK	1	4	100	100	CU #2	THHN	CU #8	480	5		1" EMT	
L	1	4	60	60	CU #6	THHN	CU #10	480	200		1" EMT	Note 1
LL	1	4	60	60	CU #6	THHN	CU #10	480	5		1" EMT	
M	1	4	150	150	CU 2/0	THHN	CU #6	480	100		2" EMT	
N	3	4	600	600	CU 3/0	THHN	CU #1	480	10		(2) 3" EMT	
O	3	4	600	600	CU 3/0	THHN	CU #1	480	40		(2) 3" EMT	
P	3	4	600	600	CU 3/0	THHN	CU #1	480	15		(2) 3" EMT	
Q	2	4	400	400	CU 3/0	THHN	CU #2	480	40		3" EMT	
R	3	4	600	600	CU 3/0	THHN	CU #1	480	20		(2) 3" EMT	
T	1	3	7	15	CU #8	THHN	CU #12	240	550	2.57	2" PVC	

Notes
1. EXISTING CONDUCTORS. EXTEND FEEDERS TO RELOCATE BREAKERS TO NEW PANEL. MATCH NEW CONDUCTORS & CONDUIT TO EXISTING

Electrical Calculations

SOLAR ALTERNATIVES
5804 River Oaks Rd S
Elmwood, LA 70123
1-504-267-1660

General Notes

MICROGRID SYSTEM
WITH GROUND MOUNT PV

TABLE OF CONTENTS
PV-1.0 COVER PAGE
PV-1.1 GENERAL NOTES
PV-1.2 REFERENCE
PV-2.0 SITE PLAN
PV-3.0 SOLAR PLAN
PV-3.1 STRING PLAN
PV-3.2 SOLAR COMPONENTS
PV-3.3 SOLAR COMPONENTS
PV-3.4 SOLAR COMPONENTS
PV-5.0 EQUIPMENT PLAN
PV-5.1 PAD LAYOUT
PV-5.2 PAD DETAILS
PV-5.3 EQUIPMENT ROOM DETAIL
PV-5.4 EQUIPMENT ROOM ELEVATION
PV-5.5 EQUIPMENT ROOM ELEVATION
PV-5.6 EQUIPMENT ROOM ELEVATION
PV-5.7 OUTDOOR WALL ELEVATION
PV-6.0 ELECTRICAL DIAGRAM
PV-7.0 ELECTRICAL CALCULATIONS
PV-8.0 COMMUNICATIONS DIAGRAM
PV-9.0 PANELBOARDS
PV-10.0 EQUIPMENT DATA SHEETS

Revisions		
No.	Issue	Date
110822	REVIEW	
120222	REVIEW	
121222	REVIEW	
122022	REVIEW	

Project Name and Address

UNIVERSITY OF LOUISIANA AT
LAFAYETTE-CLECO POWER
2008 HUTCHINSON AVE
CROWLEY, LA 70526

Drawn By: Andrea Lee, Nick Boyd
Date: 09/15/2022
Scale: N/A
Sheet: PV-7.0

CONFIDENTIALITY NOTICE: These plans and any documents transmitted with them may contain PRIVILEGED or CONFIDENTIAL information and may be read or used only by the intended recipient. If you are not the intended recipient, please be advised that you have received this in error and that any unauthorized review, distribution, printing, or copying of these Plans or any attached files is strictly prohibited.

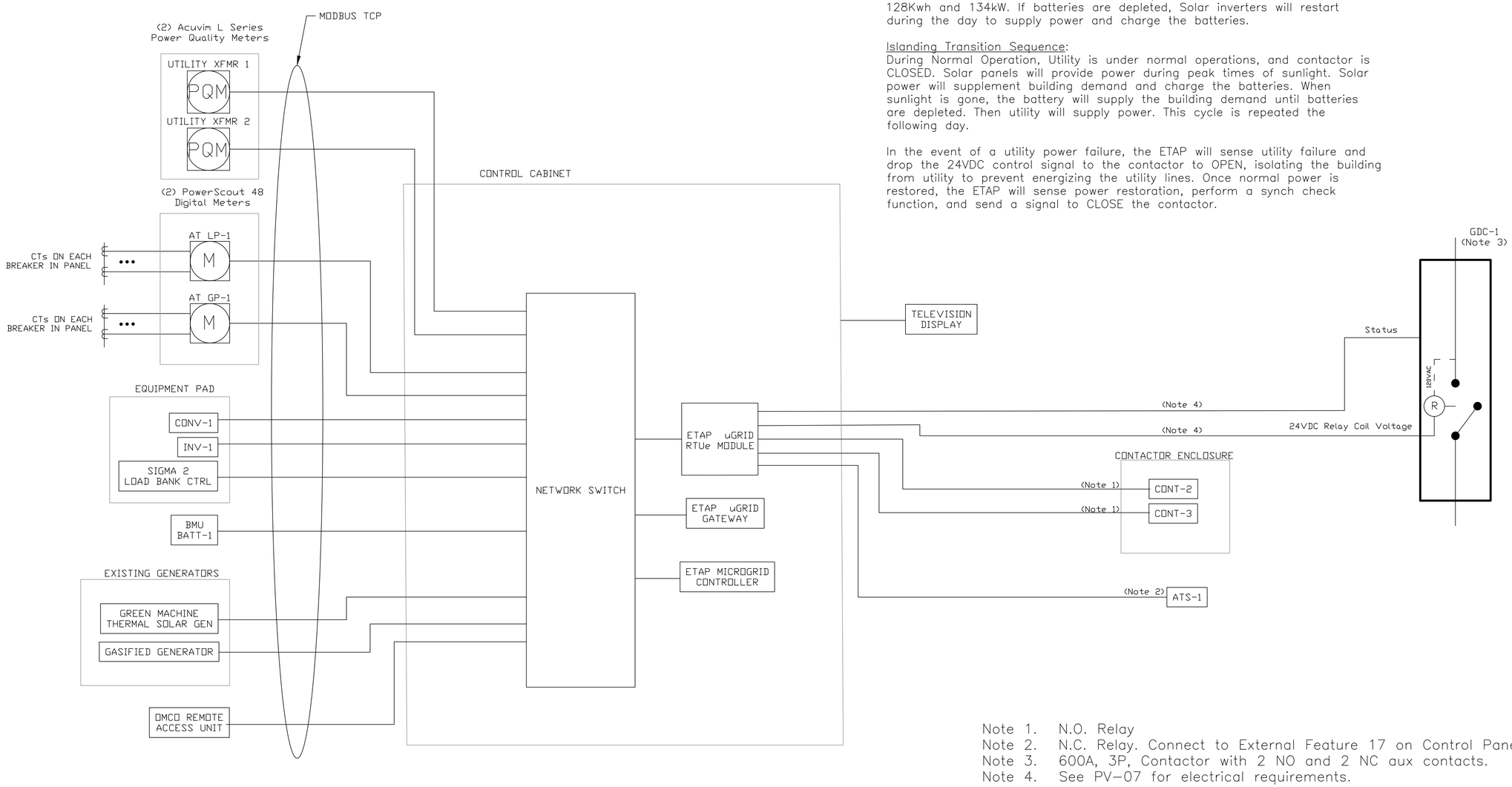

On Grid Operation: During the daytime, the Solar power will supplement utility power to feed the building demand. Batteries will be tied to the system for charging during daytime hours. When Solar power is unavailable, stored battery power will supplement building demand. Once battery power is depleted, utility power will supply the building demand load. Cycle is repeated when sun rises the following day. In this operation, a 24VDC signal will hold the contactor in the CLOSED position.

Off Grid Operation: In the event of utility failure, the ETAP will sense utility failure and will drop the 24VDC signal and OPEN the contactor preventing utility back feed. The building will be supplied from solar inverters and the batteries until and unless batteries are depleted. Batteries are rated for 128Kwh and 134kW. If batteries are depleted, Solar inverters will restart during the day to supply power and charge the batteries.

Islanding Transition Sequence:
During Normal Operation, Utility is under normal operations, and contactor is CLOSED. Solar panels will provide power during peak times of sunlight. Solar power will supplement building demand and charge the batteries. When sunlight is gone, the battery will supply the building demand until batteries are depleted. Then utility will supply power. This cycle is repeated the following day.

In the event of a utility power failure, the ETAP will sense utility failure and drop the 24VDC control signal to the contactor to OPEN, isolating the building from utility to prevent energizing the utility lines. Once normal power is restored, the ETAP will sense power restoration, perform a synch check function, and send a signal to CLOSE the contactor.

Note 1. N.O. Relay
Note 2. N.C. Relay. Connect to External Feature 17 on Control Panel
Note 3. 600A, 3P, Contactor with 2 NO and 2 NC aux contacts.
Note 4. See PV-07 for electrical requirements.

PRELIMINARY - NOT FOR CONSTRUCTION

Communications Diagram

SOLAR ALTERNATIVES
5804 River Oaks Rd S
Elmwood, LA 70123
1-504-267-1660

General Notes

MICROGRID SYSTEM
WITH GROUND MOUNT PV

TABLE OF CONTENTS

PV-1.0 COVER PAGE
PV-1.1 GENERAL NOTES
PV-1.2 REFERENCE
PV-2.0 SITE PLAN
PV-3.0 SOLAR PLAN
PV-3.1 STRING PLAN
PV-3.2 SOLAR COMPONENTS
PV-3.3 SOLAR COMPONENTS
PV-3.4 SOLAR COMPONENTS
PV-5.0 EQUIPMENT PLAN
PV-5.1 PAD LAYOUT
PV-5.2 PAD DETAILS
PV-5.3 EQUIPMENT ROOM DETAIL
PV-5.4 EQUIPMENT ROOM ELEVATION
PV-5.5 EQUIPMENT ROOM ELEVATION
PV-5.6 EQUIPMENT ROOM ELEVATION
PV-5.7 OUTDOOR WALL ELEVATION
PV-6.0 ELECTRICAL DIAGRAM
PV-7.0 ELECTRICAL CALCULATIONS
PV-8.0 COMMUNICATIONS DIAGRAM
PV-9.0 PANELBOARDS
PV-10.0 EQUIPMENT DATA SHEETS

Revisions		
No.	Issue	Date
110822	REVIEW	
120222	REVIEW	
121222	REVIEW	
122022	REVIEW	

Project Name and Address

UNIVERSITY OF LOUISIANA AT LAFAYETTE-CLECO POWER
2008 HUTCHINSON AVE
CROWLEY, LA 70526

Drawn By: Andrea Lee, Nick Boyd	Sheet: PV-8.0
Date: 09/15/2022	
Scale: N/A	

CONFIDENTIALITY NOTICE: These plans and any documents transmitted with them may contain PRIVILEGED or CONFIDENTIAL information and may be read or used only by the intended recipient. If you are not the intended recipient, please be advised that you have received this in error and that any unauthorized review, distribution, printing, or copying of these Plans or any attached files is strictly prohibited.

EXISTING

LP–2
EXISTING OUTPUT SERVICE PANEL
480V, 3P, 4W
400A MCB

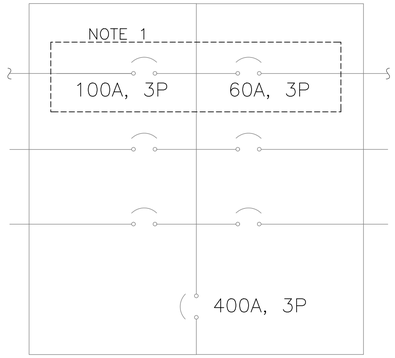

LP–2 Existing Output Service Panel Schedule												
Panel Voltage	480		Fed From	Secondary Transformer [500kVA, 3P]				Manufacturer/Model	Square D / I–Line HCN14654M			
Panel Phase/Wire	3P/4W		Panel Type	MCB				Note: Panel to be abandoned with all circuits removed.				
Amp Rating	400		Location /Mounting	Outside/Surface								
CCT No.	Load Type	OCPD	Wire	Conduit	Phase A	Phase B	Phase C	Conduit	Wire	OCPD	Load Type	CCT No.
1	ORC Generator	100	(3) #3 W/G	1'–1/4"	X			1"	(3) #6 W/G	60	Gas Generator	2
3												4
5												6

NOTES
1. CIRCUITS RELOCATED TO GP–1

PLANNED

LP–2
EXISTING OUTPUT SERVICE PANEL
480V, 3P, 4W
400A MCB

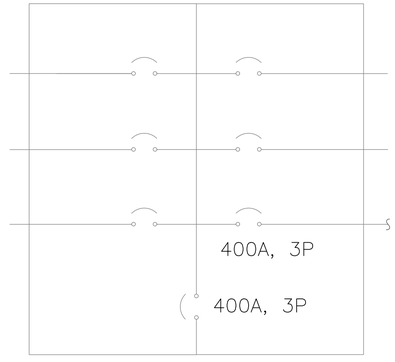

LP–2 Existing Output Service Panel Schedule												
Panel Voltage	480		Fed From	Secondary Transformer [500kVA, 3P]				Manufacturer/Model	Square D / I–Line HCN14654M			
Panel Phase/Wire	3P/4W		Panel Type	MCB				Note: Panel to be abandoned with all circuits removed.				
Amp Rating	400		Location /Mounting	Outside/Surface								
CCT No.	Load Type	OCPD	Wire	Conduit	Phase A	Phase B	Phase C	Conduit	Wire	OCPD	Load Type	CCT No.
1												2
3												4
5								3"	(8) #2 W/G	400	Secondary Service	6

PRELIMINARY – NOT FOR CONSTRUCTION

Panelboards

SOLAR ALTERNATIVES
5804 River Oaks Rd S
Elmwood, LA 70123
1–504–267–1660

General Notes

MICROGRID SYSTEM
WITH GROUND MOUNT PV

TABLE OF CONTENTS

PV–1.0 COVER PAGE
PV–1.1 GENERAL NOTES
PV–1.2 REFERENCE
PV–2.0 SITE PLAN
PV–3.0 SOLAR PLAN
PV–3.1 STRING PLAN
PV–3.2 SOLAR COMPONENTS
PV–3.3 SOLAR COMPONENTS
PV–3.4 SOLAR COMPONENTS
PV–5.0 EQUIPMENT PLAN
PV–5.1 PAD LAYOUT
PV–5.2 PAD DETAILS
PV–5.3 EQUIPMENT ROOM DETAIL
PV–5.4 EQUIPMENT ROOM ELEVATION
PV–5.5 EQUIPMENT ROOM ELEVATION
PV–5.6 EQUIPMENT ROOM ELEVATION
PV–5.7 OUTDOOR WALL ELEVATION
PV–6.0 ELECTRICAL DIAGRAM
PV–7.0 ELECTRICAL CALCULATIONS
PV–8.0 COMMUNICATIONS DIAGRAM
PV–9.0 PANELBOARDS
PV–10.0 EQUIPMENT DATA SHEETS

Revisions		
No.	Issue	Date
110822	REVIEW	
120222	REVIEW	
121222	REVIEW	
122022	REVIEW	

Project Name and Address

UNIVERSITY OF LOUISIANA AT LAFAYETTE–CLECO POWER
2008 HUTCHINSON AVE
CROWLEY, LA 70526

Drawn By: Andrea Lee, Nick Boyd
Date: 09/15/2022
Scale: N/A
Sheet: PV–9.0

CONFIDENTIALITY NOTICE: These plans and any documents transmitted with them may contain PRIVILEGED or CONFIDENTIAL information and may be read or used only by the intended recipient. If you are not the intended recipient, please be advised that you have received this in error and that any unauthorized review, distribution, printing, or copying of these Plans or any attached files is strictly prohibited.

EXISTING

LP–1
EXISTING LOAD PANEL, RELOCATED
480V, 3P, 4W 600A MCB

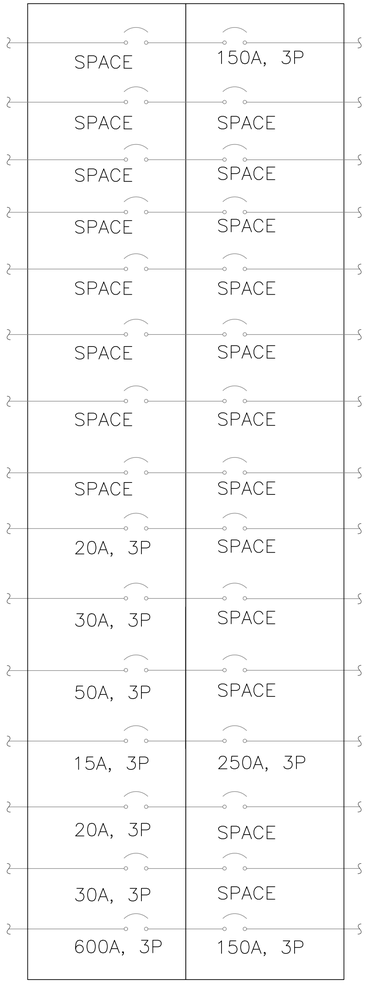

M												
Panel Voltage	480		Fed From	Secondary Transformer [500kVA, 3P]				Manufacturer/Model	Square D / I–Line HCP 11253			
Panel Phase/Wire	3P/4W		Panel Type	MCB				Note: Panel to be disconnected carefully and relocated into the building, hung on adjacent wall, and labeled "AC Load Panel"				
Amp Rating	600		Location /Mounting	Outside/Surface								
CCT No.	Load Type	OCPD	Wire	Conduit	Phase A	Phase B	Phase C	Conduit	Wire	OCPD	Load Type	CCT No.
1	Space				X			1'–1/4"	(3) #2 W/G	150	Transformer (75kVA, 120/208)	2
3	"					X					"	4
5	"						X				"	6
7	Space				X						Space	8
9	"					X					"	10
11	"						X				"	12
13	Space				X						Space	14
15	"					X					"	16
17	"						X				"	18
19	Lab AH	20	(3) #12 W/G	1/2"	X						Space	20
21	"					X					"	22
23	"						X				"	24
25	Office AH	30	(3) #10 W/G	3/4"	X						Space	26
27	"					X					"	28
29	"						X				"	30
31	Lab AH – Hood Unit	50	(3) #8 W/G	3/4"	X						Space	32
33	"					X					"	34
35	"						X				"	36
37	Compressor	15	(3) #12 W/G	1/2"	X			2'–1/4"	(4) 250 MCM W/G	250	Panel "AH"	38
39	"					X					"	40
41	"						X				"	42
43	Compressor	20	(3) #12 W/G	1/2"	X						Space	44
45	"					X					"	46
47	"						X				"	48
49	Compressor	30	(3) #10 W/G	1/2"	X						Space	50
51	"					X					"	52
53	"						X				"	54
55	Main	600	(4) #3 W/G	3/4"	X			1'–1/4"	(3) #2 W/G	150	unknown	56
57	"					X					"	58
59	"						X				"	60

PRELIMINARY – NOT FOR CONSTRUCTION

Panelboards

SOLAR ALTERNATIVES

5804 River Oaks Rd S
Elmwood, LA 70123
1–504–267–1660

General Notes

MICROGRID SYSTEM
WITH GROUND MOUNT PV

TABLE OF CONTENTS

PV–1.0 COVER PAGE
PV–1.1 GENERAL NOTES
PV–1.2 REFERENCE
PV–2.0 SITE PLAN
PV–3.0 SOLAR PLAN
PV–3.1 STRING PLAN
PV–3.2 SOLAR COMPONENTS
PV–3.3 SOLAR COMPONENTS
PV–3.4 SOLAR COMPONENTS
PV–5.0 EQUIPMENT PLAN
PV–5.1 PAD LAYOUT
PV–5.2 PAD DETAILS
PV–5.3 EQUIPMENT ROOM DETAIL
PV–5.4 EQUIPMENT ROOM ELEVATION
PV–5.5 EQUIPMENT ROOM ELEVATION
PV–5.6 EQUIPMENT ROOM ELEVATION
PV–5.7 OUTDOOR WALL ELEVATION
PV–6.0 ELECTRICAL DIAGRAM
PV–7.0 ELECTRICAL CALCULATIONS
PV–8.0 COMMUNICATIONS DIAGRAM
PV–9.0 PANELBOARDS
PV–10.0 EQUIPMENT DATA SHEETS

Revisions		
No.	Issue	Date
110822	REVIEW	
120222	REVIEW	
121222	REVIEW	
122022	REVIEW	

Project Name and Address

UNIVERSITY OF LOUISIANA AT LAFAYETTE–CLECO POWER
2008 HUTCHINSON AVE
CROWLEY, LA 70526

Drawn By: Andrea Lee, Nick Boyd
Date: 09/15/2022
Scale: N/A
Sheet: PV–9.1

CONFIDENTIALITY NOTICE: These plans and any documents transmitted with them may contain PRIVILEGED or CONFIDENTIAL information and may be read or used only by the intended recipient. If you are not the intended recipient, please be advised that you have received this in error and that any unauthorized review, distribution, printing, or copying of these Plans or any attached files is strictly prohibited.

PLANNED

LP–1
EXISTING LOAD PANEL, RELOCATED
480V, 3P, 4W 600A MCB

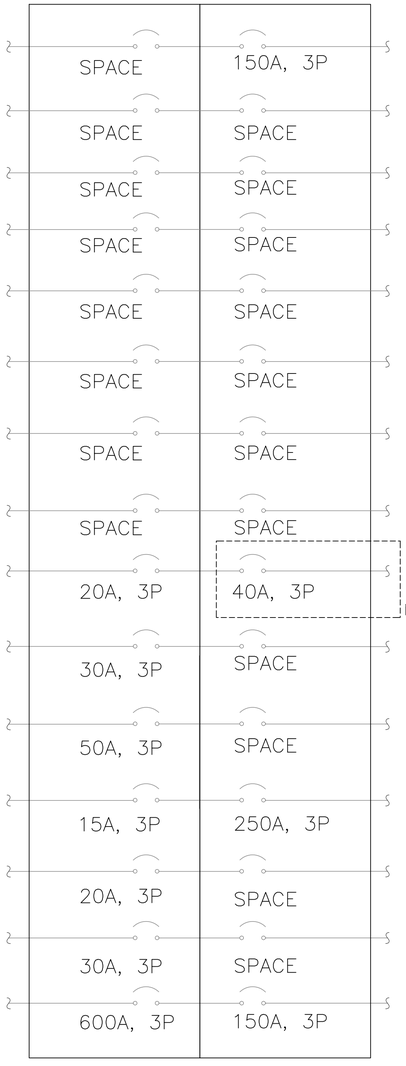

New AC Load Panel "LP–600" Schedule

Panel Voltage	480		Fed From	Secondary Transformer [500kVA, 3P]				Manufacturer/Model	Square D / I–Line HCP 11253			
Panel Phase/Wire	3P/4W		Panel Type	MCB				Note: Former "Input Service" Panel.				
Amp Rating	600		Location /Mounting	Inside/Surface								
CCT No.	Load Type	OCPD	Wire	Conduit	Phase A	Phase B	Phase C	Conduit	Wire	OCPD	Load Type	CCT No.
1	Space				X			1'–1/4"	(3) #2 W/G	150	Transformer (75kVA, 120/208)	2
3	"					X					"	4
5	"						X				"	6
7	Space				X						Space	8
9	"					X					"	10
11	"						X				"	12
13	Space				X						Space	14
15	"					X					"	16
17	"						X				"	18
19	Lab AH	20	(3) #12 W/G	1/2"	X						Space	20
21	"					X					"	22
23	"						X				"	24
25	Office AH	30	(3) #10 W/G	3/4"	X			3/4"	(4) #8 W/G	40	EV Charger	26
27	"					X					"	28
29	"						X				"	30
31	Lab AH – Hood Unit	50	(3) #8 W/G	3/4"	X						Space	32
33	"					X					"	34
35	"						X				"	36
37	Compressor	15	(3) #12 W/G	1/2"	X			2'–1/4"	(4) 250 MCM W/G	250	Panel "AH"	38
39	"					X					"	40
41	"						X				"	42
43	Compressor	20	(3) #12 W/G	1/2"	X						Space	44
45	"					X					"	46
47	"						X				"	48
49	Compressor	30	(3) #10 W/G	1/2"	X						Space	50
51	"					X					"	52
53	"						X				"	54
55	Main	600	(4) #3 W/G	3/4"	X			1'–1/4"	(3) #2 W/G	150	unknown	56
57	"					X					"	58
59	"						X				"	60

NOTES
1. CIRCUIT ADDED

PRELIMINARY – NOT FOR CONSTRUCTION

SOLAR ALTERNATIVES
5804 River Oaks Rd S
Elmwood, LA 70123
1–504–267–1660

General Notes

MICROGRID SYSTEM
WITH GROUND MOUNT PV

TABLE OF CONTENTS

PV–1.0 COVER PAGE
PV–1.1 GENERAL NOTES
PV–1.2 REFERENCE
PV–2.0 SITE PLAN
PV–3.0 SOLAR PLAN
PV–3.1 STRING PLAN
PV–3.2 SOLAR COMPONENTS
PV–3.3 SOLAR COMPONENTS
PV–3.4 SOLAR COMPONENTS
PV–5.0 EQUIPMENT PLAN
PV–5.1 PAD LAYOUT
PV–5.2 PAD DETAILS
PV–5.3 EQUIPMENT ROOM DETAIL
PV–5.4 EQUIPMENT ROOM ELEVATION
PV–5.5 EQUIPMENT ROOM ELEVATION
PV–5.6 EQUIPMENT ROOM ELEVATION
PV–5.7 OUTDOOR WALL ELEVATION
PV–6.0 ELECTRICAL DIAGRAM
PV–7.0 ELECTRICAL CALCULATIONS
PV–8.0 COMMUNICATIONS DIAGRAM
PV–9.0 PANELBOARDS
PV–10.0 EQUIPMENT DATA SHEETS

Revisions		
No.	Issue	Date
110822	REVIEW	
120222	REVIEW	
121222	REVIEW	
122022	REVIEW	

Project Name and Address

UNIVERSITY OF LOUISIANA AT LAFAYETTE–CLECO POWER
2008 HUTCHINSON AVE
CROWLEY, LA 70526

Drawn By: Andrea Lee, Nick Boyd
Date: 09/15/2022
Scale: N/A
Sheet: PV–9.2

CONFIDENTIALITY NOTICE: These plans and any documents transmitted with them may contain PRIVILEGED or CONFIDENTIAL information and may be read or used only by the intended recipient. If you are not the intended recipient, please be advised that you have received this in error and that any unauthorized review, distribution, printing, or copying of these Plans or any attached files is strictly prohibited.

PLANNED

GP–1
NEW AC GENERATION PANEL
480V, 3P, 4W
600A MCB, 800A BUS

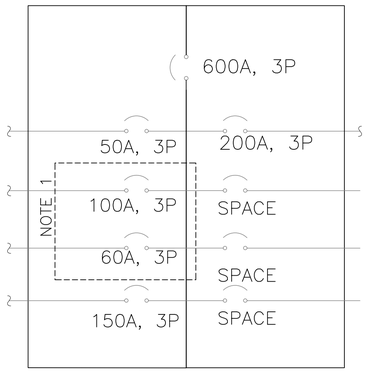

NOTES
1. CIRCUITS RELOCATED FROM LP–2

PRELIMINARY – NOT FOR CONSTRUCTION

New AC Generation Panel "GP–600" Schedule

Panel Voltage	480		Fed From	Secondary Transformer [500kVA, 3P]				Manufacturer/Model	Square D / I–Line HCN14654M			
Panel Phase/Wire	3P/4W		Panel Type	MCB				Note: 600A MCB. New loads and existing loads relocated from Panel "AH".				
Amp Rating	800		Location /Mounting	Inside/Surface								
CCT No.	Load Type	OCPD	Wire	Conduit	Phase A	Phase B	Phase C	Conduit	Wire	OCPD	Load Type	CCT No.
1	AC Test Bed	50	(4) #8 W/G	3/4"	X			2"	(3) 2/0 W/G	200	DynaPower Inverter	2
3	"					X					"	4
5	"						X				"	6
7	ORC Generator	100	(4) #2 W/G	1"	X						Space	8
9	"					X					"	10
11	"						X				"	12
13	Gas Generator	60	(4) #6 W/G	1"	X						Space	14
15	"					X					"	16
17	"						X				"	18
19	AC Load Bank	150	(4) 2/0 W/G	2"	X						Space	20
21	"										"	22
23	"										"	24

Panelboards

SOLAR ALTERNATIVES
5804 River Oaks Rd S
Elmwood, LA 70123
1–504–267–1660

General Notes

MICROGRID SYSTEM
WITH GROUND MOUNT PV

TABLE OF CONTENTS

PV–1.0 COVER PAGE
PV–1.1 GENERAL NOTES
PV–1.2 REFERENCE
PV–2.0 SITE PLAN
PV–3.0 SOLAR PLAN
PV–3.1 STRING PLAN
PV–3.2 SOLAR COMPONENTS
PV–3.3 SOLAR COMPONENTS
PV–3.4 SOLAR COMPONENTS
PV–5.0 EQUIPMENT PLAN
PV–5.1 PAD LAYOUT
PV–5.2 PAD DETAILS
PV–5.3 EQUIPMENT ROOM DETAIL
PV–5.4 EQUIPMENT ROOM ELEVATION
PV–5.5 EQUIPMENT ROOM ELEVATION
PV–5.6 EQUIPMENT ROOM ELEVATION
PV–5.7 OUTDOOR WALL ELEVATION
PV–6.0 ELECTRICAL DIAGRAM
PV–7.0 ELECTRICAL CALCULATIONS
PV–8.0 COMMUNICATIONS DIAGRAM
PV–9.0 PANELBOARDS
PV–10.0 EQUIPMENT DATA SHEETS

Revisions		
No.	Issue	Date
110822	REVIEW	
120222	REVIEW	
121222	REVIEW	
122022	REVIEW	

Project Name and Address

UNIVERSITY OF LOUISIANA AT LAFAYETTE–CLECO POWER
2008 HUTCHINSON AVE
CROWLEY, LA 70526

Drawn By: Andrea Lee, Nick Boyd
Date: 09/15/2022
Scale: N/A
Sheet: PV–9.3

CONFIDENTIALITY NOTICE: These plans and any documents transmitted with them may contain PRIVILEGED or CONFIDENTIAL information and may be read or used only by the intended recipient. If you are not the intended recipient, please be advised that you have received this in error and that any unauthorized review, distribution, printing, or copying of these Plans or any attached files is strictly prohibited.

Table 3: Series 6 Module Mechanical Specifications

DIMENSION	SPECIFICATION	MODEL TYPE	DETAILS
A	Length	FS-6XXX / FS-6XXXA	2009 mm +3/-1 mm (79.1 +0.11 / -0.04 in)
		FS-6XXX-P / FS-6XXX-P FS-6XXX-P-I / FS-6XXXA-P-I	2024 mm +3/-1 mm (79.7 +0.11/-0.04 in)
B	Width	FS-6XXX / FS-6XXXA	1232 mm ± 2 mm (48.5 ± 0.08 in)
		FS-6XXX-P / FS-6XXXA-P FS-6XXX-P-I / FS-6XXXA-P-I	1245 mm ± 2 mm (49.0 ± 0.08 in)
C	Height	FS-6XXX / FS-6XXXA FS-6XXX-P / FS-6XXXA-P	49 mm ± 1 mm (1.9 ± 0.04 in)
		FS-6XXX-P-I / FS-6XXXA-P-I	45.5 mm ± 1 mm (1.8 ± 0.04 in)
D	Junction Box Lead Wire[4]	FS-6XXX / FS-6XXXA	2.5 mm² (14 AWG) 720 mm (28.35 in) (+) & Bulkhead (-)
		FS-6XXX-P / FS-6XXX-P FS-6XXX-P-I / FS-6XXXA-P-I	2.5 mm² (14 AWG) 733 mm (28.86 in) (+) & Bulkhead (-)
Total Area		FS-6XXX / FS-6XXXA	2.47 m² (26.5 ft²)
		FS-6XXX-P / FS-6XXXA-P FS-6XXX-P-I / FS-6XXXA-P-I	2.52 m² (27.1 ft²)
Module Weight[5]		FS-6XXX / FS-6XXXA	34.5 ± 1 kg (76 ± 2.2 lbs)
		FS-6XXX-P / FS-6XXXA-P	34.9 ± 1 kg (76.9 ± 2.2 lbs)
		FS-6XXX-P-I / FS-6XXXA-P-I	34.2 ± 1 kg (75.4 ± 2.2 lbs)
Fire Performance[6]		FS-6XXX / FS-6XXXA FS-6XXX-P / FS-6XXXA-P FS-6XXX-P-I / FS-6XXXA-P-I	Type 19: Class A Spread of Flame / Class C Burning Brand

6 MECHANICAL SPECIFICATIONS

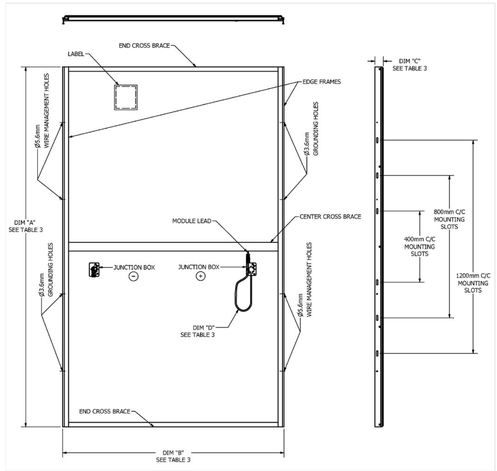

Figure 2: Series 6 Module Mechanical Drawing

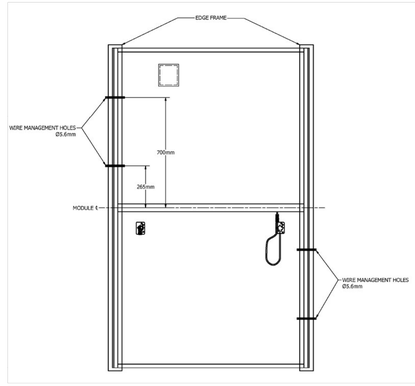

Figure 10: The above-ground DC cabling (typically a bundle of Harnesses and PV array cables) may be supported by the wire management holes located on the Series 6 Module Edge Frames.

- Holes located 265mm (10.4 in) from the center of the Edge Frame:
  - Support DC wiring bundle on Single-Torque Tube Tracker Systems
  - Support Harness end/connector (as it is being routed to the junction box)
- Holes located 700mm (27.6in) from the center of the Edge Frame:
  - Support DC wiring bundle on Two-Girder Tracker and Fixed-Tilt Systems
  - Support DC wiring bundle on Single-Torque Tube Tracker Systems with moving components that extend beyond 350mm (13.8 in) from the center of the structure.

Typically, the lead wire connection does not require wire retention or securement due to the proximity of the junction boxes on adjacent modules.

OMCO Origin™
MONOFACIAL TRACKER

Technical Specifications

Tracking technology:	Single-row, horizontal, balanced, single-axis	
Tracking range:	120°	
Modules and configurations:	Framed silicon modules - Up to 120 Series 6 modules - Up to 96 1-in-portrait	
Dimensions:	Height - Modules at 60° - 2.4 m (7.8 feet) Width - Modules horizontal - 2.0 m (6.5 feet) Length - Up to 122 m (400 feet)	
Foundations:	Driven C posts Driven I or W posts	
Structural materials:	Galvanized steel per ASTM A653	
Drive:	1 slew drive per tracker 20 drives per MW (typical)	
Motor:	1 24-volt dc brushed motor per tracker 20 motors per MW (typical)	
Control system:	1 tracker control unit mounted to each tracker with internal inclinometer DC with 30- or 60-watt module and onboard battery AC up to 264 vac input 1 network controller per 150 trackers (wireless) 1 or more meteorological stations per site 1 remote access unit per site – datalogger and modem – if needed	
Communication:	Network controller to tracker controllers: MODBUS over Zigbee wireless Network controller to SCADA: MODBUS TCP/IP over ethernet Cloud app available for remote monitoring and predictive maintenance	
Step size:	1°	
Tracking algorithm:	Based on United States Naval Observatory Solar Position Algorithm Tracking accuracy ±2°	
Backtracking:	Optional – Optimized for each tracker based on topography	
Night stow:	Yes	
Wind stow:	Yes	
Snow stow:	Yes	
Snow sensor:	Optional	
Bearings:	Self-lubricating acetal wear surfaces Adjustable in multiple dimensions to take up post misalignment Delivered fully assembled from the factory	
North-South slope:	Up to 15%	
Installation:	No welding or cutting in the field	
Compliance:	UL3703, ASCE7-10	
Warranty:	Structural Control system Drive Motor Dampers	10 years 5 years standard, 10 years optional 5 years 5 years 4 years

4550 W. Watkins St., Suite 100
Phoenix, AZ 85043
Tel: 602-352-2700 • Fax: 602-352-2701
info@omcosolar.com

OMCO SOLAR

www.omcosolar.com

© 2022 OMCO Solar
"OMCO Origin is a trademark of OMCO Solar.

OMCO Solar Quotation Package

Scope of Work

Solar Alternatives
Project Information: ULL Cleco

OMCO ORIGIN Product & Quote Specifications	
Structural Components	• Pre-galvanized drive & bearing posts • Slew drives with motors, bearing assembly, journal assembly • Torque tubes to connect module mounts, and splice connectors • Module mounts • PV Modules • Tracker control units, network control units, remote sensing units • Misc Joystick components- Kobalt 24V Charger & 24V 2.0AH Batter (to be supplied by customer) • Standard Anemometers • 1 Brushed 24 VDC motor per tracker • 4 Dampers per tracker • All necessary hardware required for assembly
Documentation & Support	• Installation manual • Full bill of materials • Marking labels - UL 969 • Stamped Issued for Construction drawings to included: *Structural Calculations* *Foundation Drawings* *Site specific array layout drawings and part drawings* • On-site support as required
Warranty	• 10 year warranty on OMCO racking components. • Warranty on motors, drives, bearing components, and control units as determined by Manufacturer
Logistics	• On site deliveries for the project will begin subject to finalized contracts • Components may ship from multiple locations • Site-specific components shipping BOM provided at time of shipment
Notes, Assumptions, Clarifications and Exclusions	• Quote assumes design loads in accordance with information provided by the customer • Qpsf ground snow load | 120 mph wind speed per ASCE7-10 • Assumes 15 ft pile embedment for quotation • Excludes costs associated with remediation of pile refusals • UL 3703 compliant (UL Certification) • Topography is assumed to conform within row design capabilities • Modules are not interchangeable; redesign may be required at additional cost • Clearing of snow and/or mud is excluded • OMCO estimated layout shown in this quote is based on site boundaries and overall project size provided by customer. Locations of other site equipment, access aisles, and setbacks require layout confirmation with customer. Final pricing may vary pending layout coordination with customer specifications. • No information has been provided that identifies the site contours or topography. Pricing assumes that the site is flat. Final quote requires a CAD file with final surfaces of the grade after any grading is completed.

OMCO SOLAR

SOLAR ALTERNATIVES
5804 River Oaks Rd S
Elmwood, LA 70123
1—504—267—1660

General Notes

MICROGRID SYSTEM
WITH GROUND MOUNT PV

TABLE OF CONTENTS

PV—1.0 COVER PAGE
PV—1.1 GENERAL NOTES
PV—1.2 REFERENCE
PV—2.0 SITE PLAN
PV—3.0 SOLAR PLAN
PV—3.1 STRING PLAN
PV—3.2 SOLAR COMPONENTS
PV—3.3 SOLAR COMPONENTS
PV—3.4 SOLAR COMPONENTS
PV—5.0 EQUIPMENT PLAN
PV—5.1 PAD LAYOUT
PV—5.2 PAD DETAILS
PV—5.3 EQUIPMENT ROOM DETAIL
PV—5.4 EQUIPMENT ROOM ELEVATION
PV—5.5 EQUIPMENT ROOM ELEVATION
PV—5.6 EQUIPMENT ROOM ELEVATION
PV—5.7 OUTDOOR WALL ELEVATION
PV—6.0 ELECTRICAL DIAGRAM
PV—7.0 ELECTRICAL CALCULATIONS
PV—8.0 COMMUNICATIONS DIAGRAM
PV—9.0 PANELBOARDS
PV—10.0 EQUIPMENT DATA SHEETS

Revisions		
No.	Issue	Date
110822	REVIEW	
120222	REVIEW	
121222	REVIEW	
122022	REVIEW	

Project Name and Address

UNIVERSITY OF LOUISIANA AT
LAFAYETTE—CLECO POWER
2008 HUTCHINSON AVE
CROWLEY, LA 70526

Drawn By Andrea Lee, Nick Boyd	Sheet PV—10.0
Date 09/15/2022	
Scale	

CONFIDENTIALITY NOTICE: These plans and any documents transmitted with them may contain PRIVILEGED or CONFIDENTIAL information and may be read or used only by the intended recipient. If you are not the intended recipient, please be advised that you have received this in error and that any unauthorized review, distribution, printing, or copying of these Plans or any attached files is strictly prohibited.

Equipment Data Sheets

chargepoint

ChargePoint Express 100 (CPE100) Charging Station

1-888-758-4389 | chargepoint.com
chargepoint
963852741

ChargePoint, Inc.
254 E. Hacienda Ave.
Campbell, CA 95008-6617 USA
US toll free: +1-877-370-3802
www.chargepoint.com

Installation Guide

Document P/N: 75-001149-01 Rev. 1

Safety and operational ratings

Enclosure Rating	Type 3R, IP 54
Safety Compliance	ETL certified, ETL certification complies with UL standards 2202, 2231-1, 2231-2
Surge Protection	6kV @ 3000A. In geographic areas subject to frequent thunderstorms, supplemental surge protection at the service panel is recommended.
EMC Compliance	FCC Part 15, Subpart B
Efficiency	>94%
Power Factor	0.93
Cooling	Forced air cooled
Operational Altitude	<1800 m (<6,000'), power derating applies at higher altitudes
Operational Temperature	-10 °C to 40 °C (14°F to 104°F) Output power derating may apply @ 30°C (86°F)
Storage Temperature	-10 °C to 40 °C (14°F to 104°F)
Operating Humidity	Up to 95% @ +50 °C (122 °F) non-condensing

Generic specifications

Dimensions (Enclosure with Mounting Bracket)	790 x 490 x 310 mm (31.1"H x 19.3"W x 12.2"D)
Shipping Dimensions	1092 x 635 x 635 mm (43"H x 25"W x 25"D)
Weight	68 kg (150 lb)
Shipping Weight	105 kg (231 lb)

Express 100 Pedestal specifications

Material	Stainless Steel
Installation Footprint (Wall Mount)	330 x 330 mm (13" x 13")
Dimensions	1422 x 584 x 508 mm5 (6.6"H x 23.9"W x 20.1"D)

NOTE: ChargePoint, Inc. reserves the right to alter product offerings and specifications at any time without notice, and is not responsible for typographical or graphical errors that may appear in this document.

Handle with care

Important: Always transport and store the CPE100 in its original packaging in a horizontal position.

Grounding instructions

The CPE100 must be connected to a grounded, metal, permanent wiring system. An equipment-grounding conductor must be run with circuit conductors and connected to an equipment-grounding terminal or lead on battery charger.

An insulated grounding conductor that is identical in size, insulation material, and thickness to the grounded and ungrounded branch-circuit supply conductors—except that it is green with or without one or more yellow stripes— is to be installed as part of the branch circuit that supplies the unit or system. This grounding conductor is to be grounded to earth at the service equipment or, when supplied by a separately derived system, at the supply transformer.

Specifications

Electrical input

Input Power	26.6kW
Input Voltage	400 - 480VAC 3 phase
Input Current	32A @ 480VAC
Input Frequency	60Hz ±5%
Required Service Panel Breaker	3-pole 40A breaker on dedicated circuit, non-GFCI type
Standard Wiring	4-wire 3 phase (L1,L2,L3,Earth)

Electrical output

Nominal Output Power	24kW (@387-460 V)
Output Voltage	300 - 460VDC
Output Current	62A max

Functional interfaces

Connector Types	CCS1 (SAE J1772 DC Combo)
Cable Length	6.1 m (20')
LCD Display	2 line LCD display
Card Reader	ISO 15693, ISO 14443, NFC

Safety and connectivity features

Vehicle Safety Communication	CCS1 -SAE J1772 over PLC
Plug-out Detection	Power terminated per JEVS G104
Power Measurement Accuracy	+/- 2% from 10% to full scale
Power Report/Store Interval	15 minutes, aligned to hour
Wide Area Network	3G GSM, 3G CDMA

Concrete pad dimensions

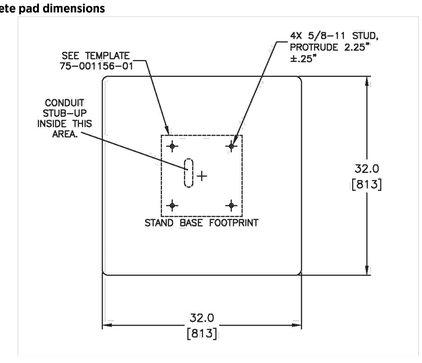

Follow these steps:

1. Trench and excavate as necessary.
2. Build a concrete form.
3. Run 1-1/4" conduit from the disconnect. Thread a nipple or short section of conduit into the coupling. This will determine the position of the plywood template and mounting bolts.
4. Add rebar as necessary. Dowel to adjacent concrete if applicable.
5. Fabricate a plywood template using template guide 75-001152-01.
   Download the guide from https://www.chargepoint.com/support-guides/
   Tolerance is +/- .05".
6. Install two nuts with one washer captured between them (as illustrated on page A-4) onto each of the four bolts. Lock them together so the washer is 1" from the bottom of the bolt.

Safety Switch General Information

Global Specifications

System Voltage	600 VAC
Switch Type	Single Throw - Heavy Duty
Poles/Blades	3-Pole
Amperage	600
Protection	Fusible with Neutral
Enclosure Type	NEMA 3R
Special Paint	ANSI-61 (Gray) Standard
Fuse Clips	H Fuse Clips
Switch Lugs	(1) 2-600 & (1) 1/0-750
Fungus Proof Treatment	None
Lock-On Provision	None
Trapped Key Interlock	None
Fuse Pullers	None
Control Pole	None
Ground Lugs	(2) 6-250
Stainless Mechanism	None
Mill Duty	None

Nameplate

Safety Switch Catalog No.

DH366NRK

The information on this document is created by Eaton Corporation. It is disclosed in confidence and it is only to be used for the purpose in which it is supplied.	PREPARED BY: KADE DESPINO	DATE: 2/23/2023	Eaton		
	APPROVED BY:	DATE:	JOB NAME: ULL CLECO Microgrid		
			DESIGNATION: GDC-1		
	VERSION: 1.0.1.3		TYPE: Safety Switch General Information	DRAWING TYPE: Customer Appr.	
NEG-ALT Number: V3DZ0213X3K2-0000	REVISION: 0	DWG SIZE: A	O.D.	ITEM	SHEET: 1 of 1

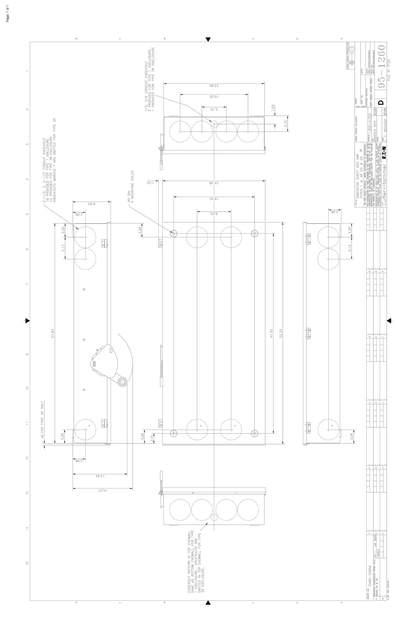

GD/NEG-Alt-Date: V3DZ0213X3K2-0000-2/23/2023	Job Name: ULL CLECO Microgrid
Item Number:	Catalog Number: DH366NRK
	Designation: GDC-1

SOLAR ALTERNATIVES
5804 River Oaks Rd S
Elmwood, LA 70123
1—504—267—1660

General Notes

MICROGRID SYSTEM
WITH GROUND MOUNT PV

TABLE OF CONTENTS

PV—1.0 COVER PAGE
PV—1.1 GENERAL NOTES
PV—1.2 REFERENCE
PV—2.0 SITE PLAN
PV—3.0 SOLAR PLAN
PV—3.1 STRING PLAN
PV—3.2 SOLAR COMPONENTS
PV—3.3 SOLAR COMPONENTS
PV—3.4 SOLAR COMPONENTS
PV—5.0 EQUIPMENT PLAN
PV—5.1 PAD LAYOUT
PV—5.2 PAD DETAILS
PV—5.3 EQUIPMENT ROOM DETAIL
PV—5.4 EQUIPMENT ROOM ELEVATION
PV—5.5 EQUIPMENT ROOM ELEVATION
PV—5.6 EQUIPMENT ROOM ELEVATION
PV—5.7 OUTDOOR WALL ELEVATION
PV—6.0 ELECTRICAL DIAGRAM
PV—7.0 ELECTRICAL CALCULATIONS
PV—8.0 COMMUNICATIONS DIAGRAM
PV—9.0 PANELBOARDS
PV—10.0 EQUIPMENT DATA SHEETS

Revisions		
No.	Issue	Date
110822	REVIEW	
120222	REVIEW	
121222	REVIEW	
122022	REVIEW	

Project Name and Address

UNIVERSITY OF LOUISIANA AT
LAFAYETTE—CLECO POWER
2008 HUTCHINSON AVE
CROWLEY, LA 70526

Drawn By: Andrea Lee, Nick Boyd	Sheet: PV—10.1
Date: 09/15/2022	
Scale:	

CONFIDENTIALITY NOTICE: These plans and any documents transmitted with them may contain PRIVILEGED and CONFIDENTIAL information. They are intended for the use of the individual or entity named above. If you are not the intended recipient, please be advised that you have received this in error and that any unauthorized review, distribution, printing, or copying of these Plans or any attached files is strictly prohibited.

Equipment Data Sheets

AVTRON POWER SOLUTIONS

4000 SERIES Data Sheet Model 4100

The Avtron Model 4100 are resistive, AC load banks designed for outdoor installation when up to 150 kW of resistive load is required.

LOAD BANK RATINGS

Standard capacity ratings of:

- 50 kW
- 75 kW
- 100 kW
- 125 kW
- 150 kW

Standard load step resolution of 5 kW.

Select from standard three phase voltage ratings of:

- 208-60Hz
- 240-60Hz
- 480-60Hz
- 240/480-60Hz
- 400-50Hz
- 600-60Hz

Single phase 240 voltage is also available.

Please consult factory for non-standard ratings.

Blower Motor Control

The blower motor is factory wired to the main load bus. If external blower connection is required, the factory installed wired must be removed. Refer to the load bank schematic for specific details.

An external 120V, 1 Phase, 60 Hz supply is required for control circuit operation.

An optional step-down transformer is available to provide the required control power. The transformer receives its power from the blower motor circuit described above.

Cooling System

Approximately 5,000 CFM cooling is provided by integral TEFC or TEAO motor which is direct coupled to the cooling fan blade.

The fan motor is fully protected with fuses, motor starter contractor, and overload relay.

Operator Controls

The standard load control for the 4100 is a manual 19" rack mount panel. Controls include: Power On/Off switch, Blower Start/Stop push buttons, Master Load On/Off switch, and Individual Load Step switches. Visual indicators include: Power On, Blower On, and Blower/Air Failure.

Other control options are available, please consult factory.

Construction

The 4100 is constructed using heavy gauge aluminized steel per ASTM A463. It is designed for continuous outdoor weatherproof operation. Forklift channels are provided in the base for lifting.

All exterior fasteners are stainless steel. The main input bus, load step relays, fuses, and blower/control relays are located in the main enclosure. The 4100 load bank is listed to UL standard 508A.

Finish

The 4100 has a high quality baked polyester powder coated finish with a film thickness of 2.8 +/- 0.4 mils per coat. The standard color is gray (ANSI 61).

Two Year Warranty Included

The equipment is covered by an industry exclusive 24-month parts and labor warranty.

Model 4100 Specifications

Resistor Elements

Avtron load banks use helically wound chromium alloy Heldyne elements. Elements are fully supported across their entire length by segmented ceramic insulators on stainless steel rods. These elements are designed to operate at approximately 1/2 of their maximum continuous wire rating.

Elements are positioned within the cooling airstream for optimal performance. Changes in resistance due to temperature are minimized by maintaining conservative watt densities.

The overall load tolerance of the 4100 load bank is -0, +5%. This ensures that advertised kW is delivered at rated voltage.

The elements are continuously rated at the specific voltage. Tests at lower voltages, with a corresponding reduction in overall rating, may be carried out.

Safety Features

A differential pressure switch is interlocked with the load application controls to prevent load from being supplied if cooling air is not present.

An overtemperature switch is provide to sense the load bank exhaust. The switch is interlocked with the load application controls to disable load from being supplied if an over-temperature condition is present.

The fan motor is protected with fuses and overloads.

Major fault protection is provided by branch circuit fuse protection. Fuse protection is provided on all load steps.

The exterior of the load bank has appropriate warning and caution statements on access panels.

Internal access is restricted by bolt on exterior panels.

The air intake on the 4100 is designed to prevent objects greater than 0.50" diameter from being ingested into the unit.

Horizontal air discharge is provided and exhaust air is directed downward away from personnel.

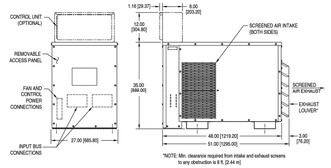

All dimensions are in inches [millimeters]. Specifications subject to change without notice.

Ambient Temperature

The 4100 load bank is designed for continuous duty cycle with no limitations. The ambient temperatures range is -20°F to 120°F (-28°C to 50°C).

Mounting

The 4100 is designed for outdoor installation on a concrete pad or structural base.

Power Terminals and Cable Entry

The power terminals are located behind a removable, bolt on access panel. The 4100 has a recommended conduit entry area underneath the power terminal assembly to facilitate load cable installation.

Optional Accessories

- Control Power Transformer
- NEMA 4 Type Control Panel Enclosure
- Automatic Load Control
- Digital Metering with Data Logging
- SIGMA 2 Digital Controls
- Remote I/O Control
- Pilot Relay Control
- PLC Control
- Arctic Rating (low temperature)

Documentation - Operating Manual

A comprehensive operator's manual is supplied electronically via a USB drive.

Sections include: Safety, Installation, Operation, Maintenance, and Trouble-shooting.

Testing and Standards

Avtron load banks comply with NEMA, NEC, and ANSI standards. Quality control system is certified to ISO9001 standards.

Weight and Dimensions

Dimensions (approx. in/mm)			Weight (approx. lb/ kg)
Length	Width	Height	
48/1219	27/685	35/889	500/227

Avtron Power Solutions
6255 Halle Drive, Cleveland, Ohio 44125, U.S.A.

www.avtronpower.com
LBsales@ascopower.com • 1-216-573-7600
©2022 Avtron Power Solutions. Publication 5517- Rev. D

DYNAPOWER
POWERING A CLEANER PLANET™

DPS-500 DC-DC Converter

Maximize PV generation and revenue with DC-coupled energy storage

FOR UTILITY-SCALE SOLAR PLUS STORAGE

This bi-directional 500kW DC-DC converter is designed to interface battery energy storage with new and existing 1000V and 1500V central inverter-based PV power plants.

The DPS-500 is ideal for utility-scale solar plus storage installations, offering advanced features including automated clipping recapture and low voltage harvesting that increase project revenues, while its DC-coupled architecture reduces installation and regulatory costs.

This DC-DC converter can operate in voltage, current, and power control modes, and is capable of on-the-fly switching between modes. Designed to be easily scaled, any combination of up to six units can be paralleled together to create building blocks of up to 3MW of storage power.

Key Technologies

- Clipping Recapture
- Low Voltage Harvesting
- Curtailment Recapture
- Energy Time Shifting
- Ramp Rate Control

System Advantages:

- Reduce installation and regulatory costs through DC-coupled architecture
- Scalable storage power up to 3MW with paralleled units

SOLAR ALTERNATIVES
5804 River Oaks Rd S
Elmwood, LA 70123
1—504—267—1660

General Notes

MICROGRID SYSTEM
WITH GROUND MOUNT PV

TABLE OF CONTENTS

PV—1.0 COVER PAGE
PV—1.1 GENERAL NOTES
PV—1.2 REFERENCE
PV—2.0 SITE PLAN
PV—3.0 SOLAR PLAN
PV—3.1 STRING PLAN
PV—3.2 SOLAR COMPONENTS
PV—3.3 SOLAR COMPONENTS
PV—3.4 SOLAR COMPONENTS
PV—5.0 EQUIPMENT PLAN
PV—5.1 PAD LAYOUT
PV—5.2 PAD DETAILS
PV—5.3 EQUIPMENT ROOM DETAIL
PV—5.4 EQUIPMENT ROOM ELEVATION
PV—5.5 EQUIPMENT ROOM ELEVATION
PV—5.6 EQUIPMENT ROOM ELEVATION
PV—5.7 OUTDOOR WALL ELEVATION
PV—6.0 ELECTRICAL DIAGRAM
PV—7.0 ELECTRICAL CALCULATIONS
PV—8.0 COMMUNICATIONS DIAGRAM
PV—9.0 PANELBOARDS
PV—10.0 EQUIPMENT DATA SHEETS

DPS-500 DC-DC Converter

TECHNICAL SPECIFICATIONS

Electrical

DC Input Voltage Range (Battery Port):	100-1500V_{DC}
DC Input Voltage Range (PV Port):	100-1500V_{DC}
Maximum Power Rating:	500kW (@1000V_{DC}) 600kW (@1200-1500V_{DC})
Maximum Current Rating:	+/-500A_{DC}
Maximum Efficiency:	99%
Average Efficiency:	98.2%
Aux/Controls Power:	Customer supplied 120V, 1-ph, 60Hz, 1kVA service Customer supplied 230V, 1-ph, 50Hz, 1kVA service

Environmental

Operating Temp:	-25 to +55°C
Cooling:	Forced Air Cooled
Enclosure:	UL 3R/IP 54
Max Elevation:	1000 Meters Full Power, 3000 Meters with Derating
Dimensions (L x W x H):	33.5" x 39.4" x 80.5"
Weight:	1300 lbs
Cable Connections:	Side or bottom entry

Certifications & Standards Compliance

UL 1741
CSA C22.2 #107.1
UL / IEC 62109-1
IEC / EN 61000-6-4
IEC / EN 61000-6-2
CISPR 11 / EN 55011
FCC Part 15 Class A
IEEE Std C37.90.2

Hardware Protections

DC Contactor and Precharge on Battery Port

Software Protections

DC Over-voltage and Under-voltage
DC Over-current
Over-temperature
Fuse monitoring

User Interface

Remote Communications:	Modbus TCP/IP
Local Indicators:	Lamps on front panel indicating operation mode & alarm/fault status

DYNAPOWER
85 Meadowland Drive, South Burlington, Vermont USA 05403
1.802.860.7200 | sales@dynapower.com

DYNAPOWER
POWERING A CLEANER PLANET™

MPS-125 Energy Storage Inverter

The world's most capable microgrid inverter

This parallelable 125kW energy storage inverter is transformer-less, air-cooled, and compact, and optimized for behind-the-meter energy storage applications.

Featuring a highly efficient three-level topology, the MPS-125 is easily integrated into customer supplied battery storage systems or can be supplied as part of Dynapower's fully-integrated MPS-i energy storage system. Multiple MPS-125 energy storage inverters can be paralleled together to scale to meet the needs of any behind-the-meter energy storage installation.

With all the functional capabilities of the grid-scale CPS inverter family, the MPS-125 supports frequency, voltage, and VAR support applications.

With our patented Dynamic Transfer™ feature, the MPS-125 inverter monitors grid stability and will automatically disconnect and transition to stand-alone mode if a grid disturbance is detected, ensuring consistent power to critical loads.

Key Technologies

- Islanded Operation (UF Mode)
- Dynamic Transfer
- Black Start
- Frequency Compensation Mode (F-Comp)
- Volt-Var Compensation Mode (E-Comp)

MPS-125 Energy Storage Inverter

TECHNICAL SPECIFICATIONS

Electrical

AC Input Voltage:	480V_{AC} 3 Phase
Grid Frequency:	60 Hz
Rated Output Apparent Power:	125kVA
Rated Output Real Power:	125kW
Rated Output Current:	150A_{RMS}
Overload AC Current:	180A_{RMS}
DC Voltage Range:	740-1500V_{DC}
Max DC Current:	171A_{DC}
Power Factor:	0 – 1.00 Leading or Lagging
Current Harmonics:	IEEE 1547 Compliant, <5% TDD
Maximum Efficiency:	98.7%
CEC Efficiency:	97%

Environmental & Mechanical

Operating Temp:	-25 to +50°C, De-rated from +45 to +50°C
Cooling:	Forced Air Cooled
Enclosure:	UL 3R/IP 54
Max Elevation:	1000 Meters Full Power Up to 3000 Meters with Derating
Dimensions (H x W x D):	36" x 28" x 15.25"
Weight:	176 lbs

Certifications & Standards Compliance

UL 1741 SA
IEEE 519
IEEE 1547
CSA 22.2 #107.1
NFPA 70

Hardware Protections

AC Breaker with Shunt Trip
AC Surge Protection
DC Disconnect
DC Input Fuses
DC Pre-charge (Optional)

Software Protections

Battery Voltage and Current Curtail Limits to protect battery
AC Current Limiting Pending
DC Over/Under Voltage, Over Current faults
AC Over/Under Voltage, Over/Under Frequency, Over Current faults
Anti-islanding Protection (Open Phase at inverter terminals)
Temperature Monitoring and protective power curtailment
Watchdog Timer to detect loss of communications

Revisions

No.	Issue	Date
110822	REVIEW	
120222	REVIEW	
121222	REVIEW	
122022	REVIEW	

Project Name and Address

UNIVERSITY OF LOUISIANA AT LAFAYETTE—CLECO POWER
2008 HUTCHINSON AVE
CROWLEY, LA 70526

Drawn By: Andrea Lee, Nick Boyd	Sheet: PV—10.2
Date: 09/15/2022	
Scale:	

CONFIDENTIALITY NOTICE: These plans and any documents transmitted with them may contain PRIVILEGED or CONFIDENTIAL information and may be read or used only by the intended recipient. If you are not the intended recipient, please be advised that you have received this in error and that any unauthorized review, distribution, printing, or copying of these Plans or any attached files is strictly prohibited.

Equipment Data Sheets

Product specifications

Eaton DCG2104FRM

Catalog Number: DCG2104FRM

Eaton heavy duty DC disconnect,200A,NEMA 3R,Painted galvanized steel,Fusible,Grounded,LC: In 300 MCM-#6 out 300 MCM-#6. SR: in 300 MCM-#6 out 300 MCM-#6. EG: in #4-#14 AWG out 1/0-#14,2,Isolated return,DC photovoltaic systems,1000 Vdc

General specifications

Product Name
Eaton heavy duty DC disconnect

Catalog Number
DCG2104FRM

UPC
786685625461

Product Length/Depth
46 in

Product Height
10.5 in

Product Width
24.12 in

Product Weight
60 lb

Warranty
Eaton Selling Policy 25-000, one (1) year from the date of installation of the Product or eighteen (18) months from the date of shipment of the Product, whichever occurs first.

Certifications
UL 98B NEC 690 per UL 1741

Product specifications

Maximum voltage
1000 Vdc

Switch type
DC photovoltaic systems
Heavy duty

Ground
Grounded

Fuse configuration
Fusible

Enclosure
NEMA 3R

Amperage Rating
200A

Enclosure material
Painted galvanized steel

Series
DC photovoltaic applications

Type
DC disconnect/grounded system

System voltage
1000 Vdc

NEMA rating
NEMA 3R

Main lug wire size
LC: In 300 kcmil-#6 out 300 kcmil-#6. SR: in 300 kcmil-#6 out 300 kcmil-#6. EG: in #4-#14 AWG out 1/0-#14

Isolation
Isolated return

Number of circuits
2

Voltage rating
1000 Vdc

Protection
Fusible

Application

Resources

Brochures
DC disconnects for grounded and ungrounded photovoltaic Installations

Catalogs
Eaton's Volume 15—Solar Inverters and Electrical Balance of System

Multimedia
Double Up on Safety

Switching Devices Flex Center

Specifications and datasheets
Eaton Specification Sheet - DCG2104FRM

Warranty guides
Selling Policy 25-000 - Distribution and Control Products and Services

Product specifications

Eaton DCG3104URM

Catalog Number: DCG3104URM

Eaton heavy duty DC disconnect,200A,NEMA 3R,Painted galvanized steel,Non-fusible,Grounded,LC: In 300 MCM-#6 out 300 MCM-#6. SR: in 300 MCM-#6 out 300 MCM-#6. EG: in #4-#14 AWG out 1/0-#14,3,Isolated return,DC photovoltaic systems,1000 Vdc

General specifications

Product Name
Eaton heavy duty DC disconnect

Catalog Number
DCG3104URM

UPC
786685625386

Product Length/Depth
35.38 in

Product Height
11.63 in

Product Width
24.26 in

Product Weight
80 lb

Warranty
Eaton Selling Policy 25-000, one (1) year from the date of installation of the Product or eighteen (18) months from the date of shipment of the Product, whichever occurs first.

Certifications
NEC 690 per UL 1741 UL 98B

Product specifications

Maximum voltage
1000 Vdc

Switch type
Heavy duty
DC photovoltaic systems

Ground
Grounded

Fuse configuration
Non-fusible

Enclosure
NEMA 3R

Amperage Rating
200A

Enclosure material
Painted galvanized steel

Series
DC photovoltaic applications

Type
DC disconnect/grounded system

System voltage
1000 Vdc

NEMA rating
NEMA 3R

Main lug wire size
LC: In 300 kcmil-#6 out 300 kcmil-#6. SR: in 300 kcmil-#6 out 300 kcmil-#6. EG: in #4-#14 AWG out 1/0-#14

Number of circuits
3

Voltage rating
1000 Vdc

Protection
Non-fusible

Application
Solar

Resources

Brochures
DC disconnects for grounded and ungrounded photovoltaic Installations

Catalogs
Eaton's Volume 15—Solar Inverters and Electrical Balance of System

Multimedia
Double Up on Safety

Switching Devices Flex Center

Specifications and datasheets
Eaton Specification Sheet - DCG3104URM

1500 VDC Solar Combiner Boxes Callouts

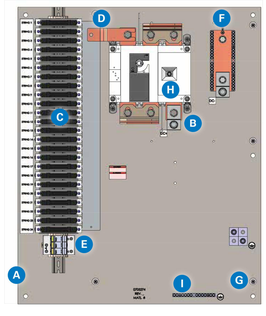

A Enclosure
Durable environmentally tested enclosures are available in NEMA 3R, 4, and 4X in a variety of materials including: fiberglass, stainless steel, NEMA 4 powder coat and painted steel (not shown).

B Positive Output Lug
Lug sizes may vary based on output requirement. Custom lugs are available upon request.

C Finger Safe Fuse Holder
Finger safe compact design simplifies installation and removal, also protects the installer from touch hazard.

D Direct Busbar
Copper bus busses input circuits into a common conductor which is tin plated for corrosion resistance. Designed for improved heat dissipation.

E Surge Protection (Optional)
Used to limit voltage in the event of electrical surge, lighting strike, etc. Wired to the combiner box common positive, negative, ground.

F Negative Assembly
Tin plated copper negative assembly busses negative inputs into a common negative output. Lug sizes may vary by combiner box output requirement. Custom lugs available upon request.

G Standoffs
Standoffs support the Lexan Shield which covers live components and protects against risk of shock.

I Grounding Bar
Grounding bar allows for termination of copper or aluminum ground inputs. Tin plated for corrosion resistance. Ground output accepts a maximum of 250 MCM output. Custom ground lugs available upon request.

H DC Disconnnect Switch
Rotary DC disconnect switch comes equipped with an external handle, which allows for lock-out tag out. The disconnect switch is intended to be used to manually make/break electrical connections and disconnect modules from downstream components. Available in 275A and 500A.

Catalog Number Matrix

Part number example
CCBF12 F15 DS275 SP 1500V
Combiner box, fiberglass NEMA 4X enclosure, 12 string, 15A fused, 275A integral disconnect switch, surge protection, 1500V rating

CCBF 12 F15 DS275 SP 1500V

Enclosure Type
CCBF = Fiberglass N4X
CCBS = Painted Steel N3R
CCBSS = Stainless Steel N4X
CCBAS = Powder Coated Steel N4

Number of Input Circuits
02 = 2 input circuits
03 = 3 input circuits
04 = 4 input circuits
05 = 5 input circuits
06 = 6 input circuits
(Offered up to 36 circuits)

Fuse Amperage*
F15 = 15A fuse
BLANK = fuses not provided by factory

Integral Disconnect Rating
DS = Disconnect switch for use with 2-36 input circuits
DS275 = 275A - Standard on combiners from 2 to 18 circuits
DS500 = 500A - Available on combiners greater than 17 circuits. Standard on combiners from 18 circuits to 36.
BLANK = No integral disconnect

Surge Protection
SP = Surge protection
30kA/1500 VDC Interrupting rating or 30kA/1000 VDC
IP20 Finger-safe construction
Small size takes up minimal space in enclosure
BLANK = No surge protection

Voltage
1500V = 1500V

Breather Vent or Drain
BV = Breather Vertical
BH = Breather Horizontal
DV = Drain Vertical
DH = Drain Horizontal
BLANK- No Vent or Drain
Orientation refers to position of the combiner, not the breather or drain

*Negative fused configurations available for positive grounded arrays. Replace F15 with NF15 in the catalog number.

Technical Information for Combiners

Solar Combiner CCB 1500V Technical Information

Standard Design:		Tech Spec					Mech Spec**				
CCB Series	Description	Voltage	Max Ambient	Max Fuse Size	Max Current for Greatest Number of Strings	Max PV Module Short Circuit Current	Input Conductors (Cu Only)		Output Conductors (Cu/Al)		NEMA Rating
		(VDC)	(°C)	(A)	(A)	(A)	Wire Gauge	Torque (in-lbs)	Wire Gauge	Torque (in-lbs)	Type
CCB_06	6 String Combiner Box (02-06 Strings)	600/1000/1500	50	15	72	9.6	#14 - #6	25	250 MCM or 350 MCM	325	4X/4/3R
CCB_12	12 String Combiner Box (07-12 Strings)	600/1000/1500	50	15	144	9.6	#14 - #6	25	250 MCM or 350 MCM	325	4X/4/3R
CCB_18	18 String Combiner Box (13-18 Strings)	600/1000/1500	50	15	216	9.6	#14 - #6	25	350 MCM	325	4X/4/3R
CCB_24	24 String Combiner Box (19-24 Strings)	600/1000/1500	50	15	288	9.6	#14 - #6	25	500 MCM	375	4X/4/3R
CCB_36	36 String Combiner Box (25-36 Strings)	600/1000/1500	50	15	433	9.6	#14 - #6	25	500 MCM	375	4X/4/3R
CCB_06 DS	6 String Combiner Box w/ Integral Disconnect Switch (02-06 Strings)	600/1000/1500	50	15	72	9.6	#14 - #6	25	250 MCM or 350 MCM	325	4X/4/3R
CCB_12 DS	12 String Combiner Box w/ Integral Disconnect Switch (07-12 Strings)	600/1000/1500	50	15	144	9.6	#14 - #6	25	250 MCM or 350 MCM	325	4X/4/3R
CCB_18 DS	18 String Combiner Box w/ Integral Disconnect Switch (13-18 Strings)	600/1000/1500	50	15	216	9.6	#14 - #6	25	350 MCM	325	4X/4/3R
CCB_24 DS	24 String Combiner Box w/ Integral Disconnect Switch (19-24 Strings)	600/1000/1500	50	15	288	9.6	#14 - #6	25	500 MCM	375	4X/4/3R
CCB_36 DS	36 String Combiner Box w/ Integral Disconnect Switch (25-36 Strings)	600/1000/1500	50	15	433	9.6	#14 - #6	25	500 MCM	375	4X/4/3R

1500V Sunnector™ Solar Whip, Jumper & Home Run Harnesses

Eaton's Crouse-Hinds Division has a long legacy of providing high reliability connectivity solutions in extremely harsh environments. Sunnector™ solar products were developed to deliver outstanding value and reliability that we are known for in the solar industry.

- Manufactured in controlled conditions utilizing high efficiency equipment, reducing job site risk and potential warranty claims
- Custom manufactured assemblies reduce costs and make solar systems easier to install by eliminating on-site crimping, cutting and testing
- Whip and jumper assemblies are available in a variety of cable options, configurations and styles
- Harness assemblies are available in customized configurations to meet specific application requirements

1500V Sunnector™ Solar Whip & Jumper Assemblies

Reduce installation time with pre-fabricated assemblies

Sunnector™ Assemblies are the preferred choice for installers and contractors looking to reduce the overall installed cost by 10% to 35%.*

Superior components means high quality performance
Specially constructed to last years in the field and reduce overall installation times. Pre-marked assemblies allow easy site layout.

Applications:
- Whips and jumpers are ideal for OEM applications, including combiner boxes, mini-inverters, modules and adapters
- Designed for exposed or concealed wet or dry locations

Features:
- Sunnector™ pre-fabricated jumpers and whips save time and money by providing various configurations that allow quick connections for a wide variety of solar applications
- Both whips and jumpers are manufactured under controlled conditions utilizing the highest quality materials. They are designed to work with rigid & flexible thin-film, monocrystalline and multicrystalline PV modules.
- All whips and jumpers are 100% continuity tested to ensure dependable service and are available in many standard lengths
- IP67 or IP68 waterproof rated dependent on connector type
- UV- and ozone-resistant
- Optional ID labeling available to communicate point-to-point connections in the field
- Rated for direct burial
- Rodent proof jacket
- Temperature range: -40°C to +90°C

Material Characteristics:
- FoHS compliant
- Cross linked polyethylene wire (XLPE or XLP)
- Flammability meets UL 94 requirements; V0 rated

Certifications and Compliances:
- MC4, H4 and UTX Connectors UL certified to UL6703 & UL1703, TUV certified, IP67 or IP68 rated
- Wire/cable UL certified to UL4703/UL854
  - #10 AWG wire – 35A current capacity†
  - #12 AWG wire – 25A current capacity†
  - #14 AWG wire – 20A current capacity†

†Recommended (not to exceed). Each system is unique and the design should consider all factors including current de-rating.
*Based on labor and material savings versus traditional wiring.

SOLAR ALTERNATIVES
5804 River Oaks Rd S
Elmwood, LA 70123
1—504—267—1660

General Notes

MICROGRID SYSTEM
WITH GROUND MOUNT PV

TABLE OF CONTENTS

PV—1.0 COVER PAGE
PV—1.1 GENERAL NOTES
PV—1.2 REFERENCE
PV—2.0 SITE PLAN
PV—3.0 SOLAR PLAN
PV—3.1 STRING PLAN
PV—3.2 SOLAR COMPONENTS
PV—3.3 SOLAR COMPONENTS
PV—3.4 SOLAR COMPONENTS
PV—5.0 EQUIPMENT PLAN
PV—5.1 PAD LAYOUT
PV—5.2 PAD DETAILS
PV—5.3 EQUIPMENT ROOM DETAIL
PV—5.4 EQUIPMENT ROOM ELEVATION
PV—5.5 EQUIPMENT ROOM ELEVATION
PV—5.6 EQUIPMENT ROOM ELEVATION
PV—5.7 OUTDOOR WALL ELEVATION
PV—6.0 ELECTRICAL DIAGRAM
PV—7.0 ELECTRICAL CALCULATIONS
PV—8.0 COMMUNICATIONS DIAGRAM
PV—9.0 PANELBOARDS
PV—10.0 EQUIPMENT DATA SHEETS

Revisions		
No.	Issue	Date
110822	REVIEW	
120222	REVIEW	
121222	REVIEW	
122022	REVIEW	

Project Name and Address

UNIVERSITY OF LOUISIANA AT LAFAYETTE—CLECO POWER
2008 HUTCHINSON AVE
CROWLEY, LA 70526

Drawn By: Andrea Lee, Nick Boyd	Sheet: PV—10.3
Date: 09/15/2022	
Scale: N/A	

CONFIDENTIALITY NOTICE: These plans and any documents transmitted with them may contain PRIVILEGED or CONFIDENTIAL information and may be read or used only by the intended recipient. If you are not the intended recipient, please be advised that you have received this in error and that any unauthorized review, distribution, printing, or copying of these Plans or any attached files is strictly prohibited.

Equipment Data Sheets

ASCO SERIES 300
Power Transfer Switches
Technical Data and Ordering Information

ascopower.com

Life Is On | Schneider Electric

ASCO SERIES 300 ORDERING INFORMATION

To order an ASCO SERIES 300 Power Transfer Switch, complete the following catalog number:

J	+ 03ATS	+ A	+ 3	+ 0600	+ N	+ GX	+ C
FRAME	**TRANSITION TYPE**	**NEUTRAL CODE**	**PHASE POLES**	**AMPERES**	**VOLTAGE CODE**	**GROUP CODE**	**ENCLOSURE**
Open Transition D = 30A - 230A Open/Delayed Transition J = 150A - 600A H = 800A - 1200A G = 1600A - 3000A	Automatic 03ATS Open Transition 3ADTS Delayed Transition Non Automatic 03NTS Open Transition 3NDTS Delayed Transition	A = Solid Neutral B = Switched Neutral	2 3	0030[1] 0070[1] 0104[1] 0150[1, 4] 0200[1, 3, 4] 0230[1, 3, 4] 0260[1, 4] 0400[1, 4] 0600[1] 0800[4] 1000[4] 1200[4, 5] 1600[4, 5] 2000[4, 5] 2600[4, 5] 3000[4, 5]	A[2] = 115 B[2] = 120 C = 208 D = 220 E = 230 F = 240 H = 380 J = 400 K = 415 L = 440 M = 460 N = 480 P = 550 Q = 575 R = 600	G0 No Optional Accessories GX Optional Accessories	0 = Open Type (zero) C = Type 1 Enclosure F = Type 3R[8,9] Enclosure G = Type 4[8] Enclosure H = Type 4X[8] Enclosure (304 Stainless Steel) L = Type 12 Enclosure M = Type 3R[8,9] Secure Double-Door Enclosure N = Type 4[8] Secure Double-Door Enclosure Q = Type 12 Secure Double-Door Enclosure R = Type 3RX[7,8,9] Secure Double-Door Enclosure (304 Stainless Steel) S = Type 3RX[7,8,9] Secure Double-Door Enclosure (316 Stainless Steel) U = Type 4X[8] Enclosure (316 Stainless Steel) V = Type 4X[8] Secure Double-Door Enclosure (316 Stainless Steel)

Notes:

1. Switch sizes 30-600 amperes supplied in non-secure enclosures as standard.
2. 115-120 volt available for 30-400 amperes only. For other voltages contact ASCO.
3. 200 and 230 amperes rated switches for use with copper cable only.
4. Switch sizes 800-3000 amperes, and 150-400 amperes 3ADTS/3NDTS provided in secure type outdoor enclosures when required.
5. Use Type 3R secure for 1200, 2000, 2600, and 3000.
6. Type 304 stainless steel is standard. Suitable for indoor or outdoor use where there may be caustic or alkali chemicals in use. To provide an improved reduction in corrosion of salt and some chemicals, optional type 316 stainless steel is recommended. This is the preferred choice for marine environments.
7. Available on switches rated 1200, 2000, 2600, and 3000 amperes.
8. When temperatures below 32°F can be experienced, special precautions should be taken, such as the inclusion of strip heaters, to prevent condensation and freezing of this condensation. This is particularly important when environmental enclosures (Type 3R, 4) are ordered for outdoor applications.
9. Type 3R enclosures are not suitable for installations subject to wind blown rain or snow. Use Type 4 enclosures where available or install supplemental shelter protection around the 3R enclosure.

SERIES 300 EXTERNAL POWER CONNECTIONS

Size UL Listed Solderless Screw-Type Terminals

SWITCH RATING (AMPERES)	RANGES OF AL-CU WIRE SIZES (UNLESS SPECIFIED COPPER ONLY)
30-230[1] ATS and NTS only	One #14 to 4/0 AWG
150[2], 260, 400	Two 1/0 AWG to 250 MCM or One #4 AWG to 600 MCM
600	Two 2/0 AWG to 600 MCM
800, 1000, 1200	Four 1/0 to 600 MCM
1600, 2000	Six 1/0 to 600 MCM
2600, 3000	Twelve 1/0 to 750 MCM

Notes:

All SERIES 300 switches are furnished with a solid neutral plate (unless switched neutral configuration is specified) and terminal lugs.
Use wire rated 75°C minimum for all power connections.

1. 200 and 230 amperes rated switches for use with copper cable only. Refer to paragraph 310.15 of the NEC for additional information.
2. 150 for DTS only.

2

SERIES 300 Transfer Switch Dimensions and Shipping Weights

UL Type 1 Enclosure*

SWITCH RATING AMPS	PHASE POLES	NEUTRAL CODE[1]	DIMENSIONS, IN. (MM)[2] WIDTH	HEIGHT	DEPTH	APPROX. SHIPPING WEIGHT LB. (KG)
30[3],70[3],104[3] 150[3], 200[3]	2	A	18 (457)	31 (787)	13 (330)	69 (32)
	2	B	18 (457)	31 (787)	13 (330)	72 (33)
	3	A	18 (457)	31 (787)	13 (330)	72 (33)
	3	B	18 (457)	31 (787)	13 (330)	75 (34)
230	2	A	18 (457)	48 (1219)	13 (330)	117 (53)
	2	B	18 (457)	48 (1219)	13 (330)	125 (57)
	3	A	18 (457)	48 (1219)	13 (330)	125 (57)
	3	B	18 (457)	48 (1219)	13 (330)	133 (61)
260, 400	2	A	24 (610)	56 (1422)	14 (356)	250 (113)
	2	B	24 (610)	56 (1422)	14 (356)	260 (118)
	3	A	24 (610)	56 (1422)	14 (356)	260 (118)
	3	B	24 (610)	56 (1422)	14 (356)	270 (123)
150, 200, 230 SERIES 3ADTS/3NTS only	2	A	24 (610)	56 (1422)	14 (356)	250 (113)
	2	B	24 (610)	56 (1422)	14 (356)	260 (118)
	3	A	24 (610)	56 (1422)	14 (356)	260 (118)
	3	B	24 (610)	56 (1422)	14 (356)	270 (123)
600	2	A	24 (610)	63 (1600)	17 (432)	300 (137)
	2	B	24 (610)	63 (1600)	17 (432)	320 (146)
	3	A	24 (610)	63 (1600)	17 (432)	320 (146)
	3	B	24 (610)	63 (1600)	17 (432)	320 (151)
800, 1000	2	A	34 (864)	72 (1829)	20 (508)	431 (196)
	2	B	34 (864)	72 (1829)	20 (508)	460 (209)
	3	A	34 (864)	72 (1829)	20 (508)	460 (209)
	3	B	34 (864)	72 (1829)	20 (508)	489 (222)
1200	2	A	38 (965)	87 (2210)	23 (584)	581 (264)
	2	B	38 (965)	87 (2210)	23 (584)	611 (277)
	3	A	38 (965)	87 (2210)	23 (584)	611 (277)
	3	B	38 (965)	87 (2210)	23 (584)	639 (290)
1600, 2000	3	A	38 (965)	87 (2210)	23 (584)	1160 (525)
	3	B	38 (965)	87 (2210)	23 (584)	1160 (525)
2600, 3000[4]	3	A	38 (965)	91 (2311)	72 (1829)	1430 (649)
	3	B	38 (965)	91 (2311)	72 (1829)	1495 (679)

Notes:

1. Neutral Codes: 0=None, A=Solid, B=Switched
2. Dimensional data is approximate and subject to change. Certified dimensions available upon request.
3. Dimensions for 30-200 ampere models when furnished with accessory 135L power meter are 18"W x 41"H x 13"D.
4. Enclosures for 2600, 3000 amperes are free-standing with removable top, sides and back.

* Unit is designed for top cable entry of emergency and load, and bottom entry of normal.
A cable pull box is also available for all top or bottom cable access when required (optional accessory kit #K609027).
Not required for type 3R, 4X, and 12 enclosures where available.

3

AF40 ... AF96 3-pole contactors

18.5 to 45 kW
AC / DC operated

AF40-30-00

AF80-30-00

AF40 ... AF96 contactors are mainly used for controlling 3-phase motors and power circuits up to 1000 V AC and 220 V DC. These contactors are of the block type design with 3 main poles.

- control circuit: AC or DC operated with electronic coil interface accepting a wide control voltage range (e.g. 100...250 V AC and DC), only 4 control voltage ranges covering 24...500 V 50/60 Hz and 20...500 V DC
  - can manage large control voltage variations
  - reduced panel energy consumption
  - very distinct closing and opening
  - can withstand short voltage dips and voltage sags (SEMI F47-0706 conditions of use on request).
- built-in surge suppression
- add-on auxiliary contact blocks for front or side mounting and a wide range of accessories.

IEC Rated operational power 400 V AC-3 kW	IEC current θ ≤ 40 °C AC-1 A	UL / CSA 3-phase motor rating 480 V hp	UL / CSA General use rating 600 V AC A	Rated control circuit voltage Uc min. ... Uc max. V 50/60 Hz	V DC	Auxiliary contacts fitted	Type (1)	Order code	Weight Pkg (1 pce) kg
18.5	70	30	60	24...60	20...60 (1)	0 0	AF40-30-00-11	1SBL347001R1100	0.970
				48...130	48...130	0 0	AF40-30-00-12	1SBL347001R1200	0.970
				100...250	100...250	0 0	AF40-30-00-13	1SBL347001R1300	0.950
				250...500	250...500	0 0	AF40-30-00-14	1SBL347001R1400	0.950
22	100	40	80	24...60	20...60 (1)	0 0	AF52-30-00-11	1SBL367001R1100	0.970
				48...130	48...130	0 0	AF52-30-00-12	1SBL367001R1200	0.970
				100...250	100...250	0 0	AF52-30-00-13	1SBL367001R1300	0.950
				250...500	250...500	0 0	AF52-30-00-14	1SBL367001R1400	0.950
30	105	50	90	24...60	20...60 (1)	0 0	AF65-30-00-11	1SBL387001R1100	0.970
				48...130	48...130	0 0	AF65-30-00-12	1SBL387001R1200	0.970
				100...250	100...250	0 0	AF65-30-00-13	1SBL387001R1300	0.950
				250...500	250...500	0 0	AF65-30-00-14	1SBL387001R1400	0.950
37	125	60	105	24...60	20...60 (1)	0 0	AF80-30-00-11	1SBL397001R1100	1.220
				48...130	48...130	0 0	AF80-30-00-12	1SBL397001R1200	1.220
				100...250	100...250	0 0	AF80-30-00-13	1SBL397001R1300	1.170
				250...500	250...500	0 0	AF80-30-00-14	1SBL397001R1400	1.170
45/55	130	60/75	115	24...60	20...60 (1)	0 0	AF96-30-00-11	1SBL407001R1100	1.220
				48...130	48...130	0 0	AF96-30-00-12	1SBL407001R1200	1.220
				100...250	100...250	0 0	AF96-30-00-13	1SBL407001R1300	1.170
				250...500	250...500	0 0	AF96-30-00-14	1SBL407001R1400	1.170

(1) For control by PLC-output, use RA4 interface relay.

AF40, AF52, AF65

AF80, AF96

AF09 ... AF96 3-pole contactors

Contactors and main accessories

Main accessory fitting details - for ordering details, technical data and other accessories: see section accessories
Many configurations of accessories are possible depending on whether these are front-mounted or side-mounted.

Contactor types	Main poles	Built-in auxiliary contacts	Front-mounted accessories Auxiliary contact blocks 1-pole CA4	2-pole CAT4-11	4-pole CA4	Electronic timer TEF4	Mechanical latching unit WA4 (2)	Electrical and mechanical interlock set (between 2 contactors) VEM4	Side-mounted accessories Auxiliary contact blocks 2-pole CAL4-11 Left side	Right side
AF09(Z) ... AF38(Z) (1)										
AF09 ... AF16	3 0	0 1	4 max.	or 1	or 1	or 1	or 1	–	+ 1	–
AF09 ... AF16	3 0	1 0	2 max.	or 1	–	or 1	or 1	–	+ 1	+ 1
AF26 ... AF38	3 0	0 0	3 max.	–	–	–	–	+ 1 (3)	+ 1	or 1
AF09Z ... AF38Z 24 V DC designed for PLC - coil 30 (1)										
AF09Z ... AF16Z	3 0	0 1	4 max.	–	or 1	or 1	–	– (3)	or 1	+ 1
AF09Z ... AF16Z	3 0	1 0	2 max.	–	–	or 1	–	– (3)	+ 1	or 1
AF26Z ... AF38Z	3 0	0 0	–	–	–	1	–	–	+ 1	+ 1
AF40 ... AF96										
AF40 ... AF65	3 0	0 0	4 max.	or 1	or 1	or 1	or 1	–	+ 1	+ 1
AF80, AF96	3 0	0 0	4 max.	–	or 1	or 1	or 1	–	+ 1	+ 1

(1) Including add-on and built-in contacts : 4 N.C. auxiliary contacts max on positions 1, 2, 3, 4 and 3 N.C. auxiliary contacts max. on positions 1 ±30°, 5.
(2) Use WA4 for AF09 ... AF65 and WA4-96 for AF80, AF96.
Accept 1-pole CA4 auxiliary contacts (1 block on each side of the mechanical latch) in respect to the total number of built-in or additional N.C. auxiliary contacts.
For WA4 accessory use with contactor coil 30, please consult your ABB local sales organization.
(3) VEM4 not suitable for AF..Z contactors with DC control voltages 12...20 V DC (coil 20) and 24 V DC (coil 30). Use VM4 side-mounted mechanical interlock unit.

Overload relays fitting details (4)

Contactor types	Thermal overload relays	Electronic overload relays
AF09 ... AF38	TF42 (0.10...38 A)	EF19 (0.10...19 A)
AF26 ... AF38	TF42 (0.10...38 A)	EF45 (9...45 A)
AF40 ... AF65	TF65 (22...67 A)	EF65 (20...70 A)
AF80, AF96	TF96 (40...96 A)	EF96 (36...100 A)

The addition of an overload relay on the contactor does not prevent fitting of many other accessories as shown above.

AF400 ... AF750 3-pole contactors

200 to 400 kW
AC / DC operated with 1 N.O. + 1 N.C. auxiliary contacts

AF460-30-11

AF750-30-11

AF400 ... AF750 contactors are mainly used for controlling 3-phase motors and power circuits up to 1000 V AC or 600 V DC (2). These contactors are of the block type design with 3 main poles.

- control circuit: AC or DC operated with electronic coil interface accepting a wide control voltage range (e.g. 100...250 V AC and DC), only 4 coils to cover control voltages between 48...500 V 50/60 Hz and 24...500 V DC
  - can manage large control voltage variations
  - reduced panel energy consumption
  - very distinct closing and opening
  - can withstand short voltage dips and voltages sags (SEMI F47 conditions of use on request).
- built-in surge suppression
- add-on auxiliary contact blocks for side mounting and a wide range of accessories.

IEC Rated operational power 400 V AC-3 kW	IEC current θ ≤ 40 °C 690 V AC-1 A	UL/CSA 3-phase motor rating 480 V hp	UL/CSA General use rating 600 V AC A	Rated control circuit voltage Uc min. ... Uc max. V 50/60 Hz	V DC	Auxiliary contacts fitted	Type	Order code	Weight Pkg (1 pce) kg
200	600	350	550	-	24...60	1 1	AF400-30-11	1SFL577001R6811 (1)	12.000
				48...130	48...130	1 1	AF400-30-11	1SFL577001R6911	12.000
				100...250	100...250	1 1	AF400-30-11	1SFL577001R7011	12.000
				250...500	250...500	1 1	AF400-30-11	1SFL577001R7111	12.000
250	700	400	650	-	24...60	1 1	AF460-30-11	1SFL597001R6811 (1)	12.000
				48...130	48...130	1 1	AF460-30-11	1SFL597001R6911	12.000
				100...250	100...250	1 1	AF460-30-11	1SFL597001R7011	12.000
				250...500	250...500	1 1	AF460-30-11	1SFL597001R7111	12.000
315	800	500	750	-	24...60	1 1	AF580-30-11	1SFL617001R6811 (1)	15.000
				48...130	48...130	1 1	AF580-30-11	1SFL617001R6911	15.000
				100...250	100...250	1 1	AF580-30-11	1SFL617001R7011	15.000
				250...500	250...500	1 1	AF580-30-11	1SFL617001R7111	15.000
400	1050	600	900	-	24...60	1 1	AF750-30-11	1SFL637001R6811 (1)	15.000
				48...130	48...130	1 1	AF750-30-11	1SFL637001R6911	15.000
				100...250	100...250	1 1	AF750-30-11	1SFL637001R7011	15.000
				250...500	250...500	1 1	AF750-30-11	1SFL637001R7111	15.000

(1) The connection polarities indicated close to the coil terminals must be respected: A1 for the positive pole and A2 for the negative pole.
(2) Up to 850 V DC for AF580, AF750.

AF400 ... AF750 are equipped with low voltage inputs for control, for example by a PLC.

Control inputs

AF400, AF460

AF580, AF750

AF400 ... AF2850 3-pole contactors with 1 N.O. + 1 N.C. auxiliary contacts

Contactors and main accessories

Main accessories (other accessories available)

Main accessory fitting details - for ordering details, technical data and other accessories: see section accessories

Contactor types	Main poles	Available auxiliary contacts	Side-mounted accessories Auxiliary contact blocks CAL18-11	CAL18-11B (3)	Mechanical interlock units (between two contactors)
Contactors + auxiliary contact blocks					
AF400 ... AF2850	3 0	1 1	1 x CAL18-11	+ 2 x CAL18-11B	–
Contactors with mechanical interlocking + auxiliary contact blocks					
AF400 ... AF2850	3 0	1 1	2 x CAL18-11 (1)	+ 4 x CAL18-11B (1)	+ VM...H (2)

(1) Total number of auxiliary contact blocks for the two contactors. (2) Interlock type, according to the contactor ratings (see "Accessories").
(3) The CEL18-... auxiliary contact blocks can replace the CAL18-11 and CAL18-11B. Though, no auxiliary contact block can be mounted outside the CEL18-...

Overload relays fitting details

Contactor types	Thermal overload relays	Electronic overload relays
AF400, AF460	–	EF460 (150...500 A) (1)
AF580, AF750	–	EF750 (250...800 A) (1)
AF1350, AF1650	–	EF1250DU (375...1250 A) (1)

The addition of a thermal or electronic overload relay on the contactor does not prevent fitting of many other accessories as shown in "Main accessory fitting details" table.
(1) Mounting kit required (see "Motor protection").

Equipment Data Sheets

5804 River Oaks Rd S
Elmwood, LA 70123
1-504-267-1660

General Notes

MICROGRID SYSTEM
WITH GROUND MOUNT PV

TABLE OF CONTENTS

PV-1.0 COVER PAGE
PV-1.1 GENERAL NOTES
PV-1.2 REFERENCE
PV-2.0 SITE PLAN
PV-3.0 SOLAR PLAN
PV-3.1 STRING PLAN
PV-3.2 SOLAR COMPONENTS
PV-3.3 SOLAR COMPONENTS
PV-3.4 SOLAR COMPONENTS
PV-5.0 EQUIPMENT PLAN
PV-5.1 PAD LAYOUT
PV-5.2 PAD DETAILS
PV-5.3 EQUIPMENT ROOM DETAIL
PV-5.4 EQUIPMENT ROOM ELEVATION
PV-5.5 EQUIPMENT ROOM ELEVATION
PV-5.6 EQUIPMENT ROOM ELEVATION
PV-5.7 OUTDOOR WALL ELEVATION
PV-6.0 ELECTRICAL DIAGRAM
PV-7.0 ELECTRICAL CALCULATIONS
PV-8.0 COMMUNICATIONS DIAGRAM
PV-9.0 PANELBOARDS
PV-10.0 EQUIPMENT DATA SHEETS

Revisions		
No.	Issue	Date
110822	REVIEW	
120222	REVIEW	
121222	REVIEW	
122022	REVIEW	

Project Name and Address

UNIVERSITY OF LOUISIANA AT LAFAYETTE-CLECO POWER
2008 HUTCHINSON AVE
CROWLEY, LA 70526

Drawn By: Andrea Lee, Nick Boyd
Date: 09/15/2022
Scale: N/A
Sheet: PV-10.4

CONFIDENTIALITY NOTICE: These plans and any documents transmitted with them may contain PRIVILEGED or CONFIDENTIAL information and may be read or used only by the intended recipient. If you are not the intended recipient, please be advised that you have received this in error and that any unauthorized review, distribution, printing, or copying of these Plans or any attached files is strictly prohibited.

Blue Ion LX
Grid Optional™ Energy Solution

Energy from renewables like solar is variable, leaving people still tethered to the utility grid with limited options to disconnect. Blue Planet Energy tames energy to make clean power work on demand and brings new options to leave the grid behind. Our Blue Ion LX is a premium Grid Optional™ energy solution that integrates the energy storage, system intelligence and site controls needed to be grid-free. Blue Ion LX is flexible and can also work in conjunction with the grid or generators in order to optimize using them, providing you the widest range of energy options. Built in the USA, the Blue Ion LX is ruggedized for use cases where energy is absolutely critical *(emergency services/healthcare)* or *prohibitively high-cost (business continuity/utility rate structures).*

- Grid Optional™ Functions with or without the Utility Grid
- Fully Scalable and Expandable
- Operating Temperature Range: -4°F to 113°F (-20°C to 45°C)
- 100% Usable Capacity
- 21 Year Life Expectancy

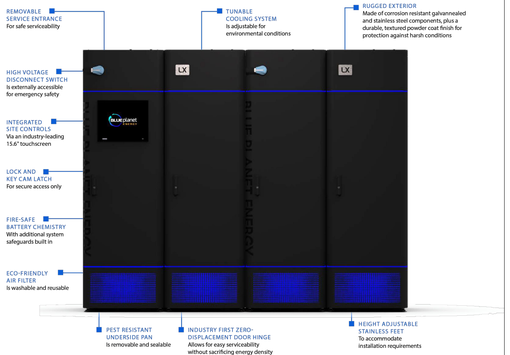

blueplanetenergy.com | sales@blueplanetenergy.com

Model Number

Blue Ion LX | Grid Optional™ Energy Solution

System Technical Specifications

MIN SYSTEM SIZE	125kWh/128kWh
EXPANDABLE	32kWh increments
DIMENSIONS PER 32kWh ENCLOSURE (H x W x D)	76 in x 24 in x 32 in (193.04 cm x 60.96 cm x 81.28 cm)
DIMENSIONS TOTAL (128kWh SYSTEM, H x W x D)	76 in x 96 in x 32 in (193.04 cm x 243.84 cm x 81.28 cm)
MOUNTING	Adjustable Feet, Floor Mount
ALTITUDE LIMITATIONS	14,404 ft (5,000 m) at Full Power

Battery Specifications

STORAGE TEMPERATURE RANGE	-4°F to 113°F (-20°C to 45°C)
DISCHARGE TEMPERATURE RANGE	-4°F to 122°F (-20°C to 50°C)
CHARGE TEMPERATURE RANGE	32°F to 113°F (0°C to 45°C)
OPERATING AMBIENT HUMIDITY	10% RH to 90% RH
ENCLOSURE TYPE	Indoor (NEMA 1)
PERFORMANCE WARRANTY	15 Years or 8,000 Cycles to 70%* Remaining Capacity (100% DoD)
COOLING NOISE dB	65dB
C-RATE	1C*
CHEMISTRY	Lithium Ferrous Phosphate (LiFePO4)
WEIGHT	1,300 lb (590 kg) for 128kWh increment

* Refer to warranty documentation

Controller Specifications

DATA ACCESS	Cloud, Local Area Network and/or Screen on LX

Compliance Information

CERTIFIED TO	UL 9540, UL 9540A, UL 1642, UL 1741, UL 1973, UN 38.3, UL 1741 SA, IEEE 1547, Rule 21, HECO Listed
EMISSIONS	FCC Part 15 Class B, ICES-003 Class B
VENTILATION	As required by your local AHJ
FIRE SUPPRESSION	NFPA 13D or NFPA 13R *As applicable to your building*

Applications

OFF-GRID	Generation source agnostic, generator interface, load control, islanding capable, resiliency
GRID INTERCONNECTED	Microgrid with full grid interactivity and full off-grid capability, zero export, self consumption, tariff optimization, demand management, load shifting

All dimensions = inch (mm)

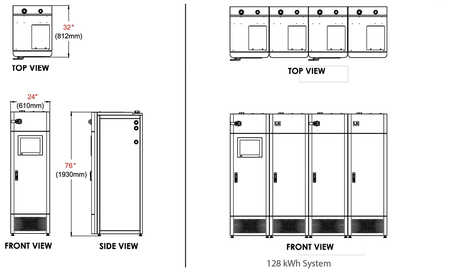

1.1-081622

Blue Planet Energy
55 Merchant St., 17th Floor
Honolulu, HI 96813

1.866.957.2246
sales@blueplanetenergy.com
blueplanetenergy.com

© 2022 Blue Planet Energy. All rights reserved. Other parties' marks are the property of their respective owners.

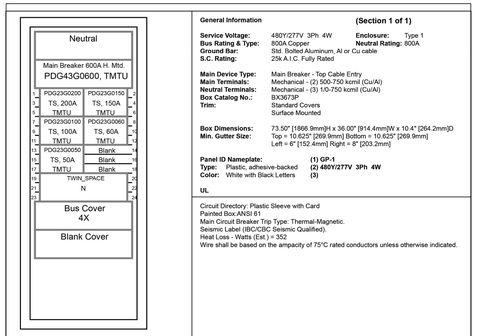

General Information **(Section 1 of 1)**

Service Voltage: 480Y/277V 3Ph 4W
Bus Rating & Type: 800A Copper
Ground Bar: 5bt. Bolted Aluminum, Al or Cu cable
S.C. Rating: 25k A.I.C. Fully Rated

Enclosure: Type 1
Neutral Rating: 800A

Main Device Type: Main Breaker - Top Cable Entry
Main Terminals: Mechanical - (2) 500-750 kcmil (Cu/Al)
Neutral Terminals: Mechanical - (3) 1/0-750 kcmil (Cu/Al)
Box Catalog No.: BX3673P
Trim: Standard Covers
Surface Mounted

Box Dimensions: 73.50" [1866.9mm]H x 36.00" [914.4mm]W x 10.4" [264.2mm]D
Min. Gutter Size: Top = 10.625" [269.9mm] Bottom = 10.625" [269.9mm]
Left = 8" [152.4mm] Right = 8" [203.2mm]

Panel ID Nameplate: **(1) GP-1**
Type: Plastic, adhesive-backed **(2) 480Y/277V 3Ph 4W**
Color: White with Black Letters **(3)**

UL

Circuit Directory: Plastic Sleeve with Card
Painted Box:ANSI 61
Main Circuit Breaker Trip Type: Thermal-Magnetic.
Seismic Label (IBC/CBC Seismic Qualified).
Heat Loss - Watts (Est.) = 352
Wire shall be based on the ampacity of 75°C rated conductors unless otherwise indicated.

Device Modifications:

Ref #	Description

Notes:

Branch Devices

Qty	Poles	Trip	Frame	Amps	kAIC
1	3	200	Frame 2	225	25
1	3	150	Frame 2	225	25
1	3	100	Frame 2	100	25
1	3	60	Frame 2	100	25
1	3	50	Frame 2	100	25
1	3		TWIN_SPACE		

Main Devices

Qty	Poles	Trip	Frame	Amps	kAIC
1	3	600	Frame 4	800	25

The information on this document is created by Eaton Corporation. It is disclosed in confidence and it is only to be used for the purpose in which it is supplied.

PREPARED BY: LACEY FERRARO	DATE: 2/23/2023	Eaton	
APPROVED BY:	DATE:	JOB NAME: ULL CLECO Microgrid	
		DESIGNATION: GP-1	
VERSION: 1.0.0.57		TYPE: PRL4X	DRAWING TYPE: Customer Approval
NEG-ALT Number: V3DZ0213X3K2-0000	REVISION: 0	DWG SIZE: A	G.O.	ITEM	SHEET: 1 of 2

Pow-R-Line4X Device Specifications

Ckt #s	Nameplate	Device	Trip	Terminal	Modifications
Main		PDG43G0600	600	(2) 500-750 kcmil (Cu/Al)	
1,3,5		PDG23G0200	200	(1) #4-4/0 (Cu/Al)	
2,4,6		PDG23G0150	150	(1) #4-4/0 (Cu/Al)	
7,9,11		PDG23G0100	100	(1) #14-1/0 (Cu/Al)	
8,10,12		PDG23G0060	60	(1) #14-1/0 (Cu/Al)	
13,15,17		PDG23G0050	50	(1) #14-1/0 (Cu/Al)	
19,20,21 22,23,24		TWIN_SPACE	50	None Available	

The information on this document is created by Eaton Corporation. It is disclosed in confidence and it is only to be used for the purpose in which it is supplied.

PREPARED BY: LACEY FERRARO	DATE: 2/23/2023	Eaton	
APPROVED BY:	DATE:	JOB NAME: ULL CLECO Microgrid	
		DESIGNATION: GP-1	
VERSION: 1.0.0.57		TYPE: PRL4X	DRAWING TYPE: Customer Approval
NEG-ALT Number: V3DZ0213X3K2-0000	REVISION: 0	DWG SIZE: A	G.O.	ITEM	SHEET: 2 of 2

Dry-Type Transformers General Information

- ☐ Standard Transformer Catalog Number: V48M47T2216
- ☐ Transformer Type: General Purpose Vented
- ☐ Phase: 3
- ☐ kVA: 225
- ☐ Primary Volts: 480
- ☐ Secondary Volts: 480Y/277
- ☐ Temperature Rise: 150C with 220C Insulation System
- ☐ Winding Material: Aluminum
- ☐ Enclosure Type: NEMA 2 (for N3R, select Weather Shield in Mods tab)
- ☐ Frequency (Hz): 60
- ☐ Frame: 944
- ☐ Wiring Diagram: 280B
- ☐ Weight (lbs): 1912
- ☐ Impedance (%): 5.34
- ☐ UL Listed: Y
- ☐ X/R: 3.68

Standard Values

- ☐ K-Factor: 1
- ☐ TAPS: 2@+2.5%, 4@-2.5%
- ☐ Sound Reduction (dB): 0
- ☐ NEMA ST20 Sound Level (dB): 55
- ☐ DOE 10 CFR Part 431 (2016) Efficient: Y
- ☐ Infrared Viewing Window: None

Field-Installed Accessories Included

- ☐ Lug Kit: LKS3 (1PH 100-167KVA or 3PH 150-300K)
- ☐ Weather Shield: WS61

The information on this document is created by Eaton. It is disclosed in confidence and it is only to be used for the purpose in which it is supplied.

PREPARED BY: LACEY FERRARO	DATE: 2/23/2023	Eaton	
APPROVED BY:	DATE:	JOB NAME: ULL CLECO Microgrid	
		DESIGNATION: 225KVA	
VERSION: 1.0.0.4		TYPE: Dry-Type Transformer	DRAWING TYPE: Customer Appr.
NEG-ALT Number: V3DZ0213X3K2-0000	REVISION: 0	DWG SIZE: A	G.O.	ITEM	SHEET: 1 of 1

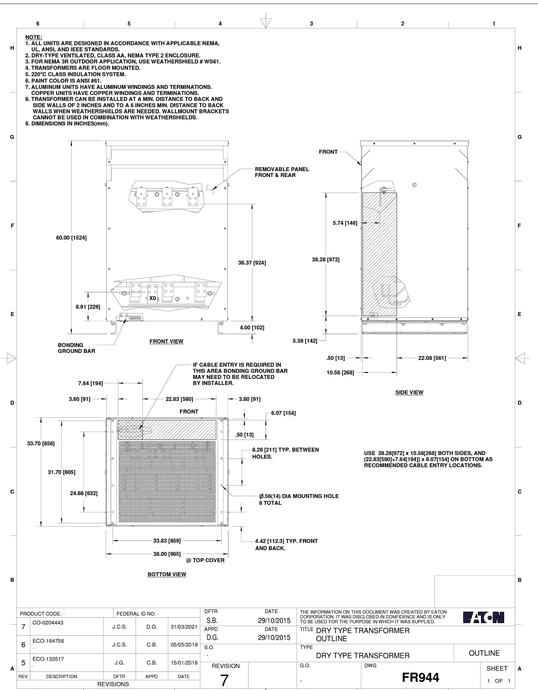

PRODUCT CODE:		FEDERAL ID NO.			DFTR: S.B.	DATE: 29/10/2015	THE INFORMATION ON THIS DOCUMENT WAS CREATED BY EATON CORPORATION. IT WAS DISCLOSED IN CONFIDENCE AND IS ONLY TO BE USED FOR THE PURPOSE IN WHICH IT WAS SUPPLIED.
7	CO-0204443	J.C.S.	D.G.	31/03/2021	APPD: D.G.	DATE: 29/10/2015	TITLE: DRY TYPE TRANSFORMER OUTLINE
6	ECO-164756	J.C.S.	C.B.	05/05/2019	S.O.		TYPE: DRY TYPE TRANSFORMER OUTLINE
5	ECO-135517	J.G.	C.B.	15/01/2018	REVISION: 7	G.O. -	DWG: FR944 SHEET: 1 OF 1
REV	DESCRIPTION	DFTR	APPD	DATE	REVISIONS		

GO/NEG-Alt-Date: V3DZ0213X3K2-0000-2/23/2023
Job Name: ULL CLECO Microgrid
Item Number: **Catalog Number:** V48M47T2216
Designation: 225KVA

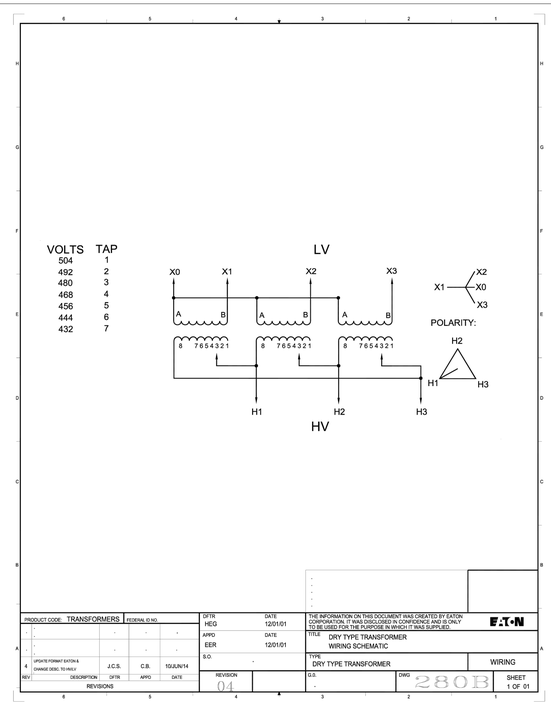

PRODUCT CODE: TRANSFORMERS		FEDERAL ID NO.			DFTR: HEG	DATE: 12/01/01	THE INFORMATION ON THIS DOCUMENT WAS CREATED BY EATON CORPORATION. IT WAS DISCLOSED IN CONFIDENCE AND IS ONLY TO BE USED FOR THE PURPOSE IN WHICH IT WAS SUPPLIED.
					APPD: EER	DATE: 12/01/01	TITLE: DRY TYPE TRANSFORMER WIRING SCHEMATIC
					S.O. -		TYPE: DRY TYPE TRANSFORMER WIRING
4	UPDATE FORMAT EATON & CHANGE DESC. TO HOLU	J.C.S.	C.B.	10JUN/14	REVISION: 01	G.O. -	DWG: 2803 SHEET: 1 OF 01
REV	DESCRIPTION	DFTR	APPD	DATE	REVISIONS		

GO/NEG-Alt-Date: V3DZ0213X3K2-0000-2/23/2023
Job Name: ULL CLECO Microgrid
Item Number: **Catalog Number:** V48M47T2216
Designation: 225KVA

Equipment Data Sheets

SOLAR ALTERNATIVES

5804 River Oaks Rd S
Elmwood, LA 70123
1-504-267-1660

General Notes

MICROGRID SYSTEM
WITH GROUND MOUNT PV

TABLE OF CONTENTS

PV-1.0 COVER PAGE
PV-1.1 GENERAL NOTES
PV-1.2 REFERENCE
PV-2.0 SITE PLAN
PV-3.0 SOLAR PLAN
PV-3.1 STRING PLAN
PV-3.2 SOLAR COMPONENTS
PV-3.3 SOLAR COMPONENTS
PV-3.4 SOLAR COMPONENTS
PV-5.0 EQUIPMENT PLAN
PV-5.1 PAD LAYOUT
PV-5.2 PAD DETAILS
PV-5.3 EQUIPMENT ROOM DETAIL
PV-5.4 EQUIPMENT ROOM ELEVATION
PV-5.5 EQUIPMENT ROOM ELEVATION
PV-5.6 EQUIPMENT ROOM ELEVATION
PV-5.7 OUTDOOR WALL ELEVATION
PV-6.0 ELECTRICAL DIAGRAM
PV-7.0 ELECTRICAL CALCULATIONS
PV-8.0 COMMUNICATIONS DIAGRAM
PV-9.0 PANELBOARDS
PV-10.0 EQUIPMENT DATA SHEETS

Revisions		
No.	Issue	Date
110822	REVIEW	
120222	REVIEW	
121222	REVIEW	
122022	REVIEW	

Project Name and Address

UNIVERSITY OF LOUISIANA AT LAFAYETTE-CLECO POWER
2008 HUTCHINSON AVE
CROWLEY, LA 70526

Drawn By: Andrea Lee, Nick Boyd
Date: 09/15/2022
Scale: N/A
Sheet: PV-10.5

CONFIDENTIALITY NOTICE: These plans and any documents transmitted with them may contain PRIVILEGED or CONFIDENTIAL information and may be read or used only by the intended recipient. If you are not the intended recipient, please be advised that you have received this in error and that any unauthorized review, distribution, printing, or copying of these Plans or any attached files is strictly prohibited.

POWERSCOUT™ 48 HD

NETWORKED MULTI-CIRCUIT METERING

REVENUE GRADE INSTRUMENTS FOR SUPERIOR ENERGY MEASUREMENT

c UL us LISTED E166827 CE

MAXIMUM FLEXIBILITY FOR MONITORING

The PowerScout 48 HD is a versatile, multi-channel instrument. The flexible design allows it to be configured for monitoring multiple electrical circuits. It can be supplied with any of DENT's internally-shunted, 333 mV output split-core or ROCoil CTs. Monitor any combination of up to 16 three-phase or 48 single-phase electrical devices with a single PowerScout HD. With data updates every 1 second and ANSI C12.20-2010 Class 0.2 revenue grade accuracy (depending on CT), the PowerScout 48 HD is well-suited for data center monitoring, tenant submetering, and for accountability metering in commercial, retail, and industrial facilities.

INDUSTRY-STANDARD MODBUS OR BACNET

The PowerScout 48 HD supports both Modbus (based on SunSpec IEEE-754) and BACnet communications protocols. Communications interface can be accomplished through standard serial RS-485 or Ethernet using either Modbus, BACnet MS/TP, Modbus TCP, or BACnet IP protocols. Additionally, the PowerScout 48 HD features two pulse inputs.

EASY INSTALLATION

Every PowerScout is line powered and designed to operate on any voltage from 90-600VAC. Unique to the PowerScout 48 HD are two independent voltage inputs, allowing for the monitoring of customer-derived voltage networks. Modbus & BACnet protocols are field-selectable and any combination of split-core or flexible ROCoil CTs can be used. Configure the meter prior to installation using the ViewPoint HD software utility and a direct USB connection or by using the built-in web server. Eliminate expensive trips back into the field: patented* PhaseChek™ ensures proper CT-to-phase installation the first time.

*U.S. Patent and Trademark Office Patent No. 7,612,552

DENT INSTRUMENTS

DEPENDABLE 5 YEAR WARRANTY

APPLICATIONS

- Data Centers
- Tenant Submetering
- Bi-Directional Metering
- Real-Time Power Monitoring in Commercial, Retail, and Industrial environments

FEATURES

- 48 channels: Multi-circuit submeter monitors voltage, current, power, energy, and many other electrical parameters on any combination of single and/or three-phase systems
- Two independent voltage inputs allow the PowerScout HD meter to be used on two systems simultaneously
- Line-Powered: 90-600V Phase-to-Phase Power Supply
- Revenue grade. ANSI C12.20-2010 Class 0.2
- Available with UL 94-V0 enclosure or as a circuit board on a mounting plate that helps facilitate easy, safe installation
- Safest installation ever: High-Voltage Cover offers additional level of protection
- The PowerScout HD uses both BACnet or Modbus protocol and features 2 digital pulse input ports. All models feature both serial and Ethernet.
- Floating Point: IEEE-754 data format allows for bidirectional monitoring and eliminates scaling factors
- Mix-and-match a full range of Split Core or ROCoil™ Rogowski-style CTs, including several revenue-grade options
- Display shows real-time information about the meter configuration and metered data
- PhaseChek™ confirms proper CT orientation
- UL Listed (enclosure version) or UL Recognized (plate and circuit board only version)
- CE Mark

POWERSCOUT™ 48 HD

KEY HARDWARE/SOFTWARE FEATURES

EASY DEPLOYMENT

Setting the PowerScout HD up for a new deployment has never been easier, thanks to two features:

Network Scan

Using ViewPoint HD Software, you can now quickly scan the local area network and find all the PowerScout HD meters installed on the network. The results page shows each meter's system description and even allows for some basic meter setup directly from the scan window. Use ViewPoint HD to give each meter a "friendly" name, such as "3rd Floor Utility Rm," to identify the right meter even faster.

Pre-Configuration

Maybe you have several meters that need to be configured the same way. Or, maybe you don't have the meter in your possession, but need to configure it ahead of time for an installer. It is now possible to build a meter configuration file without having a meter connected. This is especially helpful for teams who handle configuration and installation in two separate steps.

INTERVAL DATA RECORDING & RTC

The PowerScout HD Series features interval data recording of kWh. The meter's non-volatile memory stores up to 63 days of 15-minute kWh data that can be downloaded in the event of lost communication with the RTU. The CSV data file can be quickly downloaded through a direct USB or Ethernet connection using ViewPoint HD software and can be used to backfill any missing data. This feature works automatically in the background to record data - no configuration necessary.

In addition, the PowerScout HD Series has a capacitor-backed real-time clock (RTC) that is used to ensure an accurate time stamp on all recorded data records. Unlike other systems, there is no battery to change and the capacitor retains calendar time for up to 1 week. The clock can be synchronized with the PC clock during meter setup.

PULSE INPUTS

Correlate the consumption of a variety of systems using the standard dry contact pulse inputs. Configure each of the input channels independently with customizable units of measure (i.e., gallons) within ViewPoint HD Software. The PowerScout HD pulse inputs are compatible with "low speed" meters. PowerScout 48 HD meters (hardware revision I and later) are equipped with two pulse inputs.

ALARMS

The PowerScout HD power meter has the ability to set alarms on any meter channel. Alarms can be set through ViewPoint HD software to be triggered by voltage and/or current over or under events. The persistence setting is also adjustable within the software to allow start-up on transients.

POWERSCOUT™ 48 HD

ANATOMY

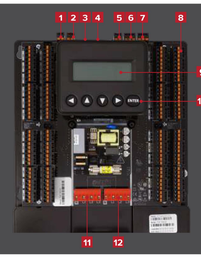

1. Pulse Input 1
2. Pulse Input 2
3. Ethernet
4. USB
5. 12V Out (2W)
6. RS-485
7. Alarm
8. CT Connections (x48)
9. Display
10. Navigation Buttons
11. Voltage Input 1
12. Voltage Input 2
13. Mounting Plate (Optional)
14. High Voltage Cover (IP30)
15. 1" EMT Conduit Connection
16. ABS Plastic Enclosure

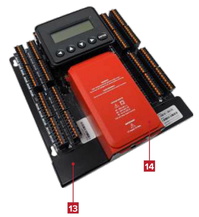

Detailed information about the PowerScout HD meter hardware and ViewPoint HD Software can be found in the Operator's Guide.

POWERSCOUT™ 48 HD SPECIFICATIONS

TECHNICAL	
SERVICE TYPE	Single Phase, Split Phase, Three Phase-Four Wire (WYE), Three Phase-Three Wire (Delta)
POWER	From L1-Phase to L2-Phase: 90-600VAC RMS CAT III 50/60Hz, 500mA AC Max. Use of 12 volt auxiliary output requires 100 VAC minimum input voltage.
AC PROTECTION	0.5A Fuse 200kA interrupt capacity
POWER OUT	Unregulated 12VDC output, 200 mA, self-resetting fuse.
VOLTAGE CHANNELS	90-346 Volts AC Line-to-Neutral, 600V Line-to-Line, CAT III. Two voltage reference inputs.
CURRENT CHANNELS	48 channels, 0.525 VAC max, 333 mV CTs, 0-4,000 Amps depending on CT
MAXIMUM CURRENT INPUT	150% of current transducer rating (mV CTs) to maintain accuracy. Measure up to 4000A with ROCoil CTs.
MEASUREMENT TYPE	True RMS using high-speed digital signal processing (DSP) with continuous sampling
LINE FREQUENCY	50/60 Hz (45-70 Hz measurable range). Measurement taken L1-N.
WAVEFORM SAMPLING	1.8 kHz
PARAMETER UPDATE RATE	1 second
MEASUREMENTS	Volts, Amps, kW, kVAR, kVA, ±PF, ±PF, kW demand, kVA demand, Import (Received) kWh, Export (Delivered) kWh, Net kWh, Import (Received) kVAh, Export (Delivered) kVAh, Net kVAh, Import (Received) kVARh, Export (Delivered) kVARh, Net kVARh, THD, Theta, Frequency. All parameters for each phase and element total
ACCURACY	0.2% ANSI C12.20-2010 Class 0.2
RESOLUTION	Values in IEEE-754 single precision floating point format (32 bit).
DISPLAY	Optional 4-line display, tri-color backlight (PhaseChek™)
ALARM OUTPUT	Over/Under Voltage & Current (SPDT Relay - 30 VDC)
PULSE INPUTS**	Two inputs. 3.3V sourcing voltage (current limited) to customer dry contact pulse output. Max pulse rate 10 Hz (50 mSec minimum transition time).

MECHANICAL	
WIRE CONNECTIONS	12-28 AWG 600 VAC. Voltage connection must be #14 AWG or larger & 600 VAC rated
MOUNTING	Panel Mount/Enclosure
HIGH VOLTAGE COVER	IP30. Available with PS48 Enclosure & Plate Models
OPERATING TEMPERATURE*	-20° to 60°C (-4° to 140°F)**
HUMIDITY	5% to 95% non-condensing
ENCLOSURE	ABS Plastic. 94-V0 flammability rating. Connections: 1" EMT conduit
ENCLOSURE DIMENSIONS	(L) 33.7cm x (W) 25.1cm x (H) 8.0 cm (13.3" x 9.9" x 3.1")
MOUNTING PLATE DIMENSIONS	(L) 26.2cm x (W) 24.1cm x (H) 8.0 cm (10.3" x 9.5" x 3.1")
PCBA DIMENSIONS	(L) 21.6cm x (W) 21.6cm x (H) 6.4 cm (8.5" x 8.5" x 2.5")

CERTIFICATIONS	
UL RECOGNIZED (E166827)	Applies to mounting plate and circuit board only version Conforms to UL Std 61010-1 3rd Edition Certified to CSA Std C22.2 No. 61010-1 3rd Edition
UL LISTED (E166827)	Applies to indoor enclosure version Conforms to UL Std 61010-1 3rd Edition Certified to CSA Std C22.2 No. 61010-1 3rd Edition
CE	EN 61000-6-4 Class A
ANSI C12.20 CLASS 0.2	NIST Traceable Calibration

COMMUNICATIONS	
HARDWARE	RS-485, Ethernet, and USB (for configuration only)
SUPPORTED PROTOCOLS	Modbus RTU, BACnet MS/TP, Modbus TCP or BACnet IP
MAX COMMUNICATION LENGTH	1200 meters with Data Range of 100K bits/second or less
COMMUNICATION RATE (BAUD)	9600 (Default), 19200, 38400, 57600, 76800, 115200
DATA BITS	8
PARITY	None, Even, Odd
STOP BIT	2, 1
TERMINATION	None provided

VIEWPOINT HD SOFTWARE	
OPERATING SYSTEM	Windows® 10, Windows® 8, Windows® 7
COMMUNICATIONS	USB & Ethernet standard. One USB Port required on PC.
SECURITY	2 levels of PIN protection (Read/Write or Read-Only)

ORDERING PART NUMBERS	
PS48HD-C-D-N	POWERSCOUT 48 HD, WITH ENCLOSURE + DISPLAY
PS48HD-C-N-N	POWERSCOUT 48 HD, WITH ENCLOSURE, NO DISPLAY
PS48HD-P-D-N	POWERSCOUT 48 HD, MOUNTING PLATE + DISPLAY
PS48HD-P-N-N	POWERSCOUT 48 HD, MOUNTING PLATE, NO DISPLAY

*At -20°C, LCD display could be illegible. Meter voltage @ -20°C must exceed 100 VAC to power the meter.
**Pulse inputs on PS48 meters Rev I or later.
***Colder temperatures require higher voltage to power the meter.

DISTRIBUTOR:
PLACE CONTACT INFO HERE

DENT Instruments, Inc.
Energy & Power Measurement Solutions
An ISO 9001:2008 Certified Company
925 SW EMKAY DRIVE
BEND, OREGON 97702 USA
541.388.4774 | 800.388.0770
www.DENTinstruments.com

© DENT Instruments, Inc.
PowerScout™, ViewPoint™, PhaseChek™ and ROCoil™ are trademarks of DENT Instruments, Inc.
All specifications subject to change without notice. rev121618

SOLAR ALTERNATIVES
5804 River Oaks Rd S
Elmwood, LA 70123
1-504-267-1660

General Notes

MICROGRID SYSTEM
WITH GROUND MOUNT PV

TABLE OF CONTENTS

PV-1.0 COVER PAGE
PV-1.1 GENERAL NOTES
PV-1.2 REFERENCE
PV-2.0 SITE PLAN
PV-3.0 SOLAR PLAN
PV-3.1 STRING PLAN
PV-3.2 SOLAR COMPONENTS
PV-3.3 SOLAR COMPONENTS
PV-3.4 SOLAR COMPONENTS
PV-5.0 EQUIPMENT PLAN
PV-5.1 PAD LAYOUT
PV-5.2 PAD DETAILS
PV-5.3 EQUIPMENT ROOM DETAIL
PV-5.4 EQUIPMENT ROOM ELEVATION
PV-5.5 EQUIPMENT ROOM ELEVATION
PV-5.6 EQUIPMENT ROOM ELEVATION
PV-5.7 OUTDOOR WALL ELEVATION
PV-6.0 ELECTRICAL DIAGRAM
PV-7.0 ELECTRICAL CALCULATIONS
PV-8.0 COMMUNICATIONS DIAGRAM
PV-9.0 PANELBOARDS
PV-10.0 EQUIPMENT DATA SHEETS

Acuvim-L

Multifunction Power & Energy Meter Datasheet

c UL us CE

ACCUENERGY

DESCRIPTION

Designed for a wide range of standard metering projects, the Acuvim L is a cost-effective, multifunction power meter that combines value and high-performance with easy integration into panel or device monitoring applications. With multiple communication options including Modbus-RTU, PROFIBUS, Modbus-TCP/IP, and BACnet-IP through optional expansion modules and revenue grade accuracy, the Acuvim L can be configured as either a panel-mount device, as a DIN rail mount transducer, or installed in a pre-configured, pre-wired AcuPanel for extreme protection in even the toughest application environments.

FEATURES

+ True RMS, revenue grade measurements: ANSI C12.20 class 0.5 & IEC 62053-22 class 0.5s
+ Multiple communication options including Modbus-TCP/IP, BACnet-IP, PROFIBUS, Modbus-RTU, I/O communications, and more
+ NEMA 3 front panel protection for installation in harsh environments
+ Available compatibility with multiple CT output options including 5A, 1A, 333mV, and Rogowski coils
+ Perform power quality analysis, measure individual harmonics up to the 63rd order, and monitor THD
+ Three form factors: Panel mount meter with digital display, DIN rail mount transducer, or in a pre-wired, pre-configured panel

SPECIFICATIONS

Metering

PARAMETERS	ACCURACY	RESOLUTION	RANGE
Voltage	0.2%	0.1V	20V~1000kV
Current	0.2%	0.001A	0~50000A
Current Demand	0.2%	0.001A	0~50000A
Power	0.5%	1W	-9999MW~9999MW
Reactive Power	0.5%	1var	-9999Mvar~9999Mvar
Apparent Power	0.5%	1VA	0~9999MVA
Power Demand	0.5%	1W	-9999MW~9999MW
Reactive Power Demand	0.5%	1var	-9999Mvar~9999Mvar
Apparent Power Demand	0.5%	1VA	0~9999MVA
Power Factor	0.5%	0.001	-1.0~1.0
Frequency	0.05%	0.01Hz	45~65Hz
Energy	0.5%	0.1kWh	0~99999999.9kWh
Reactive Power	0.5%	0.1kvarh	0~99999999.9kvarh
Apparent Energy	0.5%	0.1kVAh	0~99999999.9kVAh
Harmonics	1.0%	0.01%	
Meter Running Time		0.01hrs	0~9999999.99hrs
Load Running Time		0.01hrs	0~9999999.99hrs
Meter Total Running Time		0.01hrs	0~9999999.99hrs

Input

CURRENT INPUTS *(EACH CHANNEL)*

Nominal Current Options	①5A, ②1A, ③1A(333mV), ④1A (100mV Rope- CT), ⑤1A(80mA/100mA/200mA),
Metering Range	①0~10A, ②0~2A, ③0~1.2A, ④0~1.2A, ⑤0~1.2A, ⑥0~1.2A
Pickup Current	①5mA, ②1mA, ③5mA, ④5mA, ⑤5mA
Withstand	20A RMS continuous 100A RMS for 1 second, non-recurring
Burden	0.05VA (Typical) @ 5A RMS
Accuracy	0.2%

VOLTAGE INPUTS *(EACH CHANNEL)*

Nominal Full Scale	400Vac L-N, 690Vac L-L (+20%)
Withstand	1500Vac Continuous 2500Vac, 50/60Hz for 1 Minute
Input Impedance	2MΩ per phase
Metering Frequency	45Hz~65Hz
Pickup Voltage	10Vac
Accuracy	0.2%

ENERGY ACCURACY

Active	Class 0.5s (According to IEC 62053-22) Class 0.5 (According to ANSI C12.20)
Reactive	Class 2 (According to IEC 62053-23)

HARMONIC RESOLUTION

Metered Value	2ND~63RD harmonics

I/O Options

DIGITAL INPUT

Input Type	Dry Contact
Input Resistance	4kΩ
Input Current (Max)	7.5mA
Pulse Frequency (Max)	100Hz, 50% Duty Ratio
SOE Resolution	2ms

DIGITAL OUTPUT *(DO) (Photo-MOS)*

Voltage Range	0~250Vac/dc
Load Current	100mA (Max)
Output Frequency	25Hz, 50% Duty Ratio
Isolation Voltage	2500V

RELAY OUTPUT *(RO)*

Switching Voltage (Max)	250Vac, 30Vdc
Load Current	5A(R), 2A(L)
Set Time	10ms (Max)
Contact Resistance	30mΩ (Max)
Isolation Voltage	2500Vac
Mechanical Life	1.5x10⁷

SPECIFICATIONS

Control Power

AC/DC CONTROL POWER

Operating Range	100~415Vac, 50/60Hz; 100~300Vdc
Burden	3W
Frequency	50/60Hz
Withstand	3250Vac, 50/60Hz for 1 minute
Installation Category III (Distribution)	

LOW VOLTAGE DC CONTROL POWER *(OPTIONAL)*

Operating Range	20~60VDC
Burden	3W

Standard Compliance & Certifications

Measurement Standard	IEC 61036 Class 1, ANSI C12.16 Class 1.0
Environmental Standard	IEC 60068-2
Safety Standard	IEC 61010-1, UL 61010-1
EMC Standard	IEC 61000-4/2-3-4-5-6-8-11
Outlines Standard	DIN 43700, ANSI C39.1

Communications

RS-485 (Optional)	Modbus-RTU Protocol 2-wire connection, Half-duplex, Isolated 1200 to 38400 baud rate
Second RS-485 Port (Optional Module)	Option for Acuvim-CL, Acuvim-EL
PROFIBUS (Optional Module)	PROFIBUS-DP/V0 Protocol Works as PROFIBUS slave, baud rate adaptive, up to 12M Typical input bytes: 32, typical output bytes: 32 PROFIBUS standard according to EN 50170 Vol. 2
L-WEB (Optional Module) (Ethernet RJ45)	Protocol: Modbus-TCP/IP, DNP3.0 over IP V2, BACnet-IP, SNMP V3, HTTP/HTTPs post, FTP post, SMTP, NTP, HTTPs webserver; 4GB Datalogging memory

Operating Environment

Operating Temperature	-25°C to 70°C -13°F to 158°F
Storage Temperature	-40°C to 85°C -40°F to 176°F
Relative Humidity	5% to 95% Non-Condensing

FUNCTION LIST

● Functions ◆ Options , Blank: NA

	Function	Parameters	Acuvim-BL	Acuvim-CL	Acuvim-EL
Real Time Metering	Line to Neutral Voltages Uln	Uln 1, Uln 2, Uln 3, Uln avg	●	●	●
	Line to Line Voltages Ull	Ull 12, Ull 23, Ull 31, Ull avg	●	●	●
	Current	I 1, I 2, I 3, I n, I 4, I avg, I tot	●	●	●
	Active Power	watt 1, watt 2, watt 3, watt tot	●	●	●
	Reactive Power	var 1, var 2, var 3, var tot	●	●	●
	Apparent Power	va 1, va 2, va 3, va tot	●	●	●
	Power Factor	PF 1, PF 2, PF 3, PF	●	●	●
	Load Nature	L/C/R	●	●	●
	Frequency	F	●	●	●
Energy	Active Energy	Watt-hour Imp, Watt-hour Exp, Watt-hour Imp+Exp, Watt-hour Imp-Exp	●	●	●
		Watt-hour Q1, Watt-hour Q2, Watt-hour Q3, Watt-hour Q4		●	●
	Reactive Energy	Var-hour Imp, Var-hour Exp, Var-hour Imp+Exp, Var-hour Imp-Exp	●	●	●
		Var-hour Q1, Var-hour Q2, Var-hour Q3, Var-hour Q4		●	●
	Apparent Energy	VA-hour Imp, VA-hour Exp, VA-hour Imp+Exp, VA-hour Imp-Exp	●	●	●
		VA-hour Q1, VA-hour Q2, VA-hour Q3, VA-hour Q4		●	●
	Single-Phase Active Energy	Watt-hour Imp 1, Watt-hour Exp 1, Watt-hour Imp 2, Watt-hour Exp 2, Watt-hour Imp 3, Watt-hour Exp 3		●	●
	Single-Phase Reactive Energy	Var-hour Imp 1, Var-hour Exp 1, Var-hour Imp 2, Var-hour Exp 2, Var-hour Imp 3, Var-hour Exp 3		●	●
	Single-Phase Apparent Energy	VA-hour Imp 1, VA-hour Exp 1, VA-hour Imp 2, VA-hour Exp 2, VA-hour Imp 3, VA-hour Exp 3		●	●
Demand	Current Demand, Current Predicted Demand	I 1_Dmd, I 2_Dmd, I 3_Dmd, I 4_Dmd, I 1_Pre_Dmd, I 2_Pre_Dmd, I 3_Pre_Dmd, I 4_Pre_Dmd	●	●	●
	Power Demand, Power Predicted Demand	P_Dmd, Q_Dmd, S_Dmd, P_Pre_Dmd, Q_Pre_Dmd, S_Pre_Dmd	●	●	●
Time	Real Time Clock	Year, Month, Date, Hour, Minute, Second	●	●	●
Hour	Meter Running Time	Hour	●	●	●
	Load Running Time	Hour	●	●	●
Wiring Check	Voltage/Current Wiring	Each phase of V & I loss or error	●	●	●
Data Logger	1MB Memory				●

WIRING DIAGRAMS

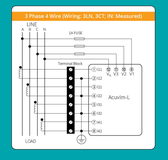

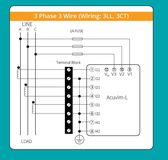

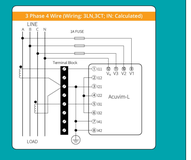

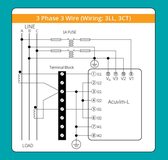

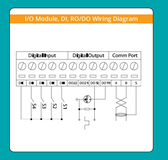

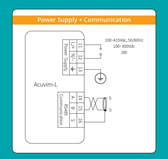

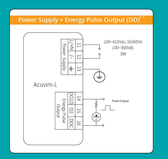

*Note: ** Wiring diagram is only applicable to Acuvim BL*

Revisions		
No.	Issue	Date
110822	REVIEW	
120222	REVIEW	
121222	REVIEW	
122022	REVIEW	

Project Name and Address

UNIVERSITY OF LOUISIANA AT LAFAYETTE-CLECO POWER
2008 HUTCHINSON AVE
CROWLEY, LA 70526

Drawn By Andrea Lee, Nick Boyd	Sheet PV-10.6
Date 09/15/2022	
Scale N/A	

CONFIDENTIALITY NOTICE: These plans and any documents transmitted with them may contain PRIVILEGED or CONFIDENTIAL information and may be read or used only by the intended recipient. If you are not the intended recipient, please be advised that you have received this in error and that any unauthorized review, distribution, printing, or copying of these Plans or any attached files is strictly prohibited.

ETAP iCE Gateway (GW) Specification

ETAP iCE Gateway is designed to collect data from multiple devices and protocols and convert them to a single output protocol. It is available with multiple communication options including embedded Ethernet switches and built-in 4G/3G/GPRS modem. Direct IO capability can added using iRTUe devices.

Applications:
- Data Concentrator (Gateway)
- Bay Control Unit (BCU)

Features:
- IEC 62351 Cyber security compliance
- IEC61850-3 EMC compliant
- IEC61131-3 PLC automation programming
- IEEE1588 and NTP time synchronization
- Microseconds timestamp resolution and high
- Accuracy RTC with 1.5ppm time drift
- Two separate Ethernet interfaces with independent
- MAC address and multiple IP address configuration
- Internal switch with HSR/PRP/RSTP redundancy
- Multiple communication media support (serial, 10/100TX
- Ethernet, FX100 Ethernet, GPRS, 3G & 4G modems)
- Support for VLAN and VPN connections

Group	Item	Description
General	Configuration & Maintenance	Easy configuration with iConf tool. Internal web server, allowing the real time monitoring of the system and all internal parameters. Command console with complete information of packet exchange, on all available protocols. Local or remote maintenance connection using USB or Ethernet ports.
General	RTC	High accuracy real time clock with 1.5ppm drift and microseconds resolution timestamp.
General	CPU features	ARM Cortex-A7 @ 528MHz, with 4GBytes Flash and 256MBytes RAM.
General	Communication ports options	**Serial ports:** up to 4 ports with RS232/RS485/RS422 selected by software. **Wireless connection:** internal 4G(LTE), 3G and GPRS modem. **Ethernet:** (2) 10/100BaseTX ports with independent MAC addresses. **Internal Ethernet Switch:** up to (4) 10/100BaseTX ports with RJ45 connection and (2) FX100 with ST, SC connectors or SFP interface, and supporting RSTP, HSR and PRP configurations.
Software application	Time synchronization	**Server:** NTP, IEC60870-5-101, IEC60870-5-104, DNP3.0, NTP. **Client:** IEEE1588(PTP), SNTP, IEC60870-5-101, IEC60870-5-102, IEC60870-5-103, IEC60870-5-104, DNP3.0, DLMS, Procome and Profibus DP.
Software application	Redundancy	IRTU can be deployed on a hot-standby configuration, and including an optional redundant power supply.
Software application	Security	IEC 62351-3 and IEC 62351-5 support, including TLS/SSL, SSH and VPN connections.
Software application	IEC61131-3 Automation	Logic and PLC programming, with LD, FBD, ST and SFC editor.
Software application	Logical and mathematical expressions	LUA language for creating simple and complex logic and mathematical expressions.
Device features	Power consumption	Depending on the model.
Device features	Power supply	W: wide range, 32 - 250Vdc / 80 - 250Vac (2.5kVrms isolation) 24: 19.5-60Vdc (2.5kVrms isolation)
Device features	EMC type test	IEC 60950-1, IEC 60255-5:2000, IEC 60255-22:2000, EN 55022, IEC 61000-6-4, IEC 61000-6-5, IEC 61000-4-2, IEC 61000-4-3, IEC 61000-4-4, IEC 61000-4-5, IEC 61000-4-6, IEC 61000-4-8, IEC 61000-4-9, IEC 61000-4-10, IEC 61000-4-12, IEC 61000-4-16, IEC 61000-4-17, IEC 61000-4-18, IEC 61000-4-29
Device features	Environmental	Operating temperature : -25ºC to +70ºC IEC 60068-2-1, IEC 60068-2-2, IEC 60068-2-3, IEC 60068-2-14, IEC 60068-2-30, IEC 60068-2-38
Device features	Vibration & Shock test	IEC 60068-2-6, IEC 60068-2-7
Device features	Physical	External dimensions: 173 x 137 x 78.4 (mm) DIN Rail mounting

ETAP iCE Gateway (GW) Specification

Bottom View / Top View

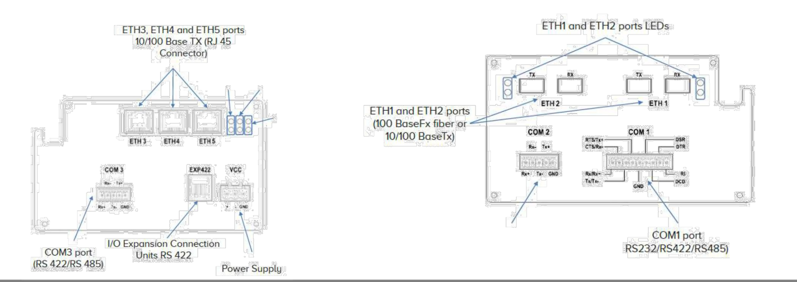

Front View

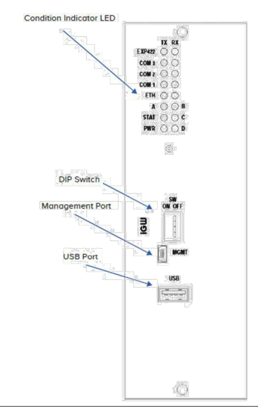

Ordering Information

iCE GW-b#bbvvfs

Main board + communications
- B#01 : (2) 10/100BaseTX RJ45 Ethernet + (4) serial RS232/RS485/RS422 ports
- B#11 : (2) 10/100BaseTX RJ45 Ethernet + (2) serial RS232/RS485/RS422 ports
- S#01 : PRP/HSR switch with (4) 10/100BaseTX and (2) FX100 Ethernet + (4) serial RS232/RS485/RS422 ports
- S#31 : RSTP switch with (3) 10/100BaseTX and (2) FX100 Ethernet + (4) serial RS232/RS485/RS422 ports
- M#01 : 2G modem + (2) 10/100BaseTX Ethernet + (3) serial RS232/RS485/RS422 ports
- M#11 : 3G modem + (2) 10/100BaseTX Ethernet + (3) serial RS232/RS485/RS422 ports
- M#21 : 4G(LTE) modem + (2) 10/100BaseTX Ethernet + (3) serial RS232/RS485/RS422 ports

Power supply
- 24 : 19.2-60 Vdc
- WV : 32-250Vdc // 80-250Vac

SD card
- S : Internal 8 GB microSD card
- 0 : No SD card

Fiber optic interfaces (S models)
- T : ST connectors
- C : SC connectors
- F : SFP interface
- 0 : No fiber optics available

SMAART POWER
INTELLIGENT & INVENTIVE ENGINEERING

Microgrid Communication Signals

The following table shows the list of the monitored and controlled devices and the communication signals for each asset required for typical operation of microgrid controller. Alarms and additional signals will be also collected from each asset for monitoring and operation purpose but it is not required as part of the main operation of microgrid controller.

Asset	Controlled	Monitored	Monitored Signals	Controlled Signals
Diesel Generator	X	X	V_mag	P_ref
			V_ang	Q_ref
			P or I_mag	Start/Stop
			Q or I_ang	
			Online Status	
			Isoc/Droop	Isoc/Droop
			Fuel Level	
			Fuel Cost (To be Set by User)	
BESS	X	X	V_mag	P_ref
			V_ang	Q_ref
			P or I_mag	
			Q or I_ang	
			SOC	
			OprMode (Grid Following/Forming)	OprMode Ref (Grid Following/Forming)
			Online Status	
PV	X	X	V_mag	P_ref
			V_ang	Q_ref

SMAART POWER
INTELLIGENT & INVENTIVE ENGINEERING

Asset	Controlled	Monitored	Monitored Signals	Controlled Signals
			P or I_mag	
			Q or I_ang	
			P_available If curtailment is possible and required.	
			Online Status	
Load	X	X	V_mag	P_ref if controllable or shed-able
			V_ang	Q_ref if controllable or shed-able
			P or I_mag	
			Q or I_ang	
			Online Status	
PCC		X	V_mag	
			V_ang	
			P or I_mag	
			Q or I_ang	
			Online Status	
Circuit Breaker	X	X	Status	Close/Open

etap iCE™ RTUe

Remote Terminal Unit Expansion

RTUe is an auxiliary unit for data collection or SCADA servers that allow expansion of acquisition and command capabilities to fit the requirements for many applications or facilities. Each I/O board is equipped with a RS-422 serial expansion port or a duel Ethernet ST/SC connector to communicate with data collection servers, SCADA servers, and other I/O modules. Both use Modbus with events stack and timestamps or IEC 61850 GOOSE messaging.

Features

- iCE RTUe-D1D1: 48 Digital Inputs
- iCE RTUe-D1R1: 24 Digital Inputs + 8 Relay Outputs
- iCE RTUe-D1A1: 24 Digital Inputs + 8 Analog Inputs (0-20mA)
- I/O Expansion

I/O Expandability

I/O modules includes a RS-422 serial port to communicate with etap iCE, any data collection server, or SCADA server using a RS-422 expansion port. Connection is established with a 6-pair flat cable RJ12 connector. Each I/O auxiliary unit includes up to two I/O cards. Available I/O module configurations:

- 48 Digital Inputs
- 24 Digital Inputs + 8 Digital Output
- 24 Digital Inputs + 8 Analog Inputs (0-20mA)
- 16 Digital Outputs
- 16 Analog Inputs
- Other configurations upon request

etap iCE

Specification Data Sheet

Group	Item	Specification
General	CPU Features	32 bits microcontroller @ 40MHz
General	Communication Ports	(1) Serial RS-422 port to connect to RTU & GW devices (RS-422 Expansion port)
Digital Inputs	Isolation	2.5kV rms
Digital Inputs	Activation/Deactivation	ON when Vi>85%Vn OFF when Vi<60%Vn. Other levels upon request
Digital Inputs	Connectors	9 pin MVSTBR 2.5. Grouping digital inputs in isolated blocks of (8) inputs & (1) common terminal
Relay Outputs	Isolation	6kV rms
Relay Outputs	Contact	Dry
Relay Outputs	Connectors	4 pin MVSTBR 2.5 Grouping relay outputs in blocks of 2
Relay Outputs	Breaking Capacity	8A @ 220Vac. 8/0.3/0.12A @ 30/110/220Vdc
Analog Inputs	Isolation	2.5kV rms
Analog Inputs	Accuracy	0.15%
Analog Inputs	Connectors	4 pin MVSTBR 2.5 Grouping analog inputs in blocks of 2
Analog Inputs	Ranges	+/-20mA, +/-5mA, +/-10Vdc
Device Features	Power Consumption	Less than 3W
Device Features	Power Supply	W: wide range, 32 - 250Vdc / 80 - 250Vac (2.5kVrms isolation) 24: 19.5-60Vdc (2.5kVrms isolation)
Device Features	EMC Type Test	IEC 60950-1 IEC 60255-5:2000, EC 60255-22:2000, EN 55022 IEC 61000-6-4, IEC 61000-6-5, IEC 61000-4-2, IEC 61000-4-3, IEC 61000-4-4, IEC 61000-4-5, IEC 61000-4-6, IEC 61000-4-8, IEC 61000-4-9, IEC 61000-4-10, IEC 61000-4-12, IEC 61000-4-16, IEC 61000-4-17, IEC 61000-4-18, IEC 61000-4-29
Device Features	Environmental	Operating temperature : -25ºC to +70ºC IEC 60068-2-1, IEC 60068-2-2, IEC 60068-2-3, IEC 60068-2-14, IEC 60068-2-30, IEC 60068-2-38
Device Features	Vibration & Shock Test	IEC 60068-2-6, IEC 60068-2-7
Device Features	Physical	External dimensions: 173 x 137 x 78.4mm DIN rail mounting

etap iCE

Top View

Bottom View

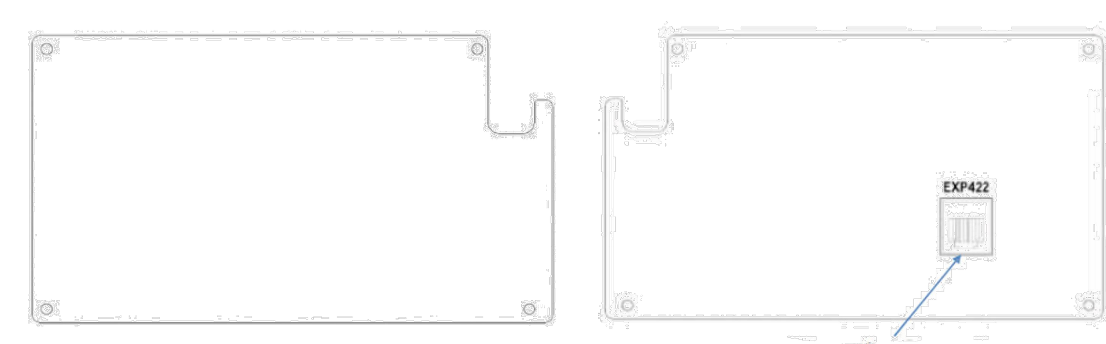

Front View

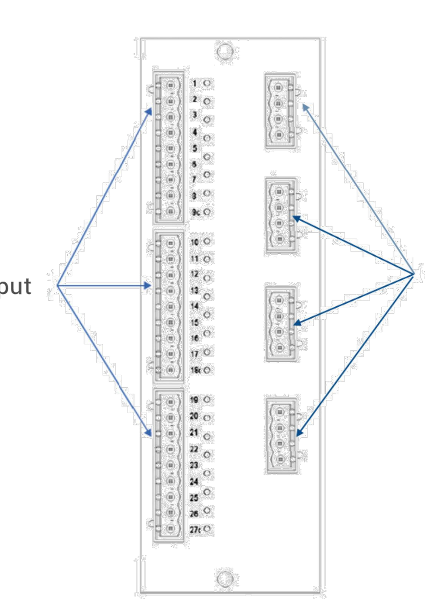

SOLAR ALTERNATIVES
5804 River Oaks Rd S
Elmwood, LA 70123
1-504-267-1660

General Notes

MICROGRID SYSTEM
WITH GROUND MOUNT PV

TABLE OF CONTENTS

PV-1.0 COVER PAGE
PV-1.1 GENERAL NOTES
PV-1.2 REFERENCE
PV-2.0 SITE PLAN
PV-3.0 SOLAR PLAN
PV-3.1 STRING PLAN
PV-3.2 SOLAR COMPONENTS
PV-3.3 SOLAR COMPONENTS
PV-3.4 SOLAR COMPONENTS
PV-5.0 EQUIPMENT PLAN
PV-5.1 PAD LAYOUT
PV-5.2 PAD DETAILS
PV-5.3 EQUIPMENT ROOM DETAIL
PV-5.4 EQUIPMENT ROOM ELEVATION
PV-5.5 EQUIPMENT ROOM ELEVATION
PV-5.6 EQUIPMENT ROOM ELEVATION
PV-5.7 OUTDOOR WALL ELEVATION
PV-6.0 ELECTRICAL DIAGRAM
PV-7.0 ELECTRICAL CALCULATIONS
PV-8.0 COMMUNICATIONS DIAGRAM
PV-9.0 PANELBOARDS
PV-10.0 EQUIPMENT DATA SHEETS

Revisions		
No.	Issue	Date
110822	REVIEW	
120222	REVIEW	
121222	REVIEW	
122022	REVIEW	

Project Name and Address

UNIVERSITY OF LOUISIANA AT LAFAYETTE-CLECO POWER
2008 HUTCHINSON AVE
CROWLEY, LA 70526

Drawn By: Andrea Lee, Nick Boyd
Date: 09/15/2022
Scale: N/A
Sheet: PV-10.7

CONFIDENTIALITY NOTICE: These plans and any documents transmitted with them may contain PRIVILEGED or CONFIDENTIAL information and may be read or used only by the intended recipient. If you are not the intended recipient, please be advised that you have received this in error and that any unauthorized review, distribution, printing, or copying of these Plans or any attached files is strictly prohibited.

Equipment Data Sheets