Jefferson Parish
State of Louisiana

Bid Number 50–00141477

Two (2) Year Pre-Placed Contract for Emergency Repair and/or Replacement of Traffic Signal Systems Damaged as a Result of a Natural Disaster or Other State of Emergency for the West Bank of Jefferson Parish for the Traffic Engineering Division.

BID DUE: June 1, 2023 AT 2:00 PM

ATTENTION VENDORS!!!

Please review all pages and respond accordingly, complying with all provisions in the technical specifications and Jefferson Parish Instructions for Bidders and General Terms and Conditions. All bids must be received on the Purchasing Department's eProcurement site, www.jeffparishbids.net, by the bid due date and time. Late bids will not be accepted.

Jefferson Parish Purchasing Department
200 Derbigny Street
General Government Building, Suite 4400
Gretna, LA 70053
Donna Reamey
Email: Dreamey@jeffparish.net
Phone: 504-364-2684

IMPORTANT NOTICE TO ALL BIDDERS – CONTRACT REQUIREMENTS

If a new contract has not been executed by June 1st, of the year of the contract expiration, the existing contract shall automatically extend until the end of the calendar year.

Upon award of a contract to the lowest responsible bidder, the parties will enter into a non-exclusive contract and the Parish retains the right to obtain similar services from additional providers if necessary. The parties intend the Parish to procure other services from contractors when to do so would result in services being obtained in a more prompt and economic manner, due to the emergency nature of the work.

The Parish is not restricted from utilizing its own personnel and equipment or the personnel or equipment of other governmental entities or of any other entities or contractors when the services performed by those entities can be performed with greater speed or less cost to the Parish.

The Parish and all its municipalities including Grand Isle and Lafitte shall be able to utilize the contract.

It is understood that this contract will be utilized on an emergency basis only. Under no circumstances should bidders assume that this contract will be utilized for normal daily activities of Jefferson Parish.

As this is an emergency response contract, the actual work to be performed may significantly vary from the estimated quantities. Therefore, Jefferson Parish reserves the right to eliminate items of work and increase or decrease the estimated quantities for items of work to meet existing conditions without allowing for any reevaluation and adjustment to the unit prices for the individual items of work.

Parts and supplies for which there is no price or quantity included in the Agreement shall be paid for at a unit price or lump sum to be agreed upon in advance and in writing, by the PARISH and the CONTRACTOR. Where such price and sum cannot be agreed upon by both parties, the payment to do such work shall be based on a reasonable cost to be established based on historic documentation for similar parts and supplies, or the average cost for similar parts and supplies in the area, or published unit costs from a national cost estimating database.

As this is an emergency response contract, it is understood that the bidder must be able to support all required employees necessary to fulfill the

project requirements in a post-disaster environment, including but not limited to: fuel, food, housing, supplies, materials, etc.

Renewal Clause: If a new contract has not been executed by June 1st, of the year of the contract expiration, the existing contract shall automatically extend until the end of the calendar year.

SECTION 1

GENERAL MAST ARM REALIGNMENT

1.01 **DESCRIPTION.** This work consists of re-aligning primary and/or secondary mast arms which are leaning, twisted and/or misaligned as a result of a natural disaster or other state of emergency. This shall include, but not be limited to completion of electrical splices for severed signal cables in secondary arms. This **shall not** include alignment of signal heads or signal head replacement; those items shall be paid for under separate items. For severely leaning mast arms, a guy support system may be required to stabilize the mast arm foundation. Guy wire system shall include, but not be limited to, furnishing and installing guy anchors, guy cables, and three-bolt clamps.

1.02 **GENERAL.** The contractor work crews shall work in conjunction with Jefferson Parish Signal crews. The contractor shall be under the direct supervision of the Jefferson Parish Traffic Engineering Supervisor and the Jefferson Parish Signal Superintendents.

The contractor work crews shall report to the Jefferson Parish Sign and Signal Shop daily, unless otherwise notified, to obtain a list of thoroughfares requiring repair for the day.

The contractor's foreman shall be responsible for completing a work order for **each** day of work and shall turn the work order in to Jefferson Parish Traffic Engineering on a daily basis. The work order shall consist of the following:

1. Employee's full name and title for each employee on the job site.
2. Hourly rate for each employee on the job site.
3. Equipment used by the contractor, including but not limited to trucks, cranes, and any applicable signal equipment, and hourly charge for each.
4. Working hours for the day, including start time and end time for each location.
5. Work completed for the day at each location.

1.03 **MATERIALS, EQUIPMENT, AND INSTALLATION.** Technical Specification requirements for materials, equipment, and installation are detailed in the Appendix, Sheet Nos. APP-1 through APP-7.

1.04 **MEASUREMENT AND PAYMENT.** Payment will be made per each mast arm that was leaning, twisted, or misaligned which is successfully re-aligned and shall include all labor, materials, and equipment necessary to perform the work, including the completion of all necessary electrical splices for severed signal cables in secondary arms. Separate payment will be made per each installation of a guy wire system for stabilization of a mast arm foundation and shall include all labor, materials, and equipment necessary to perform the work.

Payment will be made under:

BID ITEM NO.	PAY ITEM	PAY UNIT
001	General Mast Arm Realignment	Each
007	Guy Wire Support System Installation for Mast Arm Foundation	Each

SECTION 2

SIGNAL HEAD INSTALLATION

2.01 **DESCRIPTION.** The Contractor shall furnish and install replacements for missing or damaged signal heads resulting from a natural disaster or state of emergency. This shall include, but not be limited to all incidental equipment required for mounting traffic signal heads on mast arms, span wires, pedestals, and pole shafts. If the Jefferson Parish Engineering Traffic Division can supply comparable signal heads, the contractor shall order replacements for the units used and deliver the replacements to Jefferson Parish upon their arrival. Each damaged signal head shall be carefully removed and returned to the Jefferson Parish Sign and Signal Facility, 2100 Dickory Avenue, Harahan, LA for salvage.

2.02 **GENERAL.** The contractor work crews shall work in conjunction with Jefferson Parish Signal crews. The contractor shall be under the direct supervision of the Jefferson Parish Traffic Engineering Supervisor and the Jefferson Parish Signal Superintendents.

The contractor work crews shall report to the Jefferson Parish Sign and Signal Shop daily, unless otherwise notified, to obtain a list of thoroughfares requiring repair for the day.

The contractor's foreman shall be responsible for completing a work order for **each** day of work and shall turn the work order in to Jefferson Parish Traffic Engineering on a daily basis. The work order shall consist of the following:

1. Employee's full name and title for each employee on the job site.
2. Hourly rate for each employee on the job site.
3. Equipment used by the contractor, including but not limited to trucks, cranes, and any applicable signal equipment, and hourly charge for each.
4. Working hours for the day, including start time and end time for each location.
5. Work completed for the day at each location.

2.03 **MATERIALS, EQUIPMENT, AND INSTALLATION.** Technical Specification requirements for materials, equipment, and installation are detailed in the Appendix, Sheet Nos. APP-1 through APP-7.

2.04 **MEASUREMENT AND PAYMENT.** Measurement will be per each new signal head installed as directed by this specification and shall include all labor, materials, and equipment necessary to perform the work. Removal and salvage of existing damaged signal heads will not be measured for payment.

Payment will be made under:

BID ITEM NO.	PAY ITEM	PAY UNIT
002	**Signal Head Installation**	**Each**

SECTION 3

SIGNAL HEAD REALIGNMENT

3.01 **DESCRIPTION.** The Contractor shall re-align existing traffic signal heads which are misaligned as a result of a natural disaster or state of emergency. This shall include, but not be limited to mast arm signal heads, pedestal signal heads, and/or span wire signal heads.

3.02 **GENERAL.** The contractor work crews shall work in conjunction with Jefferson Parish Signal crews. The contractor shall be under the direct supervision of the Jefferson Parish Traffic Engineering Supervisor and the Jefferson Parish Signal Superintendents.

The contractor work crews shall report to the Jefferson Parish Sign and Signal Shop daily, unless otherwise notified, to obtain a list of thoroughfares requiring repair for the day.

The contractor's foreman shall be responsible for completing a work order for **each** day of work and shall turn the work order in to Jefferson Parish Traffic Engineering on a daily basis. The work order shall consist of the following:

1. Employee's full name and title for each employee on the job site.
2. Hourly rate for each employee on the job site.
3. Equipment used by the contractor, including but not limited to trucks, cranes, and any applicable signal equipment, and hourly charge for each.
4. Working hours for the day, including start time and end time for each location.
5. Work completed for the day at each location.

3.03 **MATERIALS.** Technical Specification requirements for materials, equipment, and installation are detailed in the Appendix, Sheet Nos. APP-1 through APP-7.

3.04 **MEASUREMENT AND PAYMENT.** Measurement will be per each signal head re-aligned as directed by this specification and shall include all labor, materials, and equipment necessary to perform the work.

Payment will be made under:

BID ITEM NO.	PAY ITEM	PAY UNIT
003	Signal Head Realignment	Each

SECTION 4

MAST ARM FOUNDATION INSTALLATION

4.01 **DESCRIPTION.** The Contractor shall install mast arm and/or strain pole foundations complete with piles, repair and/or furnish and replace underground conduit, and furnish and install all applicable electrical cable. The foundations shall be installed in relative close proximity to the damaged foundation and therefore, minimal conduit should be required

4.02 **GENERAL.** The contractor work crews shall work in conjunction with Jefferson Parish Signal crews. The contractor shall be under the direct supervision of the Jefferson Parish Traffic Engineering Supervisor and the Jefferson Parish Signal Superintendents.

The contractor work crews shall report to the Jefferson Parish Sign and Signal Shop daily, unless otherwise notified, to obtain a list of thoroughfares requiring repair for the day.

The contractor's foreman shall be responsible for completing a work order for **each** day of work and shall turn the work order in to Jefferson Parish Traffic Engineering on a daily basis. The work order shall consist of the following:

1. Employee's full name and title for each employee on the job site.
2. Hourly rate for each employee on the job site.
3. Equipment used by the contractor, including but not limited to trucks, cranes, and any applicable signal equipment, and hourly charge for each.
4. Working hours for the day, including start time and end time for each location.
5. Work completed for the day at each location.

4.03 **MATERIALS.** Technical Specification requirements for materials, equipment, and installation are detailed in the Appendix, Sheet Nos. APP-1 through APP-7.

4.04 **MEASUREMENT AND PAYMENT.** Measurement will be per each mast arm or strain pole foundation installed as directed by this specification and shall include all labor, materials, and equipment necessary to perform the work, including repairing and/or furnishing and replacing underground conduit, and furnishing and installing all applicable electrical cable.

Payment will be made under:

BID ITEM NO.	PAY ITEM	PAY UNIT
004	**Pile Supported Mast Arm Foundation Installation (30" Diameter)**	**Each**
005	**Pile Supported Mast Arm Foundation Installation (36" Diameter)**	**Each**

SECTION 5

CONTROL CABINET INSTALLATION

5.01 **DESCRIPTION.** The Contractor shall install a TYPE P Controller cabinet and related equipment to replace an existing controller cabinet and related equipment which has been damaged as a result of a natural disaster or other state of emergency. Related equipment shall include, but not be limited to load switches, transfer relays, communication panel, and detector harnesses wired for 8 phase, 4 overlap operation.

5.02 **GENERAL.** The contractor work crews shall work in conjunction with Jefferson Parish Signal crews. The contractor shall be under the direct supervision of the Jefferson Parish Traffic Engineering Supervisor and the Jefferson Parish Signal Superintendents.

The contractor work crews shall report to the Jefferson Parish Sign and Signal Shop daily, unless otherwise notified, to obtain a list of thoroughfares requiring repair for the day.

The contractor's foreman shall be responsible for completing a work order for **each** day of work and shall turn the work order in to Jefferson Parish Traffic Engineering on a daily basis. The work order shall consist of the following:

1. Employee's full name and title for each employee on the job site.
2. Hourly rate for each employee on the job site.
3. Equipment used by the contractor, including but not limited to trucks, cranes, and any applicable signal equipment, and hourly charge for each.
4. Working hours for the day, including start time and end time for each location.
5. Work completed for the day at each location.

5.03 **MATERIALS.** Technical Specification requirements for materials, equipment, and installation are detailed in the Appendix, Sheet Nos. APP-1 through APP-7.

5.04 **MEASUREMENT AND PAYMENT.** Measurement will be per each Type P controller cabinet with related equipment installed as directed by this specification and shall include all labor, materials, and equipment necessary to perform the work.

Payment will be made under:

BID ITEM NO.	PAY ITEM	PAY UNIT
006	**Controller Cabinet Installation**	**Each**

SECTION 6

ELECTRICAL SERVICE

6.01 **DESCRIPTION.** The Contractor shall install an electrical service and related equipment for a traffic signal system. Related equipment shall include, but not be limited to, rigid aluminum conduit, meter pan, service box and breakers, and service wire.

6.02 **GENERAL.** The contractor work crews shall work in conjunction with Jefferson Parish Signal crews. The contractor shall be under the direct supervision of the Jefferson Parish Traffic Engineering Supervisor and the Jefferson Parish Signal Superintendents.

The contractor work crews shall report to the Jefferson Parish Sign and Signal Shop daily, unless otherwise notified, to obtain a list of thoroughfares requiring repair for the day.

The contractor's foreman shall be responsible for completing a work order for **each** day of work and shall turn the work order in to Jefferson Parish Traffic Engineering on a daily basis. The work order shall consist of the following:

1. Employee's full name and title for each employee on the job site.
2. Hourly rate for each employee on the job site.
3. Equipment used by the contractor, including but not limited to trucks, cranes, and any applicable signal equipment, and hourly charge for each.
4. Working hours for the day, including start time and end time for each location.
5. Work completed for the day at each location.

6.03 **MATERIALS.** Technical Specification requirements for materials, equipment, and installation are detailed in the Appendix, Sheet Nos. APP-1 through APP-7.

6.04 **MEASUREMENT AND PAYMENT.** Measurement will be per each electrical service with related equipment installed as directed by this specification and shall include all labor, materials, and equipment necessary to perform the work.

Payment will be made under:

BID ITEM NO.	PAY ITEM	PAY UNIT
008	**Electrical Service**	**Each**

SECTION 7

OVERHEAD SIGNAL SPAN WIRE SYSTEM INSTALLATION

7.01 **DESCRIPTION.** The Contractor shall install an overhead signal span wire system which shall include, but not be limited to, furnishing and installing span messenger cable, signal cable, cable clamps, cable hangers, and disconnect boxes.

7.02 **GENERAL.** The contractor work crews shall work in conjunction with Jefferson Parish Signal crews. The contractor shall be under the direct supervision of the Jefferson Parish Traffic Engineering Supervisor and the Jefferson Parish Signal Superintendents.

The contractor work crews shall report to the Jefferson Parish Sign and Signal Shop daily, unless otherwise notified, to obtain a list of thoroughfares requiring repair for the day.

The contractor's foreman shall be responsible for completing a work order for **each** day of work and shall turn the work order in to Jefferson Parish Traffic Engineering on a daily basis. The work order shall consist of the following:

1. Employee's full name and title for each employee on the job site.
2. Hourly rate for each employee on the job site.
3. Equipment used by the contractor, including but not limited to trucks, cranes, and any applicable signal equipment, and hourly charge for each.
4. Working hours for the day, including start time and end time for each location.
5. Work completed for the day at each location.

7.03 **MATERIALS.** Technical Specification requirements for materials, equipment, and installation are detailed in the Appendix, Sheet Nos. APP-1 through APP-7.

7.04 **MEASUREMENT AND PAYMENT.** Measurement will be per each overhead signal span wire system installed as directed by this specification and shall include all labor, materials, and equipment necessary to perform the work.

Payment will be made under:

BID ITEM NO.	PAY ITEM	PAY UNIT
009	Overhead Signal Span Wire System	Each

SECTION 8

MAST ARM, STRAIN POLE, AND PEDESTAL INSTALLATION

8.01 **DESCRIPTION.** The Contractor shall install a traffic signal mast arm, pedestal, or strain pole. This shall include supplying the mast arm or pedestal shaft. However, if the Jefferson Parish Engineering Traffic Division can supply a comparable mast arm/pedestal shaft, the contractor shall order a replacement and deliver the replacement to Jefferson Parish upon its arrival. Jefferson Parish shall supply all strain poles.

8.02 **GENERAL.** The contractor work crews shall work in conjunction with Jefferson Parish Signal crews. The contractor shall be under the direct supervision of the Jefferson Parish Traffic Engineering Supervisor and the Jefferson Parish Signal Superintendents.

The contractor work crews shall report to the Jefferson Parish Sign and Signal Shop daily, unless otherwise notified, to obtain a list of thoroughfares requiring repair for the day.

The contractor's foreman shall be responsible for completing a work order for **each** day of work and shall turn the work order in to Jefferson Parish Traffic Engineering on a daily basis. The work order shall consist of the following:

1. Employee's full name and title for each employee on the job site.
2. Hourly rate for each employee on the job site.
3. Equipment used by the contractor, including but not limited to trucks, cranes, and any applicable signal equipment, and hourly charge for each.
4. Working hours for the day, including start time and end time for each location.
5. Work completed for the day at each location.

8.03 **MATERIALS.** Technical Specification requirements for materials, equipment, and installation are detailed in the Appendix, Sheet Nos. APP-1 through APP-7.

8.04 **MEASUREMENT AND PAYMENT.** Measurement will be per each traffic signal mast arm, pedestal shaft, or strain pole installed as directed by this specification and shall include all labor, materials, and equipment necessary to perform the work.

Payment will be made under:

BID ITEM NO.	PAY ITEM	PAY UNIT
010	Traffic Signal Mast Arm (Arm Length 25 Ft or Less)	Each
011	Traffic Signal Mast Arm (Arm Length 30 Ft or 35 Ft)	Each
012	Traffic Signal Mast Arm (Arm Length 40 Ft or 45ft)	Each
013	Traffic Signal Pedestal Shaft	Each
014	Traffic Signal Strain Pole	Each
015	Traffic Signal Double Mast Arm (Primary and Secondary Arm Lengths 20 Ft or Less)	Each
016	Traffic Signal Double Mast Arm (Primary Arm Length 25 Ft or 30 Ft; Secondary Arm Length 30 Ft or Less)	Each
017	Traffic Signal Double Mast Arm (Primary Arm Length 35 Ft; Secondary Arm Length 35 Ft or Less)	Each
018	Traffic Signal Double Mast Arm (Primary Arm Length 40 Ft or 45 Ft; Secondary Arm Length 45 Ft or Less)	Each

SECTION 9

MAST ARM, STRAIN POLE, AND PEDESTAL BASE INSTALLATION

9.01 **DESCRIPTION.** The Contractor shall install a traffic signal mast arm, pedestal, or strain pole base. This shall include removing and disposing of the existing base, and supplying the new base. However, if the Jefferson Parish Engineering Traffic Division can supply a comparable base assembly, the contractor shall order a replacement and deliver the replacement to Jefferson Parish upon its arrival.

9.02 **GENERAL.** The contractor work crews shall work in conjunction with Jefferson Parish Signal crews. The contractor shall be under the direct supervision of the Jefferson Parish Traffic Engineering Supervisor and the Jefferson Parish Signal Superintendents.

The contractor work crews shall report to the Jefferson Parish Sign and Signal Shop daily, unless otherwise notified, to obtain a list of thoroughfares requiring repair for the day.

The contractor's foreman shall be responsible for completing a work order for **each** day of work and shall turn the work order in to Jefferson Parish Traffic Engineering on a daily basis. The work order shall consist of the following:

1. Employee's full name and title for each employee on the job site.
2. Hourly rate for each employee on the job site.
3. Equipment used by the contractor, including but not limited to trucks, cranes, and any applicable signal equipment, and hourly charge for each.
4. Working hours for the day, including start time and end time for each location.
5. Work completed for the day at each location.

9.03 **MATERIALS.** Technical Specification requirements for materials, equipment, and installation are detailed in the Appendix, Sheet Nos. APP-1 through APP-7.

9.04 **MEASUREMENT AND PAYMENT.** Measurement will be per each traffic signal mast arm, pedestal shaft, or strain pole base installed as directed by this specification and shall include all labor, materials, and equipment necessary to perform the work.

Payment will be made under:

BID ITEM NO.	PAY ITEM	PAY UNIT
019	Traffic Signal Base	Each

SECTION 10

TRAFFIC SIGNAL CABLE

10.01 **DESCRIPTION.** The Contractor shall furnish traffic signal cable for installation as directed by the Traffic Division.

10.02 **GENERAL.** The contractor work crews shall work in conjunction with Jefferson Parish Signal crews. The contractor shall be under the direct supervision of the Jefferson Parish Traffic Engineering Supervisor and the Jefferson Parish Signal Superintendents.

The contractor work crews shall report to the Jefferson Parish Sign and Signal Shop daily, unless otherwise notified, to obtain a list of thoroughfares requiring repair for the day.

The contractor's foreman shall be responsible for completing a work order for **each** day of work and shall turn the work order in to Jefferson Parish Traffic Engineering on a daily basis. The work order shall consist of the following:

1. Employee's full name and title for each employee on the job site.
2. Hourly rate for each employee on the job site.
3. Equipment used by the contractor, including but not limited to trucks, cranes, and any applicable signal equipment, and hourly charge for each.
4. Working hours for the day, including start time and end time for each location.
5. Work completed for the day at each location.

10.03 **MATERIALS, EQUIPMENT, AND INSTALLATION.** The contractor is to supply #12 AWG wire, IMSA specification No. 19-1 on traffic signal cable, stranded throughout, and color-coded throughout the system from the master controller to the signal heads. The cable shall contain either 5 or 7 conductors.

Outer casing of each cable to be color coded by wrapping a one inch (1") wide colored band of Mystic tape around each of the cables. The cable shall be marked with tape on each end.

10.04 **MEASUREMENT AND PAYMENT.** Measurement will be per linear foot of signal cable supplied to the Traffic Division.

Payment will be made under:

BID ITEM NO.	PAY ITEM	PAY UNIT
020	Traffic Signal Cable	Lin Ft

MATERIALS, EQUIPMENT, AND INSTALLATION REQUIREMENTS

The contractor shall repair and, when required, shall furnish and install the following:

A. All Jefferson Parish-maintained traffic signals including, but not limited to, mast arms, pedestal shafts and bases, signal heads (three, four, and five section heads as required), mast arm foundations, pedestal foundations, all related hardware required for installation of signal heads, mast arms and pedestals, all electrical connections (including installation of new electrical service), locating and repairing underground conduit, straightening mast arms and/or pedestals, and re-aligning signal heads, which existed prior to and were damaged as a result of a natural disaster or other state of emergency.

B. UNDERGROUND CONDUIT, SERVICE BOXES, AND ELECTRICAL:

All conduit and fittings for underground installation shall be schedule #40 polyvinyl chloride conduit (PVC).

All joints shall be solvent welded and watertight.

Conduit to be installed a minimum of three feet (3') below grade, unless otherwise specified by the Traffic Engineering Division. When boring operations are employed, the contractor shall bore from one side of the roadway to the other. All excavations on side of roadway shall be restored to their original condition.

Quazite Nestable, Round Manhole(s) (Part No. LR2732BA36) or approved equal, complete with covers marked "TRAFFIC". Covers shall be Heavy Duty and comprised of a skid resistant surface rated for no less than 15,000 pounds over a 10" square with a minimum applied test load of 12,000 pounds. The cover shall be secured to the enclosure using three 3/8-16 UNC stainless steel hex head bolts with washers. A minimum of six inches of gravel shall be installed in earth prior to setting the manholes. The gravel bed shall also extend two inches (2") beyond the walls of the manholes.

Service boxes (14" X 14" X 12.75) shall be Composolite, as manufactured by Quazite Corporation (Part No. PC1212BA12 with PC1212CA00 cover) or approved equal. Enclosures and covers shall be concrete gray color and rated for no less than 5000 pounds over a 10" X 10" area and be designed and tested to temperatures of –50 degrees Fahrenheit. Material compressive strength should be no less than 11000 psi. Covers shall be marked "TRAFFIC SIGNAL" and have a minimum coefficient of friction of 0.5. Covers to be attached using hex-head stainless steel bolts. Boxes to be stackable for extra depth. A minimum of six inches of gravel shall be installed in earth prior to setting the pull box. The gravel bed shall also extend two inches (2") beyond the walls of the box.

Service boxes (32.25" X 19.25" X 18") shall be Composolite as manufactured by Quazite Corporation (Part No. PG1730BA18 with PG1730ha00 cover) or approved equal. Enclosures and covers shall be concrete gray color and rated for no less than 5000 pounds over a 10" X 10" area and be designed and tested to temperatures of –50 degrees Fahrenheit. Material compressive strength should

be no less than 11,000 psi. Covers shall be marked "TRAFFIC SIGNAL" and have a minimum coefficient of friction of 0.5. Covers to be attached using hex-head stainless steel bolts. Boxes to be stackable for extra depth. A minimum of six inches of gravel shall be installed in earth prior to setting the pull box. The gravel bed shall also extend two inches (2") beyond the walls of the box.

Electrical service to controller, and signals to include:

1. Approximately thirty feet (30') of one and one-half inch (1-1/2" I.D.) *rigid aluminum* service conduit and fittings from the ground to the point of connection to the service drop conductors. Service conduit shall be equipped with a rain tight service head. The service head shall have conductors of different potential brought out through separately bushed openings. All service conduit to be secured to the utility pole with stainless steel straps. The PVC conduit is to connect to the service conduit four inches (4") below grade at the base of the utility pole and a PVC pipe adaptor is to be solvent welded to the PVC conduit. The one and one-half inch (1-1/2") *rigid aluminum* conduit is to extend to grade, connect through a one and one-half inch (1-1/2") "Type C" rigid aluminum conduit outlet body, and extend to the bottom of the load center.

   Grounding shall be done in accordance with guidelines set forth in the Jefferson Parish code of ordinances, and current edition of the NEC.

2. One (1) electric meter socket (if applicable). (3 wire 120/240 volt)

3. One (1) Square D #Q02-4L70RB load center and two (2) Square D #QO140 circuit breakers with Visi-Trip indicator (if applicable). ***Note: Load center and control cabinet to be wired as 120/240 volt and shall include an electrode-grounding conductor as required by Jefferson Parish ordinances, and current NEC guidelines.***

4. All service-entrance conductors and all feeder conductors shall be #8 AWG with one of the following types of insulation: THHN, THWN, RHH, RHW, USE.

   The contractor is to use #12 AWG wire, IMSA specification No. 19-1 on traffic signal cable, <u>stranded</u> throughout, and color-coded throughout the system from the master controller to the signal heads.

   Outer casing of each cable to be color coded by wrapping a one inch (1") wide colored band of Mystic tape around each of the cables. Each cable shall be marked with tape on each end.

C. FOUNDATIONS:

Each foundation shall include one (1) ten-foot (10') ground rod.

All foundations for the mast arm assemblies and controller shall be as per the attached details. Thirty-inch (30") diameter foundations shall be used for single mast arm assemblies with arm lengths of 35' or less. Thirty-six inch (36") diameter foundations shall be used for single mast arm assemblies with arm lengths of 40' or greater, and for all double mast arm assemblies. All foundations shall be Class S 3,800 psi concrete mix. The top of the foundation shall be a maximum of six inches (6") above grade. A lower elevation may be requested. Anchor bolts furnished with assemblies shall be installed according to manufacturer's specifications prior to pouring of concrete. **Only hexagonal nuts shall be used to**

secure the signal pole to the foundation. All PVC elbows to extend two inches (2") above the top and in the center of the foundation, and shall include a bell-end or other appropriate bushing. Concrete to be tamped while pouring and allowed to cure a minimum of seven (7) days before installation of the signal assembly.

All thirty inch (30") diameter mast arm foundations will each require a forty-foot (40') long creosote wood pile (ASTM D25-73 MP-2) with a butt circumference of approximately 50" (16" diameter). Each wood pile shall include two (2) A193 Grade B7, 1.75-20 UNC-2A threaded rods, twenty-four inches (24") in length, and installed as per the detail located in the Appendix, Page No. APP-8. Each rod shall be secured by appropriate fender washers and nuts as per the detail.

All thirty-six inch (36") diameter mast arm foundations will each require a forty-foot (40') long creosote wood pile (ASTM D25-73 MP-2) with a butt circumference of approximately 50" (16" diameter). Each wood pile shall include two (2) A193 Grade B7, 1.75-20 UNC-2A threaded rods, thirty inches (30") in length, and installed as per the detail located in the Appendix, Page No. APP-10. Each rod shall be secured by appropriate fender washers and nuts as per the detail.

The holes for all foundations requiring piles shall be drilled with an auger prior to pile installation. All PVC elbows to extend two inches (2") above the top and in the center of the foundation, and shall include a bell-end or other appropriate bushing.

D. SIGNAL POLE ASSEMBLIES:

1. Pedestal poles shall be Signal Engineering Inc. # SE-120 4-1/2" OD extruded aluminum shafts with #1660-A bases and foundations or approved equal. Pedestals to have 12-position, 24 terminal, terminal blocks on the base doors. Pedestal bases to be round. The base and shaft of the pedestal pole shall be threaded to match, and shall provide for attachment of equipment-grounding conductor as per Jefferson Parish ordinances, and current NEC guidelines. Only hexagonal nuts are to be used in securing the pedestal pole to the foundation.
2. The Parish of Jefferson shall furnish all 26' steel strain pole(s) with bolts and nuts as required. The contractor must pick up the materials at 2100 Dickory Avenue, Harahan, LA., and deliver them to the job site.
3. PELCO cantilever standard mast arm assembly(s) including shafts, arms, and transformer bases shall be as per the attached specification and shall be of length appropriate for the intersection requiring installation. The transformer base shall allow attachment of an equipment-grounding conductor as per Jefferson Parish ordinances, and current NEC guidelines.
4. PELCO cantilever standard double mast arm assembly(s) including shafts, primary arms, clamp-on arms, and transformer base(s) shall be as per the attached specifications. The transformer base shall allow attachment of an equipment-grounding conductor as per Jefferson Parish ordinances and current NEC guidelines.

   Holes to be provided for appropriate connection to signals on arms and shafts. Hole in pole shaft for side mount signals to be drilled 1" minimum diameter. Hole shall be filed to remove any metal burrs. A bushing or grommet shall be installed in any drilled hole on the mast arm. All parts of assemblies to be hot dipped galvanized.

E. OVERHEAD SIGNAL SPAN WIRE SYSTEMS:

Seven strand span wire cable three eighths inches (3/8") diameter, extra high strength, thirty percent (30%) conductivity, minimum breaking load 11,440 lbs., shall be used for suspension of signals and for messenger support for signal cable. The messenger cable shall comply with IMSA specifications No. 31-1956 on messenger cable; attachment of span wire cable shall be at a height so that the bottom of the signal shall be not less then seventeen feet (17'), nor more than seventeen feet, six inches (17' 6") above the street grade with a five percent (5%) sag in the messenger cable. The messenger cable shall attach around a Joslyn No. L504, 12,000 lb. mechanical strength strain insulator and be attached with a Joslyn No. J931-5/8""bolt, three bolt, galvanized guy clamp, or approved equal. Strain insulators shall be approximately six to eight feet from poles. Pole clamp or band for securing cable shall be galvanized or stainless steel and shall have a mechanical strength equal or greater than the span wire cable. Cable and guy clamps for attaching strain insulators to pole clamp or band shall conform as above. **Span wire between poles shall not be spliced.** Traffic signal cable shall be secured to span wire cable with galvanized cable clamps spaced every twelve inches (12").

IMSA 19-3, (#581854, 5 conductor, AWG 12, 7 strand) and IMSA 20-3 (#603730, 7 conductor, AWG 12, 7 strand) 600 V, Figure-8 Aerial, Integral Messenger cable is an acceptable replacement for separate span/cable runs.

All overhead signal cable shall be coiled at each pole and on each side of each disconnect hanger the cable passes through. Coil shall be a minimum of one complete revolution with a minimum diameter of twelve inches (12") and each coil shall be wrapped.

F. SIGNAL HEADS:

1. All signal heads to be dark green with fittings as follows:

   (a) SECO #S12A31 one-way, three section, 12" polycarbonate traffic signal heads with cap visors and SECO Series 40 model CM-42-3M mid-mast arm mounting brackets with 15" arms and back plates or approved equal.

   (b) McCain Signals #MTS-TP-304 PATV, one-way, three section, 12" aluminum traffic signal with cap visors for span wire mounting or approved equal. Signal to be equipped with back plates. Signal to be suspended with SECO South #6115 span wire hanger, one-half inch (1/2") diameter, with three-eighths diameter (3/8") cross pin, span clamp bolts, lock washer, and standard nuts, high tensile aluminum.

   (c) SECO #S12A31 one-way, three section, 12" polycarbonate traffic signal head with cap visors for mounting on side of steel strain pole or mast arm with brackets and back plates or approved equal.

   (d) SECO #S12A31 one-way, three section, 12" polycarbonate traffic signal heads with cap visors and slip fitters for mounting on aluminum pedestal poles or approved equal.

   (e) Mc Cain one-way, three section optically programmable Traffic signal with cap visors and slip fitters for mounting on aluminum pedestal poles or approved equal.

(f) Mc Cain one-way, three section optically programmable Traffic signal with cap visors and brackets for mounting on side of mast arm shaft or approved equal.

(g) Mc Cain one-way, three section optically programmable traffic signal with visors and SECO Series 40 model CM-42-3M mid-mast arm mounting bracket with 15" arm for mounting on mast arm, or approved equal.

(h) Mc Cain one-way, five-section optically programmable Traffic signal with cap visors and slip fitters for mounting on aluminum pedestal poles or approved equal.

(i) Mc Cain one-way, five-section optically programmable Traffic signal with cap visors and brackets for mounting on side of mast arm shaft or approved equal.

(j) Mc Cain one-way, five-section optically programmable traffic signal with visors and SECO Series 40 model CM-42-3M mid-mast arm mounting bracket with 15" arm for mounting on mast arm, or approved equal.

(k) SECO #S12A41 one-way, four section, 12" polycarbonate traffic signal head with cap visors and SECO Series 40 model CM-42-3M mid-mast arm mounting bracket with 15" arm and back plate or approved equal.

(l) SECO #S12A51 one-way, five section, 12" polycarbonate traffic signal head with cap visors and SECO Series 40 model CM-42-3M mid-mast arm mounting bracket with 15" arm and back plate or approved equal.

(m) SECO # M31555 one-way, aluminum pedestrian signal housing with door and vantage visor with SECO # 587-6127 bracket for mounting on the side of a mast arm shaft, or approved equal. HOUSING ONLY.

(n) SECO # M31555 one-way, aluminum pedestrian signal housing with door and vantage visor with slip-fitters for mounting on top of the aluminum pedestal shaft, or approved equal. HOUSING ONLY.

The top of the mounting brackets shall be blank or fitted with a weatherproof plug cap unless otherwise specified.

The reflectors shall be removed to facilitate the installation of LED lenses.

Each signal face shall be provided with a terminal strip equipped with a spare connector for connecting to the individual lamp socket leads.

Each signal head shall contain twelve (12) polymer lens clips (GGI Quick Change Clips QCK-12-PAK, or approved equal) – four (4) per LED lens. The lens clip assembly shall be constructed of an engineered automotive grade polymer designed for all environmental conditions (-40° F to +176° F).

The lens clip assembly shall surpass ITE wind loads for traffic signals without damage to the lens clip assembly.

The lens clip assembly shall be designed such that it securely holds round lens diameters of nominal 8" and 12" as well as undersized LED modules. The lens clip assembly shall firmly hold lens / gasket combinations of varying thickness from rotation and vibration.

The lens clips shall come with a lifetime warranty from the manufacturer.

Aluminum signal brackets and hardware shall be furnished with one coat of primer and two individual coats of dark green enamel.

The inside portion of all signal visors shall be finished in dull (non-reflective) black.

All traffic signal heads and mounting hardware shall use tri-stud or mono-stud connections. Studs shall be 5/16: diameter with 18 threads per inch.

Mounting brackets shall be of one-piece cast aluminum construction and shall provide for tri-stud connection to the signal sections.

2. LED Lenses:

All traffic signal heads except optically programmable heads, shall be equipped with DIALIGHT LED lenses as per the following part numbers:

TYPE LENS	PART NUMBER
12" RED BALL	433-1210-003XL
12" YELLOW BALL	433-3230-901XL
12" GREEN BALL	433-2220-001XL
12" RED ARROW	432-1314-001XOD
12" YELLOW ARROW	431-3334-901XOD
12" GREEN ARROW	432-2324-001-XOD
16" x 18" COUNTDOWN PEDESTRIAN SIGNAL	430-6479-001X

G. CONTROLLER CABINET:

Type P cabinet and related equipment shall meet the attached Jefferson Parish specifications for cabinet and cabinet-related items. The cabinet shall come fully equipped with load switches, transfer relays, communication panel, and detector harnesses.

Controller cabinet, and related equipment will be shop-tested by Jefferson Parish Traffic Engineering Division prior to field installation. Upon completion of testing period (two weeks after delivery), and once the cabinet foundation is prepared for cabinet installation, the contractor will pick up the cabinet (without controller), deliver it to the job site, and install it upon the appropriate foundation under supervision of Jefferson Parish Traffic Engineering Division.

H. All turns in PVC conduit to be made with thirty-six inch (36") long sweep elbows unless otherwise specified by the Traffic Engineering Division.

I. Standard elbows shall be used when entering all pull boxes.

J. Long sweep PVC elbows to be used when entering all foundations.

K. All signal cable to be continuous and unspliced from controller cabinet to appropriate transformer base. ***NOTE: NO SPLICES ARE TO BE MADE IN STRAIN POLES OR CONDUIT UNDER ANY CIRCUMSTANCES.**

L. One complete loop of cable shall be installed in all manholes, pull boxes, and transformer bases. The size of the loop shall be approximately equivalent to the inner diameter of the enclosure (i.e. pull box, manhole, etc.)

M. Exact horizontal and vertical location of all traffic signal heads, foundations, and detectors to be as specified by the Traffic Engineering Division.

N. All PVC conduits installed in mast arm foundations, cabinet foundations, pedestal foundations, and/or pull boxes shall include a bell-end or other appropriate bushing installed on the exposed end entering the fixture (i.e. transformer base, pull box, cabinet, etc.)

O. GUY WIRE SYSTEM

Seven strand guy cable three eighths inches (3/8") diameter, extra high strength, minimum breaking load 15,400 lbs., shall be used for guy support. The guy cable shall attach around a Joslyn No. J931-5/8""bolt, three bolt, galvanized guy clamp, or approved equal. The guy cable shall be anchored into the ground using a Joslyn welded screw anchor, No. J6585W rated for class 7 soil with an ultimate soil-anchor holding strength of 16,000 pounds.

Note: Attached are the following details:

Single Mast Arm Pile supported foundation Detail (30")

Single Mast Arm Anchor Base Detail (30")

Double Mast Arm Pile Supported Foundation Detail (36")

Double Mast Arm Anchor Base Detail (36")

Mast Arm Details

Pedestal Foundation Detail

Details of Manhole

Cabinet Foundation Detail

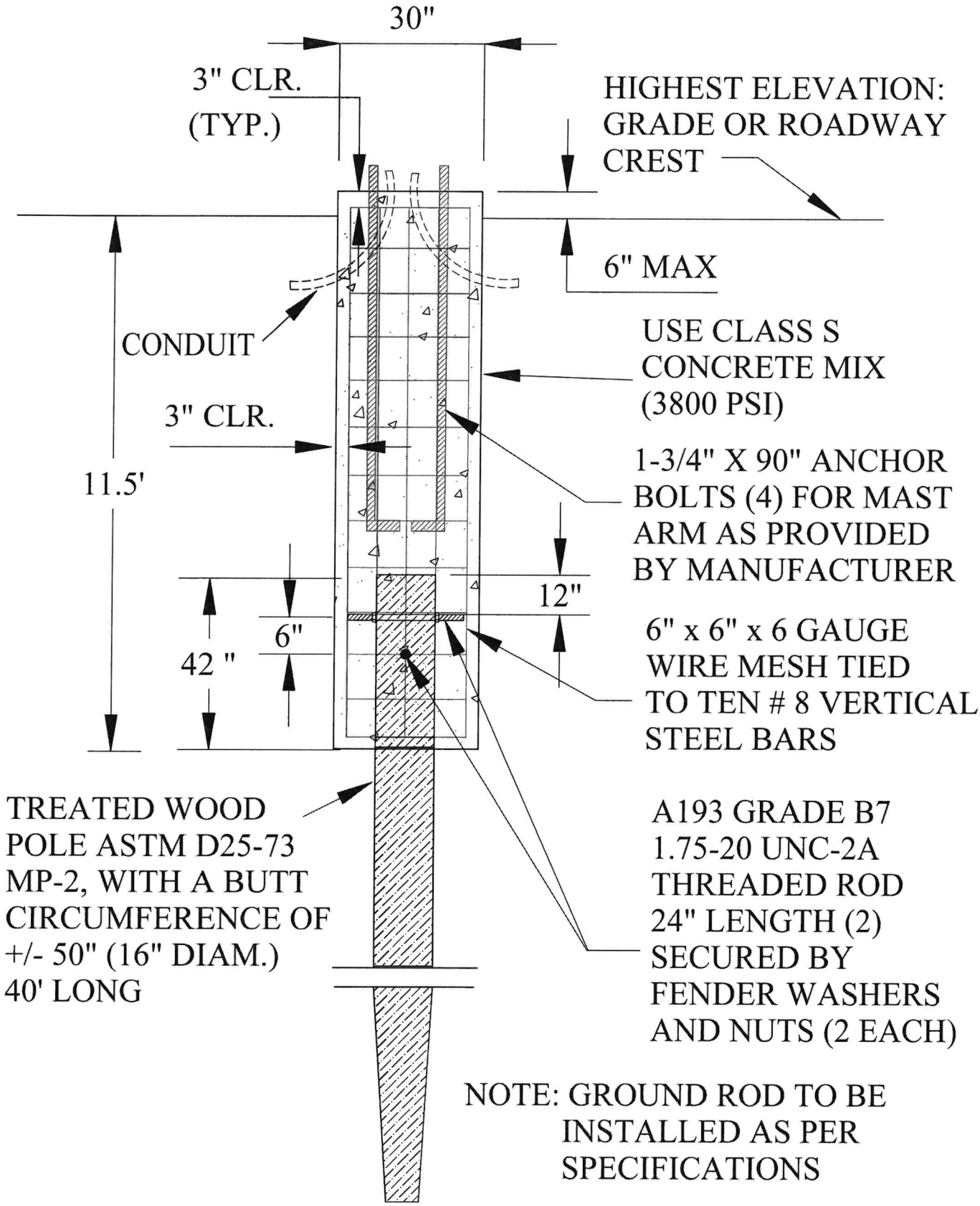

FOUNDATION PLAN 30"
(PILE SUPPORTED) (N.T.S.)

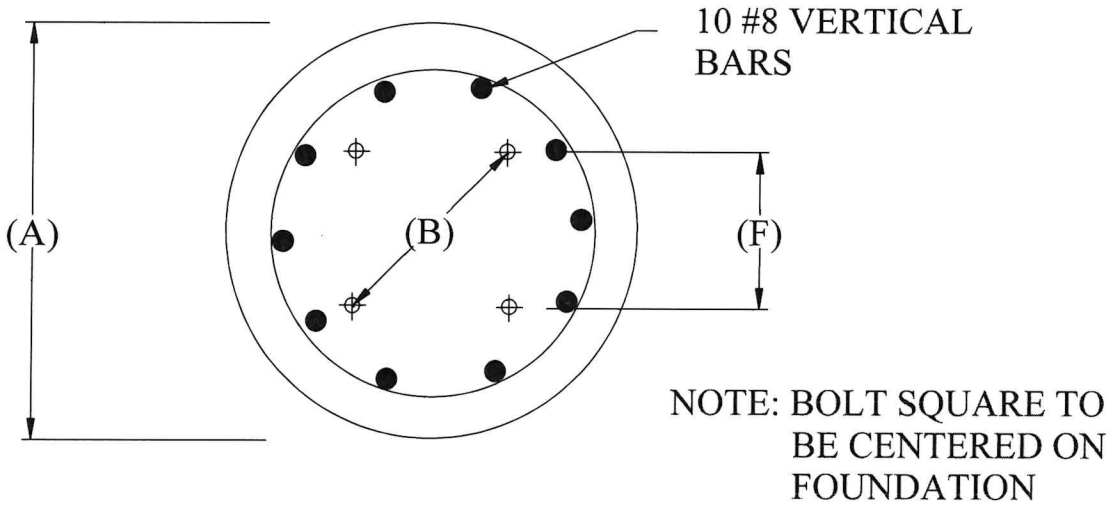

3.8 ksi CONCRETE

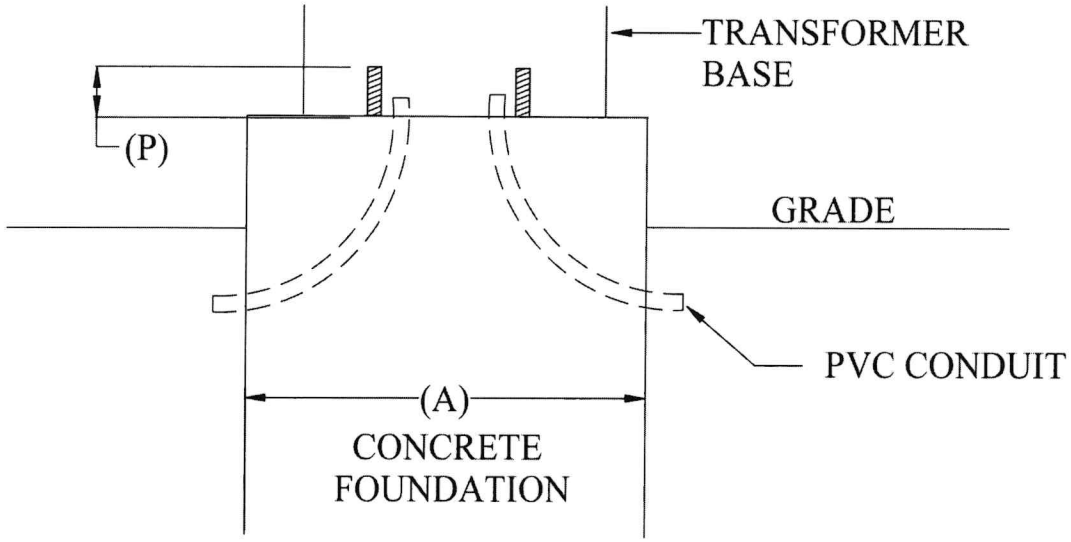

A: 30" DIAMETER FOUNDATION
B: 16" DIAMETER BOLT CIRCLE
F: 11-5/16" BOLT SQUARE
P: REFER TO MANUFACTURER'S SPEC FOR BOLT EXPOSURE

ANCHOR BASE DETAIL
30" FOUNDATION ASSEMBLY
(PILE SUPPORTED)
(N.T.S.)

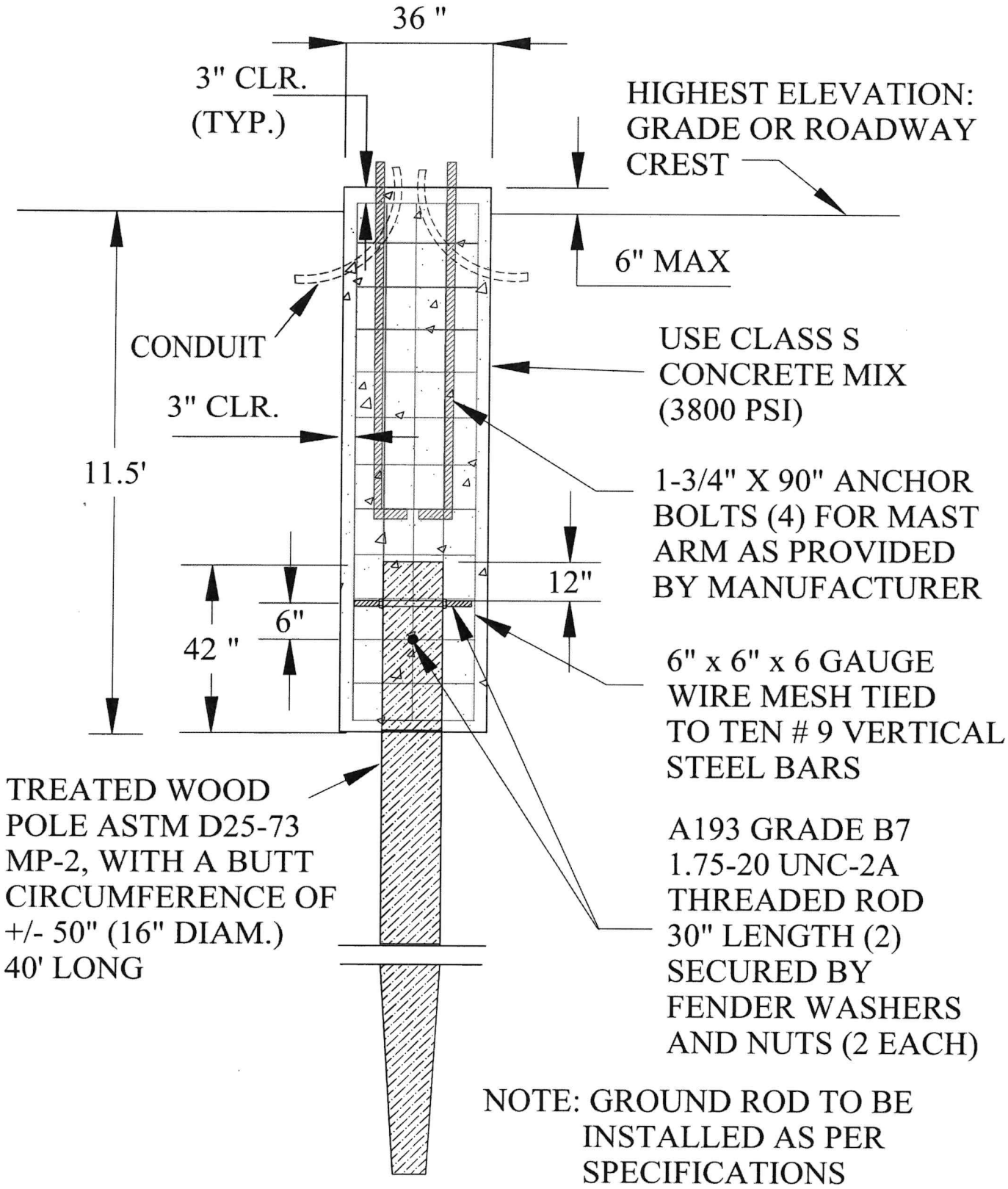

FOUNDATION PLAN 36"
(PILE SUPPORTED) (N.T.S.)

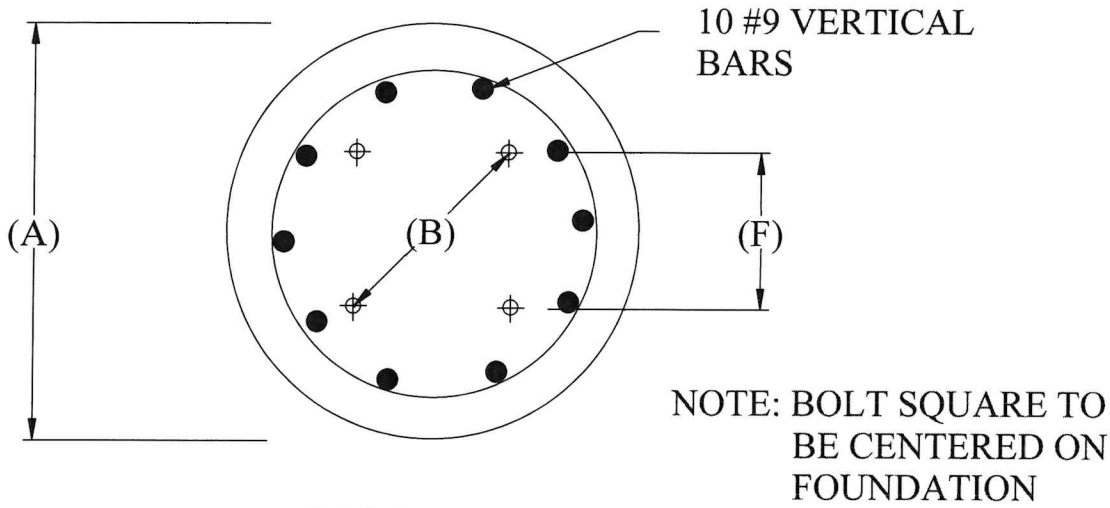

3.8 ksi CONCRETE

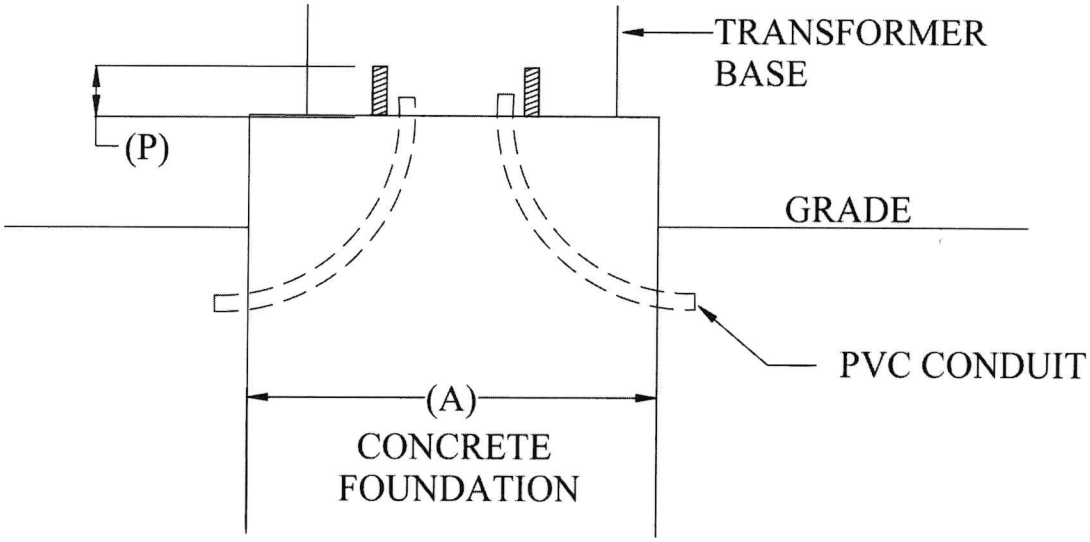

A: 36" DIAMETER FOUNDATION
B: 16" DIAMETER BOLT CIRCLE
F: 11-5/16" BOLT SQUARE
P: REFER TO MANUFACTURER'S SPEC FOR BOLT EXPOSURE

ANCHOR BASE DETAIL
36" FOUNDATION ASSEMBLY
(PILE SUPPORTED)
(N.T.S.)

11/20/19 12:36 AM

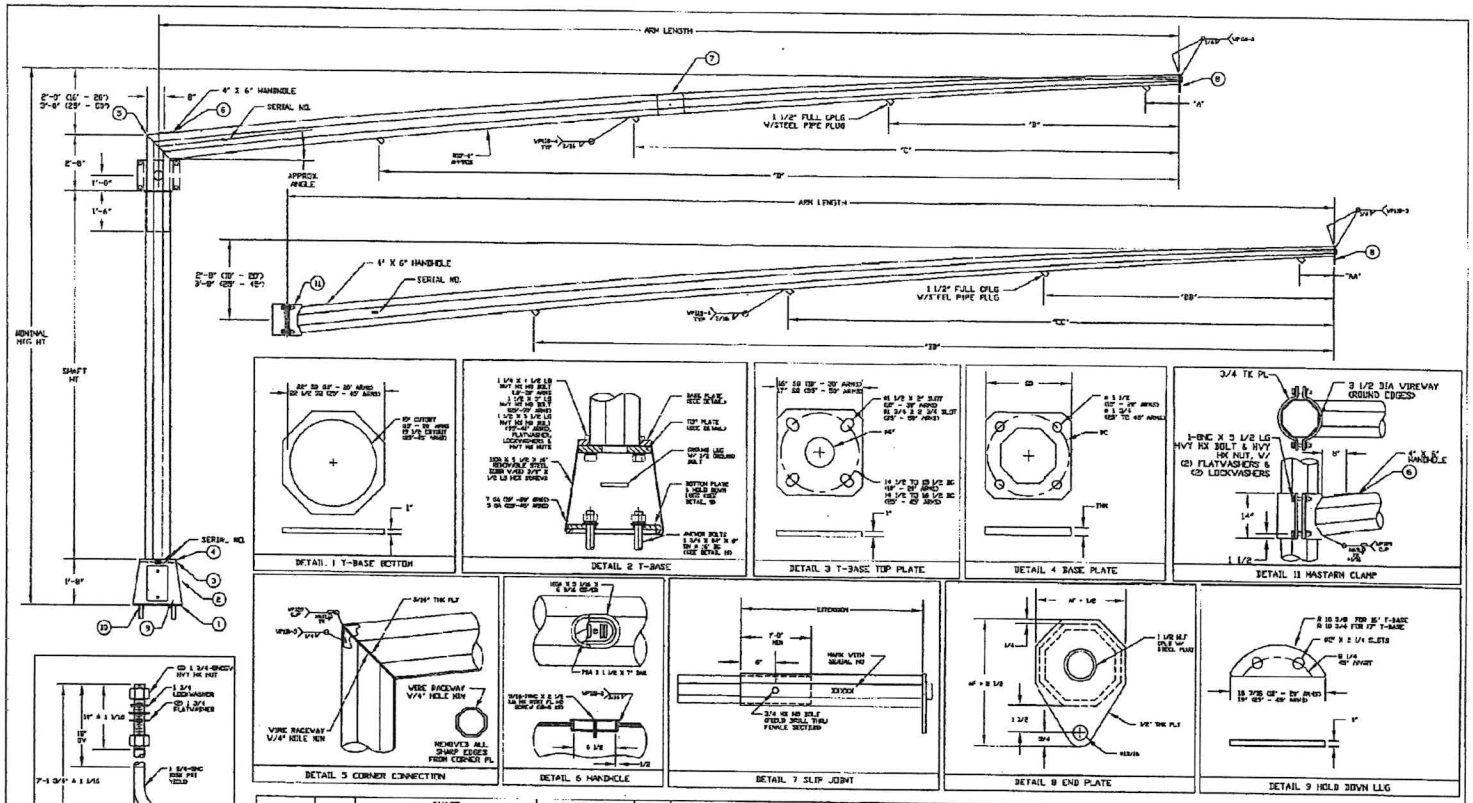

PART NO	QTY	SHAFT					BASE PLATE			INSERT	PRIMARY MASTARM					CLAMP ON MASTARM						SIGNALS				SIGNALS				MILLERBERND PART NO
		MTG HT	SHAFT HT	AF BASE	AF TOP	THK	THK	SQ	B.C.	THK	ARM LENGTH	AF BASE	AF END	THK	ANG. APPROX	ARM LENGTH	AF BASE	AF END	THK	ANG. APPROX	CLAMP SIZE	DIM "A"	DIM "B"	DIM "C"	DIM "D"	DIM "AA"	DIM "BB"	DIM "CC"	DIM "DD"	
780C725-1		20'-0"	13'-8"	8.75	8.75	7 GA	1 1/4	15"	14 1/2	10 GA	17'-0"	8.250	4.000	7 GA	21.8°	10'-0"	5.25	4.000	7 GA	28°	8"	1'-0"	---	---	---	1'-0"	---	---	---	8-S8TCTR-S10C8/S10C5-200-LA
780C725-2		20'-0"	13'-8"	8.50	8.50	7 GA	1 1/4	15"	14 1/2	10 GA	15'-0"	7.580	4.000	7 GA	15.0°	15'-0"	5.75	4.000	7 GA	19.3°	8"	1'-0"	11'-4"	---	---	1'-0"	11'-4"	---	---	8-S8STCTR-S15C7/S15C5-200-LA
780C725-3		20'-0"	13'-8"	9.25	9.25	7 GA	1 1/4	15"	14 1/2	10 GA	27'-0"	8.650	4.000	7 GA	11.5°	20'-0"	7.25	4.000	7 GA	15°	9"	1'-0"	11'-4"	---	---	1'-0"	11'-4"	---	---	8-S9TCTR-S20C8/S20C7-200-LA
780C725-4		21'-0"	13'-8"	11.50	11.50	3 GA	1 1/2	17"	15 1/2	7 GA	25'-0"	10.750	4.000	7 GA	13.5°	25'-0"	8.00	4.000	7 GA	16.3°	11"	1'-4"	11'-4"	21'-4"	---	1'-4"	11'-4"	21'-4"	---	8-B1TCTR-S25C8/S25C8-210-LA
780C725-5		21'-0"	13'-8"	12.50	12.50	3 GA	1 1/2	17"	16 1/2	7 GA	30'-0"	11.750	4.000	7 GA	11.3°	30'-0"	8.00	4.000	7 GA	13.7°	12"	1'-4"	11'-4"	21'-4"	---	1'-4"	11'-4"	21'-4"	---	8-B2TCTR-S30C1/S30C8-210-LA
780C725-6		21'-0"	13'-8"	12.50	12.50	0 GA	2"	17"	16 1/2	3 GA	35'-0"	13.750	4.000	7 GA	9.7°	35'-0"	10.50	4.000	7 GA	11.8°	12"	1'-4"	11'-4"	21'-4"	31'-4"	1'-4"	11'-4"	21'-4"	31'-4"	8 D2TCTR-S35C1/S35C8-210-LA
780C725-7		21'-0"	13'-8"	12.50	12.50	3/8	2"	17"	16 1/2	0 GA	40'-0"	13.500	4.500	3 GA	8.5°	40'-0"	10.50	4.500	3 GA	10.4°	13"	1'-4"	11'-4"	21'-4"	31'-4"	1'-4"	11'-4"	21'-4"	31'-4"	8-C2TCTR-S40D1/S40D0-210-LA
780C725-8		21'-0"	13'-8"	12.75	12.75	3/8	2"	17"	16 1/2	0 GA	45'-0"	13.750	4.000	3 GA	7.6°	45'-0"	11.50	4.000	3 GA	5.3°	12"	1'-4"	11'-4"	21'-4"	31'-4"	1'-4"	11'-4"	21'-4"	31'-4"	8-C2TCTR-S45D1/S45D1-210-LA

NOTES:

1. SHAFT MATERIAL- HIGH STRENGTH LOW ALLOY STEEL 50,000 PSI MIN YIELD PER ASTM A595-GRADA. BASE PLATES AND HANDHOLE FRAME MATERIAL 36,000 PSI MIN YIELD PER ASTM A36.
2. FINISH - HOT DIP GALVANIZED PER ASTM A123.
3. POLES ARE TAPERED TO BE ROUND TAPERED TUBE FABRICATED WITH ONE SUPPORTED AND LONGITUDINAL SEAM WELD WITH A MINIMUM OF FOUR VERTICAL PLATE STIFFENERTIAL WELD PLATE REQUIRED BY LONGITUDINAL SEAM WELD AND FABRICATION AND METHOD AND WELDING PROCESS TO BE USED FOR THE REQUIRED OF WELDED FABRICATION
4. WELD TESTING - HIGH PENETRATION WELDS ON 3/16 THICK SHAFTS ULTRASONIC TESTED BUTT AND PENETRATION WELDS ON 3/16 AND 1/4 THICK SHAFTS MAGNETIC PARTICLE TESTED BUTT, FILLET OF ALL TUBULAR STRUCTURE MAGNETIC PARTICLE TESTED (MPT) AND A SUBMERGED ARC (SAW) OR MANUAL FILLET WELDS ARE PARTIAL PENETRATION LONGITUDINAL SEAM WELDS MAGNETIC PARTICLE TESTED (MT)
5. HEAVY HEX HEAD BOLTS AND NUTS UNLESS SPECIFIED ASTM A325 ONLY A563
6. STAINLESS STEEL SCREWS, BOLTS AND NUTS PER ASTM F593C, F879, AND F594C
7. ANCHOR BOLTS PER ASTM F1554 GRADE 0 (A36)
8. ANCHOR BOLT NUTS PER ASTM A563 OR 194
9. DESIGN REQUIREMENTS OF THE LATEST EDITION OF AASHTO "STANDARD SPECIFICATION STRUCTURAL SUPPORTS FOR HIGHWAY SIGNS, LUMINAIRES AND TRAFFIC SIGNALS", FOR 90 MPH WIND.
10. ALL UNITS IN INCHES UNLESS OTHERWISE STATED

DWN: JAMIE D.
DATE: 04-26-11
CHK: FLOYD F.
SCALE: NTS

8-SIDED SIGNAL STANDARD
LA/DOT 19'-30' TWIN MASTARMS WITH 20'-21' MOUNTING HEIGHTS

Millerbernd MANUFACTURING CO. WINONA, MN

780C725

SHEET NUMBER 306

JEFFERSON

2017-029-RBP

DBC JBW | SFU DBC | NOV. 2019 | 6 OF 10

J. P. STANDARD DETAILS

INTERSECTION VETERANS BLVD.-BONNABEL BLVD.

HEI Horizons Engineering, Inc. Consulting Engineers

APP-12

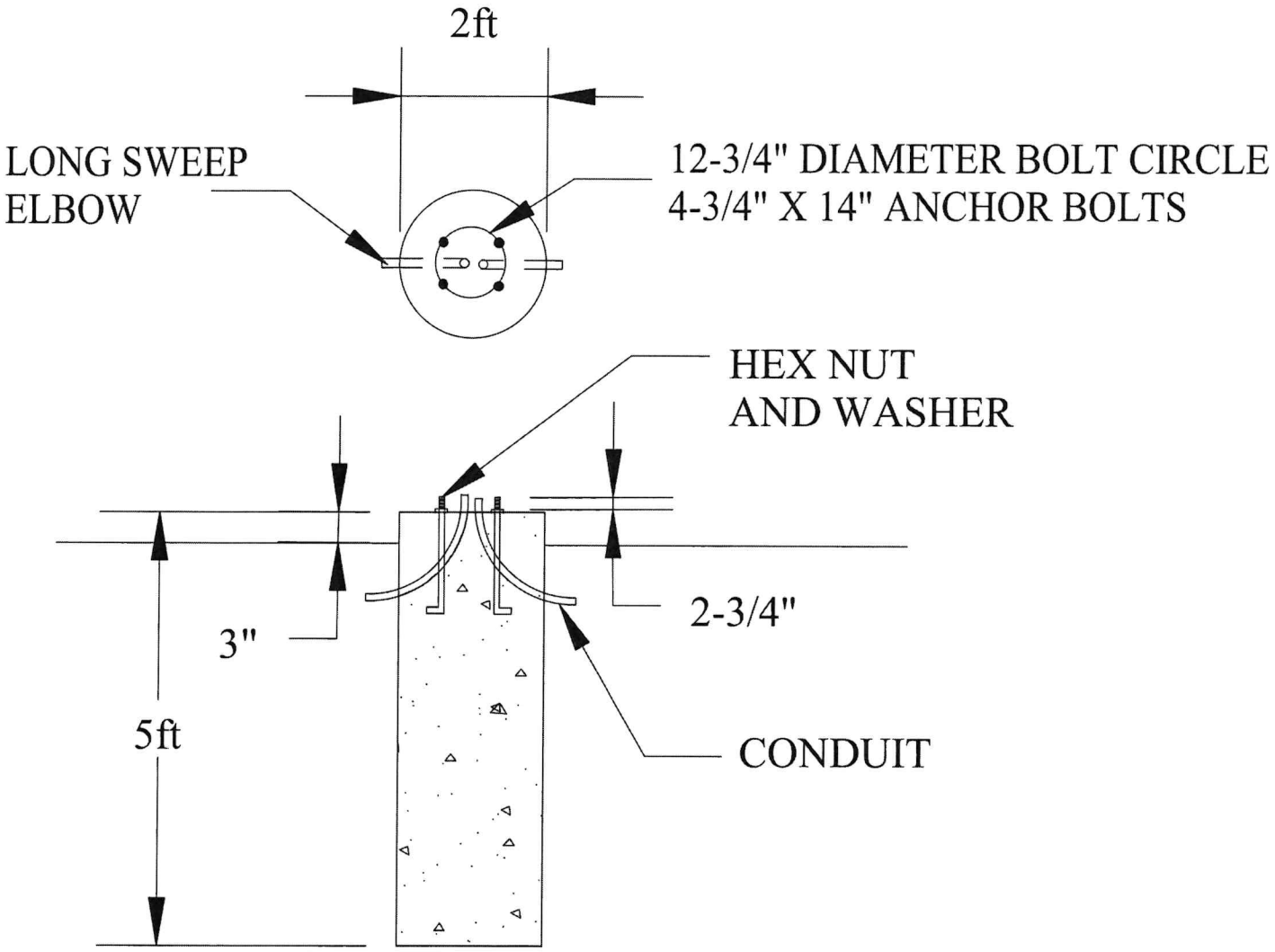

PEDESTAL FOUNDATION DETAIL
(N.T.S.)

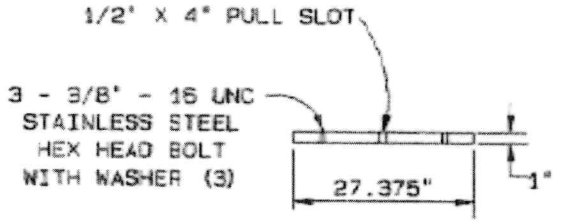

COVER SECTION

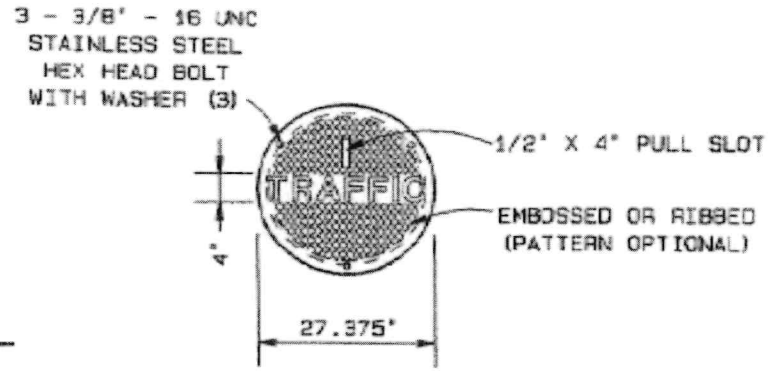

COVER

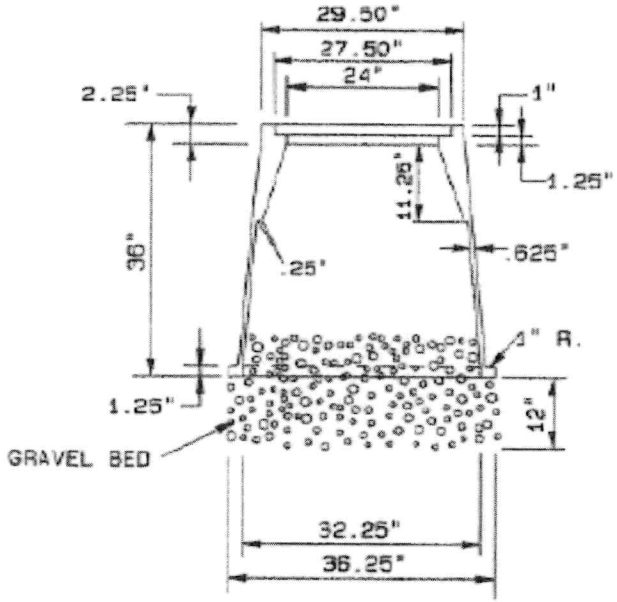

SECTION

DETAILS OF MANHOLE

(N.T.S.)

JEFFERSON PARISH
DEPARTMENT OF ENGINEERING

TRAFFFIC MANHOLE DETAIL

H.J.W.	5-30-01	-	-
-	-	-	-
-	-	-	-
M85		TRAFFIC	
ENV-09			

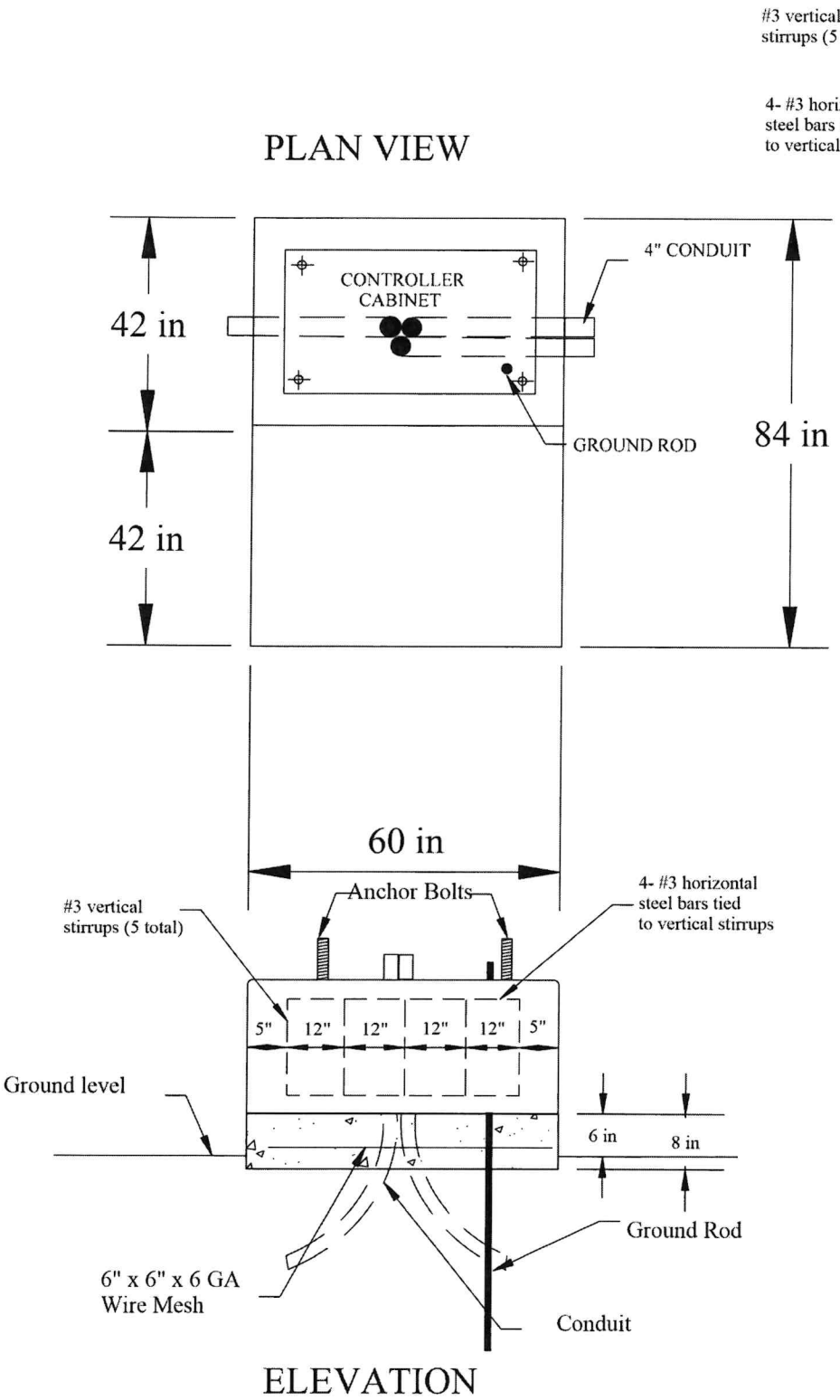

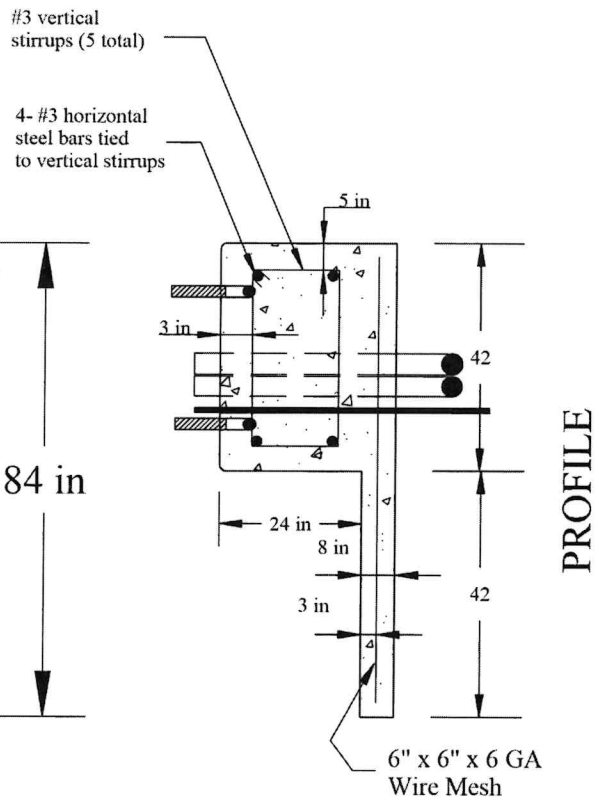

NOTES:

1. ANCHOR BOLTS TO BE LOCATED AS PER MANUFACTURER'S TEMPLATE.
2. GROUND ROD TO BE INSTALLED AS PER SPECIFICATIONS.
3. 4" PVC CONDUIT TO BE INSTALLED AS PER TRAFFIC ENGINEERING DIVISION INSTRUCTIONS.

CONTROLLER CABINET FOUNDATION

APPENDIX A: The ensuing contract for this bid solicitation may be eligible for FEMA reimbursement. As such Appendix A will be applicable accordingly and shall be considered a part of the bid documents. All applicable certifications must be duly completed, signed prior to award. (Bid # 50-00141477 Two year pre-placed contract for emergency repair and/or replacement of traffic signal systems damaged as a result of a natural disaster or other state of emergency for the west bank of Jefferson Parish.)

FEMA CONTRACT PROVISIONS FOR NON-FEDERAL ENTITY UNDER FEDERAL AWARDS REQUIRED BY 2 C.F.R. §200.326 APPENDIX II TO 2 CFR §200

REMEDIES

(For all awarded contracts with a value greater than Simplified Acquisition Threshold as defined in 2CFR200 ($250,000.00))

Any violation or breach of terms of this contract on the part of the Contractor or the Contractor's subcontractors may result in the suspension or termination of this contract or such other action that may be necessary to enforce the rights of the parties of this contract. The duties and obligations imposed by the contract documents and the rights and remedies available thereunder shall be in addition to and not a limitation of any duties, obligations, rights and remedies otherwise imposed or available by law.

Any violation or breach of terms of this contract of the Contractor or the Contractor's subcontractors will be subject to the remedies, including liquidated damages, described in the bid specifications or Request for Proposal and the Jefferson Parish General Terms and Conditions which are incorporated herein by reference in their entirety.

TERMINATION FOR CAUSE AND CONVENIENCE

(For all awarded contracts with a value greater than $10,000.00)

Jefferson Parish reserves the right to terminate this contract for cause or convenience pursuant to the General Terms and Conditions which are incorporated herein by reference in their entirety.

EQUAL EMPLOYMENT OPPORTUNITY

(For all awarded contracts that meet the definition of "federally assisted construction contract" provided in 41 CFR Part 60)

During the performance of this contract, the contractor agrees as follows:

(1) The contractor will not discriminate against any employee or applicant for employment because of race, color, religion, sex, sexual orientation, gender identity, or national origin. The contractor will take affirmative action to ensure that applicants are employed, and that employees are treated during employment without regard to their race, color, religion, sex, sexual orientation, gender identity, or national origin. Such action shall include, but not be limited to the following:

Employment, upgrading, demotion, or transfer; recruitment or recruitment advertising; layoff or termination; rates of pay or other forms of compensation; and selection for training, including apprenticeship. The contractor agrees to post in

conspicuous places, available to employees and applicants for employment, notices to be provided setting forth the provisions of this nondiscrimination clause.

(2) The contractor will, in all solicitations or advertisements for employees placed by or on behalf of the contractor, state that all qualified applicants will receive consideration for employment without regard to race, color, religion, sex, sexual orientation, gender identity, or national origin.

(3) The contractor will not discharge or in any other manner discriminate against any employee or applicant for employment because such employee or applicant has inquired about, discussed, or disclosed the compensation of the employee or applicant or another employee or applicant. This provision shall not apply to instances in which an employee who has access to the compensation information of other employees or applicants as a part of such employee's essential job functions discloses the compensation of such other employees or applicants to individuals who do not otherwise have access to such information, unless such disclosure is in response to a formal complaint or charge, in furtherance of an investigation, proceeding, hearing, or action, including an investigation conducted by the employer, or is consistent with the contractor's legal duty to furnish information.

(4) The contractor will send to each labor union or representative of workers with which he has a collective bargaining agreement or other contract or understanding, a notice to be provided advising the said labor union or workers' representatives of the contractor's commitments under this section, and shall post copies of the notice in conspicuous places available to employees and applicants for employment.

(5) The contractor will comply with all provisions of Executive Order 11246 of September 24, 1965, and of the rules, regulations, and relevant orders of the Secretary of Labor.

(6) The contractor will furnish all information and reports required by Executive Order 11246 of September 24, 1965, and by rules, regulations, and orders of the Secretary of Labor, or pursuant thereto, and will permit access to his books, records, and accounts by the administering agency and the Secretary of Labor for purposes of investigation to ascertain compliance with such rules, regulations, and orders.

(7) In the event of the contractor's noncompliance with the nondiscrimination clauses of this contract or with any of the said rules, regulations, or orders, this contract may be canceled, terminated, or suspended in whole or in part and the contractor may be declared ineligible for further Government contracts or federally assisted construction contracts in accordance with procedures authorized in Executive Order 11246 of September 24, 1965, and such other sanctions may be imposed and remedies invoked as provided in Executive Order 11246 of September 24, 1965, or by rule, regulation, or order of the Secretary of Labor, or as otherwise provided by law.

(8) The contractor will include the portion of the sentence immediately preceding paragraph (1) and the provisions of paragraphs (1) through (8) in every subcontract or purchase order unless exempted by rules, regulations, or orders of the Secretary of Labor issued pursuant to section 204 of Executive Order 11246 of September 24, 1965, so that such provisions will be binding upon each subcontractor or vendor. The contractor will take such action with respect to any subcontract or purchase order as the administering agency may direct as a means of enforcing such provisions, including sanctions for noncompliance:

Provided, however, that in the event a contractor becomes involved in, or is threatened with, litigation with a subcontractor or vendor as a result of such direction by the administering agency, the contractor may request the United States to enter into such litigation to protect the interests of the United States.

The applicant further agrees that it will be bound by the above equal opportunity clause with respect to its own employment practices when it participates in federally assisted construction work: *Provided,* that if the applicant so participating is a state or local government, the above equal opportunity clause is not applicable to any agency, instrumentality or subdivision of such government which does not participate in work on or under the contract.

The applicant agrees that it will assist and cooperate actively with the administering agency and the Secretary of Labor in obtaining the compliance of contractors and subcontractors with the equal opportunity clause and the rules, regulations, and relevant orders of the Secretary of Labor, that it will furnish the administering agency and the Secretary of Labor such information as they may require for the supervision of such compliance, and that it will otherwise assist the administering agency in the discharge of the agency's primary responsibility for securing compliance.

The applicant further agrees that it will refrain from entering into any contract or contract modification subject to Executive Order 11246 of September 24, 1965, with a contractor debarred from, or who has not demonstrated eligibility for, Government contracts and federally assisted construction contracts pursuant to the Executive Order and will carry out such sanctions and penalties for violation of the equal opportunity clause as may be imposed upon contractors and subcontractors by the administering agency or the Secretary of Labor pursuant to Part II, Subpart D of the Executive Order. In addition, the applicant agrees that if it fails or refuses to comply with these undertakings, the administering agency may take any or all of the following actions: Cancel, terminate, or suspend in whole or in part this grant (contract, loan, insurance, guarantee); refrain from extending any further assistance to the applicant under the program with respect to which the

failure or refund occurred until satisfactory assurance of future compliance has been received from such applicant; and refer the case to the Department of Justice for appropriate legal proceedings.

DAVIS-BACON ACT

(The Davis-Bacon Act only applies to the emergency Management Preparedness Grant Program, Homeland Security Grant Program, Nonprofit Security Grant Program, Tribal Homeland Security Grant Program, Port Security Grant Program, and Transit Security Grant Program for all awarded construction contracts with a value greater than $2,000.00. **It does not apply to other FEMA grant and cooperative agreement programs, including the Public Assistance Program.**)

The Agency head shall cause or require the contracting officer to insert in full in any contract in excess of $2,000 which is entered into for the actual construction, alteration and/or repair, including painting and decorating, of a public building or public work, or building or work financed in whole or in part from Federal funds or in accordance with guarantees of a Federal agency or financed from funds obtained by pledge of any contract of a Federal agency to make a loan, grant or annual contribution (except where a different meaning is expressly indicated), and which is subject to the labor standards provisions of any of the acts listed in § 5.1, the following clauses (or any modifications thereof to meet the particular needs of the agency, Provided, That such modifications are first approved by the Department of Labor):

(1) *Minimum wages.*

(i) All laborers and mechanics employed or working upon the site of the work (or under the United States Housing Act of 1937 or under the Housing Act of 1949 in the construction or development of the project), will be paid unconditionally and not less often than once a week, and without subsequent deduction or rebate on any account (except such payroll deductions as are permitted by regulations issued by the Secretary of Labor under the Copeland Act (29 CFR part 3)), the full amount of wages and bona fide fringe benefits (or cash equivalents thereof) due at time of payment computed at rates not less than those contained in the wage determination of the Secretary of Labor which is attached hereto and made a part hereof, regardless of any contractual relationship which may be alleged to exist between the contractor and such laborers and mechanics. Contributions made or costs reasonably anticipated for bona fide fringe benefits under section 1(b)(2) of the Davis-Bacon Act on behalf of laborers or mechanics are considered wages paid to such laborers or mechanics, subject to the provisions of paragraph (a)(1)(iv) of this section; also, regular contributions made or costs incurred for more than a weekly period (but not less often than quarterly) under plans, funds, or programs which cover the particular weekly period, are deemed to be constructively made or incurred during such weekly period. Such laborers and mechanics shall be paid the appropriate wage rate and fringe benefits on the wage determination for the classification of work actually performed, without regard to skill, except as provided in § 5.5(a)(4). Laborers or mechanics performing work in more than one classification may be compensated at the rate specified for each classification for the time actually worked therein: Provided, That the employer's payroll records accurately set

forth the time spent in each classification in which work is performed. The wage determination (including any additional classification and wage rates conformed under paragraph (a)(1)(ii) of this section) and the Davis-Bacon poster (WH-1321) shall be posted at all times by the contractor and its subcontractors at the site of the work in a prominent and accessible place where it can be easily seen by the workers.

(ii)

(A) The contracting officer shall require that any class of laborers or mechanics, including helpers, which is not listed in the wage determination and which is to be employed under the contract shall be classified in conformance with the wage determination. The contracting officer shall approve an additional classification and wage rate and fringe benefits therefore only when the following criteria have been met:

(1) The work to be performed by the classification requested is not performed by a classification in the wage determination; and

(2) The classification is utilized in the area by the construction industry; and

(3) The proposed wage rate, including any bona fide fringe benefits, bears a reasonable relationship to the wage rates contained in the wage determination.

(B) If the contractor and the laborers and mechanics to be employed in the classification (if known), or their representatives, and the contracting officer agree on the classification and wage rate (including the amount designated for fringe benefits where appropriate), a report of the action taken shall be sent by the contracting officer to the Administrator of the Wage and Hour Division, U.S. Department of Labor, Washington, DC 20210. The Administrator, or an authorized representative, will approve, modify, or disapprove every additional classification action within 30 days of receipt and so advise the contracting officer or will notify the contracting officer within the 30-day period that additional time is necessary.

(C) In the event the contractor, the laborers or mechanics to be employed in the classification or their representatives, and the contracting officer do not agree on the proposed classification and wage rate (including the amount designated for fringe benefits, where appropriate), the contracting officer shall refer the questions, including the views of all interested parties and the recommendation of the contracting officer, to the Administrator for determination. The Administrator, or an authorized representative, will issue a determination within 30 days of receipt and so advise the contracting officer or will notify the contracting officer within the 30-day period that additional time is necessary.

(D) The wage rate (including fringe benefits where appropriate) determined pursuant to paragraphs (a)(1)(ii) (B) or (C) of this section, shall be paid to all workers performing work

in the classification under this contract from the first day on which work is performed in the classification.

(iii) Whenever the minimum wage rate prescribed in the contract for a class of laborers or mechanics includes a fringe benefit which is not expressed as an hourly rate, the contractor shall either pay the benefit as stated in the wage determination or shall pay another bona fide fringe benefit or an hourly cash equivalent thereof.

(iv) If the contractor does not make payments to a trustee or other third person, the contractor may consider as part of the wages of any laborer or mechanic the amount of any costs reasonably anticipated in providing bona fide fringe benefits under a plan or program, Provided, That the Secretary of Labor has found, upon the written request of the contractor, that the applicable standards of the Davis-Bacon Act have been met. The Secretary of Labor may require the contractor to set aside in a separate account asset for the meeting of obligations under the plan or program.

(2) Withholding. The (write in name of Federal Agency or the loan or grant recipient) shall upon its own action or upon written request of an authorized representative of the Department of Labor withhold or cause to be withheld from the contractor under this contract or any other Federal contract with the same prime contractor, or any other federally-assisted contract subject to Davis-Bacon prevailing wage requirements, which is held by the same prime contractor, so much of the accrued payments or advances as may be considered necessary to pay laborers and mechanics, including apprentices, trainees, and helpers, employed by the contractor or any subcontractor the full amount of wages required by the contract. In the event of failure to pay any laborer or mechanic, including any apprentice, trainee, or helper, employed or working on the site of the work (or under the United States Housing Act of 1937 or under the Housing Act of 1949 in the construction or development of the project), all or part of the wages required by the contract, the (Agency) may, after written notice to the contractor, sponsor, applicant, or owner, take such action as may be necessary to cause the suspension of any further payment, advance, or guarantee of funds until such violations have ceased.

(3) Payrolls and basic records.

(i) Payrolls and basic records relating thereto shall be maintained by the contractor during the course of the work and preserved for a period of three years thereafter for all laborers and mechanics working at the site of the work (or under the United States Housing Act of 1937, or under the Housing Act of 1949, in the construction or development of the project). Such records shall contain the name, address, and social security number of each such worker, his or her correct classification, hourly rates of wages paid (including rates of contributions or costs anticipated for bona fide fringe benefits or cash equivalents thereof of the types described in section 1(b)(2)(B) of the Davis-Bacon Act), daily and weekly number of hours worked, deductions made and actual wages paid. Whenever the Secretary

of Labor has found under 29 CFR 5.5(a)(1)(iv) that the wages of any laborer or mechanic include the amount of any costs reasonably anticipated in providing benefits under a plan or program described in section 1(b)(2)(B) of the Davis-Bacon Act, the contractor shall maintain records which show that the commitment to provide such benefits is enforceable, that the plan or program is financially responsible, and that the plan or program has been communicated in writing to the laborers or mechanics affected, and records which show the costs anticipated or the actual cost incurred in providing such benefits. Contractors employing apprentices or trainees under approved programs shall maintain written evidence of the registration of apprenticeship programs and certification of trainee programs, the registration of the apprentices and trainees, and the ratios and wage rates prescribed in the applicable programs.

(ii)

(A) The contractor shall submit weekly for each week in which any contract work is performed a copy of all payrolls to the (write in name of appropriate federal agency) if the agency is a party to the contract, but if the agency is not such a party, the contractor will submit the payrolls to the applicant, sponsor, or owner, as the case may be, for transmission to the (write in name of agency). The payrolls submitted shall set out accurately and completely all of the information required to be maintained under 29 CFR 5.5(a)(3)(i), except that full social security numbers and home addresses shall not be included on weekly transmittals. Instead the payrolls shall only need to include an individually identifying number for each employee (e.g., the last four digits of the employee's social security number). The required weekly payroll information may be submitted in any form desired. Optional Form WH-347 is available for this purpose from the Wage and Hour Division Web site at http://www.dol.gov/esa/whd/forms/wh347instr.htm or its successor site. The prime contractor is responsible for the submission of copies of payrolls by all subcontractors. Contractors and subcontractors shall maintain the full social security number and current address of each covered worker, and shall provide them upon request to the (write in name of appropriate federal agency) if the agency is a party to the contract, but if the agency is not such a party, the contractor will submit them to the applicant, sponsor, or owner, as the case may be, for transmission to the (write in name of agency), the contractor, or the Wage and Hour Division of the Department of Labor for purposes of an investigation or audit of compliance with prevailing wage requirements. It is not a violation of this section for a prime contractor to require a subcontractor to provide addresses and social security numbers to the prime contractor for its own records, without weekly submission to the sponsoring government agency (or the applicant, sponsor, or owner).

(B) Each payroll submitted shall be accompanied by a "Statement of Compliance," signed by the contractor or subcontractor or his or her agent who pays or supervises the payment of the persons employed under the contract and shall certify the following:

(1) That the payroll for the payroll period contains the information required to be provided under § 5.5 (a)(3)(ii) of Regulations, 29 CFR part 5, the appropriate information is being maintained under § 5.5 (a)(3)(i) of Regulations, 29 CFR part 5, and that such information is correct and complete;

(2) That each laborer or mechanic (including each helper, apprentice, and trainee) employed on the contract during the payroll period has been paid the full weekly wages earned, without rebate, either directly or indirectly, and that no deductions have been made either directly or indirectly from the full wages earned, other than permissible deductions as set forth in Regulations, 29 CFR part 3;

(3) That each laborer or mechanic has been paid not less than the applicable wage rates and fringe benefits or cash equivalents for the classification of work performed, as specified in the applicable wage determination incorporated into the contract.

(C) The weekly submission of a properly executed certification set forth on the reverse side of Optional Form WH-347 shall satisfy the requirement for submission of the "Statement of Compliance" required by paragraph (a)(3)(ii)(B) of this section.

(D) The falsification of any of the above certifications may subject the contractor or subcontractor to civil or criminal prosecution under section 1001 of title 18 and section 231 of title 31 of the United States Code.

(iii) The contractor or subcontractor shall make the records required under paragraph (a)(3)(i) of this section available for inspection, copying, or transcription by authorized representatives of the (write the name of the agency) or the Department of Labor, and shall permit such representatives to interview employees during working hours on the job. If the contractor or subcontractor fails to submit the required records or to make them available, the Federal agency may, after written notice to the contractor, sponsor, applicant, or owner, take such action as may be necessary to cause the suspension of any further payment, advance, or guarantee of funds. Furthermore, failure to submit the required records upon request or to make such records available may be grounds for debarment action pursuant to 29 CFR 5.12.

(4) Apprentices and trainees -

(i) Apprentices. Apprentices will be permitted to work at less than the predetermined rate for the work they performed when they are employed pursuant to and individually registered in a bona fide apprenticeship program registered with the U.S. Department of Labor, Employment and Training Administration, Office of Apprenticeship Training, Employer and Labor Services, or with a State Apprenticeship Agency recognized by the Office, or if a person is employed in his or her first 90 days of probationary employment as an apprentice in such an apprenticeship program, who is not individually registered in

the program, but who has been certified by the Office of Apprenticeship Training, Employer and Labor Services or a State Apprenticeship Agency (where appropriate) to be eligible for probationary employment as an apprentice. The allowable ratio of apprentices to journeymen on the job site in any craft classification shall not be greater than the ratio permitted to the contractor as to the entire work force under the registered program. Any worker listed on a payroll at an apprentice wage rate, who is not registered or otherwise employed as stated above, shall be paid not less than the applicable wage rate on the wage determination for the classification of work actually performed. In addition, any apprentice performing work on the job site in excess of the ratio permitted under the registered program shall be paid not less than the applicable wage rate on the wage determination for the work actually performed. Where a contractor is performing construction on a project in a locality other than that in which its program is registered, the ratios and wage rates (expressed in percentages of the journeyman's hourly rate) specified in the contractor's or subcontractor's registered program shall be observed. Every apprentice must be paid at not less than the rate specified in the registered program for the apprentice's level of progress, expressed as a percentage of the journeymen hourly rate specified in the applicable wage determination. Apprentices shall be paid fringe benefits in accordance with the provisions of the apprenticeship program. If the apprenticeship program does not specify fringe benefits, apprentices must be paid the full amount of fringe benefits listed on the wage determination for the applicable classification. If the Administrator determines that a different practice prevails for the applicable apprentice classification, fringes shall be paid in accordance with that determination. In the event the Office of Apprenticeship Training, Employer and Labor Services, or a State Apprenticeship Agency recognized by the Office, withdraws approval of an apprenticeship program, the contractor will no longer be permitted to utilize apprentices at less than the applicable predetermined rate for the work performed until an acceptable program is approved.

(ii) Trainees. Except as provided in 29 CFR 5.16, trainees will not be permitted to work at less than the predetermined rate for the work performed unless they are employed pursuant to and individually registered in a program which has received prior approval, evidenced by formal certification by the U.S. Department of Labor, Employment and Training Administration. The ratio of trainees to journeymen on the job site shall not be greater than permitted under the plan approved by the Employment and Training Administration. Every trainee must be paid at not less than the rate specified in the approved program for the trainee's level of progress, expressed as a percentage of the journeyman hourly rate specified in the applicable wage determination. Trainees shall be paid fringe benefits in accordance with the provisions of the trainee program. If the trainee program does not mention fringe benefits, trainees shall be paid the full amount of fringe benefits listed on the wage determination unless the Administrator of the Wage and Hour Division determines that there is an apprenticeship program associated with the corresponding journeyman wage rate on the wage determination which provides for less than full fringe benefits for apprentices. Any employee listed on the payroll at a trainee rate who is not registered and participating in a training plan approved by the Employment and Training

Administration shall be paid not less than the applicable wage rate on the wage determination for the classification of work actually performed. In addition, any trainee performing work on the job site in excess of the ratio permitted under the registered program shall be paid not less than the applicable wage rate on the wage determination for the work actually performed. In the event the Employment and Training Administration withdraws approval of a training program, the contractor will no longer be permitted to utilize trainees at less than the applicable predetermined rate for the work performed until an acceptable program is approved.

(iii) Equal employment opportunity. The utilization of apprentices, trainees and journeymen under this part shall be in conformity with the equal employment opportunity requirements of Executive Order 11246, as amended, and 29 CFR part 30.

(5) Compliance with Copeland Act requirements. The contractor shall comply with the requirements of 29 CFR part 3, which are incorporated by reference in this contract.

(6) Subcontracts. The contractor or subcontractor shall insert in any subcontracts the clauses contained in 29 CFR 5.5(a)(1) through (10) and such other clauses as the (write in the name of the Federal agency) may by appropriate instructions require, and also a clause requiring the subcontractors to include these clauses in any lower tier subcontracts. The prime contractor shall be responsible for the compliance by any subcontractor or lower tier subcontractor with all the contract clauses in 29 CFR 5.5.

(7) Contract termination: debarment. A breach of the contract clauses in 29 CFR 5.5 may be grounds for termination of the contract, and for debarment as a contractor and a subcontractor as provided in 29 CFR 5.12.

(8) Compliance with Davis-Bacon and Related Act requirements. All rulings and interpretations of the Davis-Bacon and Related Acts contained in 29 CFR parts 1, 3, and 5 are herein incorporated by reference in this contract.

(9) Disputes concerning labor standards. Disputes arising out of the labor standards provisions of this contract shall not be subject to the general disputes clause of this contract. Such disputes shall be resolved in accordance with the procedures of the Department of Labor set forth in 29 CFR parts 5, 6, and 7. Disputes within the meaning of this clause include disputes between the contractor (or any of its subcontractors) and the contracting agency, the U.S. Department of Labor, or the employees or their representatives.

(10) Certification of eligibility.

(i) By entering into this contract, the contractor certifies that neither it (nor he or she) nor any person or firm who has an interest in the contractor's firm is a person or firm ineligible

to be awarded Government contracts by virtue of section 3(a) of the Davis-Bacon Act or 29 CFR 5.12(a)(1).

(ii) No part of this contract shall be subcontracted to any person or firm ineligible for award of a Government contract by virtue of section 3(a) of the Davis-Bacon Act or 29 CFR 5.12(a)(1).

(iii) The penalty for making false statements is prescribed in the U.S. Criminal Code, 18 U.S.C. 1001.

(b) Contract Work Hours and Safety Standards Act. The Agency Head shall cause or require the contracting officer to insert the following clauses set forth in paragraphs (b)(1), (2), (3), and (4) of this section in full in any contract in an amount in excess of $100,000 and subject to the overtime provisions of the Contract Work Hours and Safety Standards Act. These clauses shall be inserted in addition to the clauses required by § 5.5(a) or § 4.6 of part 4 of this title. As used in this paragraph, the terms laborers and mechanics include watchmen and guards.

(1) Overtime requirements. No contractor or subcontractor contracting for any part of the contract work which may require or involve the employment of laborers or mechanics shall require or permit any such laborer or mechanic in any workweek in which he or she is employed on such work to work in excess of forty hours in such workweek unless such laborer or mechanic receives compensation at a rate not less than one and one-half times the basic rate of pay for all hours worked in excess of forty hours in such workweek.

(2) Violation; liability for unpaid wages; liquidated damages. In the event of any violation of the clause set forth in paragraph (b)(1) of this section the contractor and any subcontractor responsible therefor shall be liable for the unpaid wages. In addition, such contractor and subcontractor shall be liable to the United States (in the case of work done under contract for the District of Columbia or a territory, to such District or to such territory), for liquidated damages. Such liquidated damages shall be computed with respect to each individual laborer or mechanic, including watchmen and guards, employed in violation of the clause set forth in paragraph (b)(1) of this section, in the sum of $29 for each calendar day on which such individual was required or permitted to work in excess of the standard workweek of forty hours without payment of the overtime wages required by the clause set forth in paragraph (b)(1) of this section.

(3) Withholding for unpaid wages and liquidated damages. The (write in the name of the Federal agency or the loan or grant recipient) shall upon its own action or upon written request of an authorized representative of the Department of Labor withhold or cause to be withheld, from any moneys payable on account of work performed by the contractor or subcontractor under any such contract or any other Federal contract with the same prime contractor, or any other federally-assisted contract subject to the Contract Work Hours and

Safety Standards Act, which is held by the same prime contractor, such sums as may be determined to be necessary to satisfy any liabilities of such contractor or subcontractor for unpaid wages and liquidated damages as provided in the clause set forth in paragraph (b)(2) of this section.

(4) Subcontracts. The contractor or subcontractor shall insert in any subcontracts the clauses set forth in paragraph (b)(1) through (4) of this section and also a clause requiring the subcontractors to include these clauses in any lower tier subcontracts. The prime contractor shall be responsible for compliance by any subcontractor or lower tier subcontractor with the clauses set forth in paragraphs (b)(1) through (4) of this section.

(c) In addition to the clauses contained in paragraph (b), in any contract subject only to the Contract Work Hours and Safety Standards Act and not to any of the other statutes cited in § 5.1, the Agency Head shall cause or require the contracting officer to insert a clause requiring that the contractor or subcontractor shall maintain payrolls and basic payroll records during the course of the work and shall preserve them for a period of three years from the completion of the contract for all laborers and mechanics, including guards and watchmen, working on the contract. Such records shall contain the name and address of each such employee, social security number, correct classifications, hourly rates of wages paid, daily and weekly number of hours worked, deductions made, and actual wages paid. Further, the Agency Head shall cause or require the contracting officer to insert in any such contract a clause providing that the records to be maintained under this paragraph shall be made available by the contractor or subcontractor for inspection, copying, or transcription by authorized representatives of the (write the name of agency) and the Department of Labor, and the contractor or subcontractor will permit such representatives to interview employees during working hours on the job.

COPELAND "ANTI-KICKBACK" ACT

(For all prime construction contracts above $2,000, when the Davis-Bacon Act also applies,26 NFEs must include a provision in contracts and subcontracts for compliance with the Copeland "Anti-Kickback" Act.27 This requirement applies to all prime construction contracts above $2,000 in situations where the Davis-Bacon Act also applies.28 In situations where the Davis-Bacon Act does not apply, neither does the Copeland "Anti-Kickback" Act. As described in section A.4 regarding the Davis-Bacon Act, this provision only applies to certain FEMA grant and cooperative agreement programs. Please reference that list discussed above. Of note, it does not apply to the PA Program.)

Compliance with the Copeland "Anti-Kickback" Act.
Contractor. The contractor shall comply with 18 U.S.C. § 874, 40 U.S.C. § 3145, and the requirements of 29 C.F.R. Part 3 as may be applicable, which are incorporated by reference into this contract.

APPENDIX A: The ensuing contract for this bid solicitation may be eligible for FEMA reimbursement. As such Appendix A will be applicable accordingly and shall be considered a part of the bid documents. All applicable certifications must be duly completed, signed prior to award. (Bid # 50-00141477 Two year pre-placed contract for emergency repair and/or replacement of traffic signal systems damaged as a result of a natural disaster or other state of emergency for the west bank of Jefferson Parish.)

Subcontracts. The contractor or subcontractor shall insert in any subcontracts the clause above and such other clauses as FEMA may by appropriate instructions require, and also a clause requiring the subcontractors to include these clauses in any lower tier subcontracts. The prime contractor shall be responsible for the compliance by any subcontractor or lower tier subcontractor with all of these contract clauses.

Breach. A breach of the contract clauses above may be grounds for termination of the contract, and for debarment as a contractor and subcontractor as provided in 29 C.F.R. § 5.12.

CONTRACT WORK HOURS AND SAFETY STANDARDS ACT

(This required contract provision applies to all procurements over $100,000 that involve the employment of mechanics, laborers, and construction work.[36] These requirements *do not* apply to the purchase of supplies or materials or articles ordinarily available on the open market, or contracts for transportation or transmission of intelligence.)

Compliance with the Contract Work Hours and Safety Standards Act.

(1) Overtime requirements. No contractor or subcontractor contracting for any part of the contract work which may require or involve the employment of laborers or mechanics shall require or permit any such laborer or mechanic in any workweek in which he or she is employed on such work to work in excess of 40 hours in such workweek unless such laborer or mechanic receives compensation at a rate not less than one and one-half times the basic rate of pay for all hours worked in excess of 40 hours in such workweek.

(2) Violation; liability for unpaid wages; liquidated damages. In the event of any violation of the clause set forth in paragraph (b)(1) of this section, the contractor and any subcontractor responsible therefor shall be liable for the unpaid wages. In addition, such contractor and subcontractor shall be liable to the United States (in the case of work done under contract for the District of Columbia or a territory, to such District or to such territory), for liquidated damages. Such liquidated damages shall be computed with respect to each individual laborer or mechanic, including watchmen and guards, employed in violation of the clause set forth in paragraph (b)(1) of this paragraph, in the sum of $27 for each calendar day on which such individual was required or permitted to work in excess of the standard workweek of forty (40) hours without payment of the overtime wages required by the clause set forth in paragraph (b)(1) of this section.

(3) Withholding for unpaid wages and liquidated damages. The federal agency and/or Jefferson Parish shall upon its own action or upon written request of an authorized representative of the Department of Labor withhold or cause to be withheld, from any moneys payable on account of work performed by the contractor or subcontractor under any such contract or any other Federal contract with the same prime contract, or any other Federally-assisted contract subject to the Contract Work Hours and Safety Standards Act, which is held by the same prime contractor, such sums as may be determined to be necessary to satisfy any liabilities of such contractor or

subcontractor for unpaid wages and liquidated damages as provided in the clause set forth in paragraph (b)(2) of this section.

(4) Subcontracts. The contractor or subcontractor shall insert in any subcontracts the clauses set forth in subparagraph (b)(1) through (4) of this section and also a clause requiring the subcontractors to include these clauses in any lower tier subcontracts. The prime contractor shall be responsible for compliance by any subcontractor or lower tier subcontractor with the clauses set forth in paragraphs (b)(1) through (4) of this section.

Further Compliance with the Contract Work Hours and Safety Standards Act.

(1) The contractor or subcontractor shall maintain payrolls and basic payroll records during the course of the work and shall preserve them for a period of three years from the completion of the contract for all laborers and mechanics, including guards and watchmen, working on the contract. Such records shall contain the name and address of each such employee, social security number, correct classifications, hourly rates of wages paid, daily and weekly number of hours worked, deductions made, and actual wages paid.

(2) Records to be maintained under this provision shall be made available by the contractor or subcontractor for inspection, copying, or transcription by authorized representatives of the Department of Homeland Security, the Federal Emergency Management Agency, and the Department of Labor, and the contractor or subcontractor will permit such representatives to interview employees during working hours on the job."

RIGHTS TO INVENTIONS MADE UNDER A CONTRACT OR AGREEMENT

(This requirement **does not apply** to the Public Assistance, Hazard Mitigation Grant Program, Fire Management Assistance Grant Program, Crisis Counseling Assistance and Training Grant Program, Disaster Case Management Grant Program, and Federal Assistance to Individuals and Households -Other Needs Assistance Grant Program, as FEMA awards under these programs do not meet the definition of "funding agreement." If FEMA federal award meets definition of "funding agreement" under 37 CFR §401.2(a), for all awarded contracts related to experimental, developmental, or research work type contracts)

(a) Definitions

(1) *Invention* means any invention or discovery which is or may be patentable or otherwise protectable under Title 35 of the United States Code, or any novel variety of plant which is or may be protected under the Plant Variety Protection Act (7 U.S.C. 2321 *et seq.*).

(2) *Subject invention* means any invention of the *contractor* conceived or first actually reduced to practice in the performance of work under this *contract,* provided that in the case of a variety of plant, the date of determination (as defined in section 41(d) of the Plant Variety Protection Act, 7 U.S.C. 2401(d)) must also occur during the period of *contract* performance.

(3) *Practical Application* means to manufacture in the case of a composition or product, to practice in the case of a process or method, or to operate in the case of a machine or system; and, in each case, under such conditions as to establish that the invention is being utilized and that its benefits are, to the extent permitted by law or government regulations, available to the public on reasonable terms.

(4) *Made* when used in relation to any invention means the conception or first actual reduction to practice of such invention.

(5) *Small Business Firm* means a small business concern as defined at section 2 of Pub. L. 85-536 (15 U.S.C. 632) and implementing regulations of the Administrator of the Small Business Administration. For the purpose of this clause, the size standards for small business concerns involved in government procurement and subcontracting at 13 CFR 121.3-8 and 13 CFR 121.3-12, respectively, will be used.

(6) *Nonprofit Organization* means a university or other institution of higher education or an organization of the type described in section 501(c)(3) of the Internal Revenue Code of 1954 (26 U.S.C. 501(c) and exempt from taxation under section 501(a) of the Internal Revenue Code (25 U.S.C. 501(a)) or any nonprofit scientific or educational organization qualified under a state nonprofit organization statute.

(b) Allocation of Principal Rights

The *Contractor* may retain the entire right, title, and interest throughout the world to each subject invention subject to the provisions of this clause and 35 U.S.C. 203. With respect to any subject invention in which the *Contractor* retains title, the Federal government shall have a nonexclusive, nontransferable, irrevocable, paid-up license to practice or have practiced for or on behalf of the United States the subject invention throughout the world.

(c) Invention Disclosure, Election of Title and Filing of Patent Application by *Contractor*

(1) The *contractor* will disclose each subject invention to the *Federal Agency* within two months after the inventor discloses it in writing to *contractor* personnel responsible for patent matters. The disclosure to the agency shall be in the form of a written report and shall identify the *contract* under which the invention was made and the inventor(s). It shall be sufficiently complete in technical detail to convey a clear understanding to the extent known at the time of the disclosure, of the nature, purpose, operation, and the physical, chemical, biological or electrical characteristics of the invention. The disclosure shall also identify any publication, on sale or public use of the invention and whether a manuscript describing the invention has been submitted for publication and, if so, whether it has been accepted for publication at the time of disclosure. In addition, after disclosure to the *agency,* the *Contractor* will promptly notify the *agency* of the acceptance of any manuscript describing the invention for publication or of any on sale or public use planned by the *contractor.*

(2) The *Contractor* will elect in writing whether or not to retain title to any such invention by notifying the *Federal agency* within two years of disclosure to the *Federal agency.* However, in any case where publication, on sale or public use has initiated the one year statutory period wherein valid patent protection can still be obtained in the United States, the period for election of title may be shortened by the *agency* to a date that is no more than 60 days prior to the end of the statutory period.

(3) The *contractor* will file its initial patent application on a subject invention to which it elects to retain title within one year after election of title or, if earlier, prior to the end of any statutory period wherein valid patent protection can be obtained in the United States after a publication, on sale, or public use. The *contractor* will file patent applications in additional countries or international patent offices within either ten months of the corresponding initial patent application or six months from the date permission is granted by the Commissioner of Patents and Trademarks to file foreign patent applications where such filing has been prohibited by a Secrecy Order.

(4) Requests for extension of the time for disclosure, election, and filing under subparagraphs (1), (2), and (3) may, at the discretion of the *agency,* be granted.

(d) Conditions When the Government May Obtain Title

The *contractor* will convey to the *Federal agency,* upon written request, title to any subject invention—

(1) If the *contractor* fails to disclose or elect title to the subject invention within the times specified in (c), above, or elects not to retain title; provided that the *agency* may only request title within 60 days after learning of the failure of the *contractor* to disclose or elect within the specified times.

(2) In those countries in which the *contractor* fails to file patent applications within the times specified in (c) above; provided, however, that if the *contractor* has filed a patent application in a country after the times specified in (c) above, but prior to its receipt of the written request of the *Federal agency,* the *contractor* shall continue to retain title in that country.

(3) In any country in which the *contractor* decides not to continue the prosecution of any application for, to pay the maintenance fees on, or defend in reexamination or opposition proceeding on, a patent on a subject invention.

(e) Minimum Rights to *Contractor* and Protection of the *Contractor* Right to File

(1) The *contractor* will retain a nonexclusive royalty-free license throughout the world in each subject invention to which the Government obtains title, except if the *contractor* fails to disclose the invention within the times specified in (c), above. The *contractor's* license extends to its domestic subsidiary and affiliates, if any, within the corporate structure of which the *contractor* is a party and includes the right to grant sublicenses of the same scope to the extent the *contractor* was legally obligated to do so at the time the *contract* was awarded. The license is transferable only with the approval of the *Federal agency* except when transferred to the successor of that party of the *contractor's* business to which the invention pertains.

(2) The *contractor's* domestic license may be revoked or modified by the *funding Federal agency* to the extent necessary to achieve expeditious practical application of the subject invention pursuant to an application for an exclusive license submitted in accordance with applicable provisions at 37 CFR part 404 and *agency* licensing regulations (if any). This license will not be revoked in that field of use or the geographical areas in which the *contractor* has achieved practical application and continues to make the benefits of the invention reasonably accessible to the public. The license in any foreign country may be revoked or modified at the discretion of the *funding Federal agency* to the extent the

contractor, its licensees, or the domestic subsidiaries or affiliates have failed to achieve practical application in that foreign country.

(3) Before revocation or modification of the license, the *funding Federal agency* will furnish the *contractor* a written notice of its intention to revoke or modify the license, and the *contractor* will be allowed thirty days (or such other time as may be authorized by the *funding Federal agency* for good cause shown by the *contractor*) after the notice to show cause why the license should not be revoked or modified. The *contractor* has the right to appeal, in accordance with applicable regulations in 37 CFR part 404 and *agency* regulations (if any) concerning the licensing of Government-owned inventions, any decision concerning the revocation or modification of the license.

(f) *Contractor* Action to Protect the Government's Interest

(1) The *contractor* agrees to execute or to have executed and promptly deliver to the *Federal agency* all instruments necessary to (i) establish or confirm the rights the Government has throughout the world in those subject inventions to which the *contractor* elects to retain title, and (ii) convey title to the *Federal agency* when requested under paragraph (d) above and to enable the government to obtain patent protection throughout the world in that subject invention.

(2) The *contractor* agrees to require, by written agreement, its employees, other than clerical and nontechnical employees, to disclose promptly in writing to personnel identified as responsible for the administration of patent matters and in a format suggested by the *contractor* each subject invention made under *contract* in order that the *contractor* can comply with the disclosure provisions of paragraph (c), above, and to execute all papers necessary to file patent applications on subject inventions and to establish the government's rights in the subject inventions. This disclosure format should require, as a minimum, the information required by (c)(1), above. The *contractor* shall instruct such employees through employee agreements or other suitable educational programs on the importance of reporting inventions in sufficient time to permit the filing of patent applications prior to U.S. or foreign statutory bars.

(3) The *contractor* will notify the *Federal agency* of any decisions not to continue the prosecution of a patent application, pay maintenance fees, or defend in a reexamination or opposition proceeding on a patent, in any country, not less than thirty days before the expiration of the response period required by the relevant patent office.

(4) The *contractor* agrees to include, within the specification of any United States patent applications and any patent issuing thereon covering a subject invention, the following statement, "This invention was made with government support under (identify the *contract*) awarded by (identify the Federal agency). The government has certain rights in the invention."

(g) Subcontracts

(1) The *contractor* will include this clause, suitably modified to identify the parties, in all subcontracts, regardless of tier, for experimental, developmental or research work. The subcontractor will retain all rights provided for the *contractor* in this clause, and the *contractor* will not, as part of the consideration for awarding the subcontract, obtain rights in the subcontractor's subject inventions.

(2) In the case of subcontracts, at any tier, when the prime award with the Federal agency was a contract (but not a grant or cooperative agreement), the *agency,* subcontractor, and the contractor agree that the mutual obligations of the parties created by this clause constitute a contract between the subcontractor and the Federal agency with respect to the matters covered by the clause; provided, however, that nothing in this paragraph is intended to confer any jurisdiction under the Contract Disputes Act in connection with proceedings under paragraph (j) of this clause.

(h) Reporting on Utilization of Subject Inventions

The *Contractor* agrees to submit on request periodic reports no more frequently than annually on the utilization of a subject invention or on efforts at obtaining such utilization that are being made by the *contractor* or its licensees or assignees. Such reports shall include information regarding the status of development, date of first commercial sale or use, gross royalties received by the contractor, and such other data and information as the *agency* may reasonably specify. The *contractor* also agrees to provide additional reports as may be requested by the *agency* in connection with any march-in proceeding undertaken by the *agency* in accordance with paragraph (j) of this clause. As required by 35 U.S.C. 202(c)(5), the *agency* agrees it will not disclose such information to persons outside the government without permission of the *contractor.*

(i) Preference for United States Industry

Notwithstanding any other provision of this clause, the *contractor* agrees that neither it nor any assignee will grant to any person the exclusive right to use or sell any subject inventions in the United States unless such person agrees that any products embodying the subject invention or produced through the use of the subject invention will be manufactured substantially in the United States. However, in individual cases, the requirement for such an agreement may be waived by the *Federal agency* upon a showing by the *contractor* or its assignee that reasonable but unsuccessful efforts have been made to grant licenses on similar terms to potential licensees that would be likely to manufacture substantially in the United States or that under the circumstances domestic manufacture is not commercially feasible.

(j) March-in Rights

The *contractor* agrees that with respect to any subject invention in which it has acquired title, the *Federal agency* has the right in accordance with the procedures in 37 CFR 401.6 and any supplemental regulations of the *agency* to require the *contractor,* an assignee or exclusive licensee of a subject invention to grant a nonexclusive, partially exclusive, or exclusive license in any field of use to a responsible applicant or applicants, upon terms that are reasonable under the circumstances, and if the *contractor,* assignee, or exclusive licensee refuses such a request the *Federal agency* has the right to grant such a license itself if the *Federal agency* determines that:

(1) Such action is necessary because the *contractor* or assignee has not taken, or is not expected to take within a reasonable time, effective steps to achieve practical application of the subject invention in such field of use.

(2) Such action is necessary to alleviate health or safety needs which are not reasonably satisfied by the *contractor,* assignee or their licensees;

(3) Such action is necessary to meet requirements for public use specified by Federal regulations and such requirements are not reasonably satisfied by the *contractor,* assignee or licensees; or

(4) Such action is necessary because the agreement required by paragraph (i) of this clause has not been obtained or waived or because a licensee of the exclusive right to use or sell any subject invention in the United States is in breach of such agreement.

(k) Special Provisions for *Contracts* with Nonprofit Organizations

If the *contractor* is a nonprofit organization, it agrees that:

(1) Rights to a subject invention in the United States may not be assigned without the approval of the *Federal agency,* except where such assignment is made to an organization which has as one of its primary functions the management of inventions, provided that such assignee will be subject to the same provisions as the *contractor;*

(2) The *contractor* will share royalties collected on a subject invention with the inventor, including Federal employee co-inventors (when the agency deems it appropriate) when the subject invention is assigned in accordance with 35 U.S.C. 202(e) and 37 CFR 401.10;

(3) The balance of any royalties or income earned by the *contractor* with respect to subject inventions, after payment of expenses (including payments to inventors) incidental to the administration of subject inventions, will be utilized for the support of scientific research or education; and

(4) It will make efforts that are reasonable under the circumstances to attract licensees of subject invention that are small business firms and that it will give a preference to a small business firm when licensing a subject invention if the *contractor* determines that the small business firm has a plan or proposal for marketing the invention which, if executed, is equally as likely to bring the invention to practical application as any plans or proposals from applicants that are not small business firms; provided, that the *contractor* is also satisfied that the small business firm has the capability and resources to carry out its plan or proposal. The decision whether to give a preference in any specific case will be at the discretion of the *contractor.* However, the *contractor* agrees that the Secretary may review the *contractor's* licensing program and decisions regarding small business applicants, and the *contractor* will negotiate changes to its licensing policies, procedures, or practices with the Secretary when the Secretary's review discloses that the *contractor* could take reasonable steps to implement more effectively the requirements of this paragraph (k)(4).

(l) Communication

Any communications to be given hereunder by either party to the other shall be deemed to be duly given if set forth in writing and personally delivered or sent by mail, registered or certified, postage prepaid with return receipt requested, as follows:

Council Chair
Jefferson Parish Council
200 Derbigny Street, Suite 6200
Gretna, Louisiana 70053

Written notices hereunder delivered personally shall be deemed communicated as of actual receipt; mailed notices shall be deemed communicated five (5) days after deposit in the mail, post prepaid, certified, in accordance with this Paragraph.

CLEAN AIR ACT AND FEDERAL WATER POLLUTION CONTROL ACT
(For all awarded contracts with a value greater than $150,000.00)

(1) The contractor agrees to comply with all applicable standards, orders or regulations issued pursuant to the Clean Air Act, as amended, 42 U.S.C. § 7401 et seq. and the Federal Water Pollution Control Act, as amended, 33 U.S.C. 1251 et seq.

(2) The contractor agrees to report each violation to Jefferson Parish and understands and agrees that the Jefferson Parish will, in turn, report each violation as required to assure notification to the recipient, Federal Emergency Management Agency, and the appropriate Environmental Protection Agency Regional Office.

(3) The contractor agrees to include these requirements in each subcontract exceeding $150,000 financed in whole or in part with federal assistance provided by FEMA.

DEBARMENT AND SUSPENSION
(Contractor must complete certification and submit prior to award.)

The Contractor represents and warrants that it and its subcontractors are not listed on the governmentwide exclusions in the System for Award Management (SAM), in accordance with the OMB guidelines at 2 CFR 180 that implement Executive Orders 12549 (3 CFR part 1986 Comp., p. 189) and 12689 (3 CFR part 1989 Comp., p. 235), "Debarment and Suspension."

This contract is a covered transaction for purposes of 2 C.F.R. Part 180 and 2 C.F.R. Part 3000. As such, the contractor is required to verify that none of the contractor's principals (defined at 2 C.F.R. § 180.995) or its affiliates (defined at 2 C.F.R. § 180.905) are excluded (defined at 2 C.F.R. § 180.940) or disqualified (defined at 2 C.F.R. § 180.935).

The contractor must comply with 2 C.F.R. Part 180, subpart C and 2 C.F.R. Part 3000, subpart C, and must include a requirement to comply with these regulations in any lower tier covered transaction it enters into.

This certification is a material representation of fact relied upon by (insert name of recipient/subrecipient/applicant). If it is later determined that the contractor did not comply with 2 C.F.R. Part 180, subpart C and 2 C.F.R. Part 3000, subpart C, in addition to remedies available to (insert name of recipient/subrecipient/applicant), the federal government may pursue available remedies, including but not limited to suspension and/or debarment.

APPENDIX A: The ensuing contract for this bid solicitation may be eligible for FEMA reimbursement. As such Appendix A will be applicable accordingly and shall be considered a part of the bid documents. All applicable certifications must be duly completed, signed prior to award. (Bid # 50-00141477 Two year pre-placed contract for emergency repair and/or replacement of traffic signal systems damaged as a result of a natural disaster or other state of emergency for the west bank of Jefferson Parish.)

The bidder or proposer agrees to comply with the requirements of 2 C.F.R. Part 180, subpart C and 2 C.F.R. Part 3000, subpart C while this offer is valid and throughout the period of any contract that may arise from this offer. The bidder or proposer further agrees to include a provision requiring such compliance in its lower tier covered transactions.

BYRD ANTI-LOBBYING AMENDMENT

(Contractor must complete certification and submit prior to award.)

The Contractor certifies, to the best of his or her knowledge and belief that:

1. No federally appropriated funds have been paid or will be paid, by or on behalf of the contractor, to any person for influencing or attempting to influence an officer or employee of any agency, a member of Congress, an officer or employee of Congress, or an employee of a member of Congress in connection with the awarding of any federal contract, the making of any federal grant, the making of any federal loan, the entering into of any cooperative agreement, and the extension, continuation, renewal, amendment, or modification of any federal contract, grant, loan, or cooperative agreement.

2. If any funds other than federally appropriated funds have been paid or will be paid to any person for influencing or attempting to influence an officer or employee of any agency, a member of Congress, an officer or employee of Congress, or an employee of a member of Congress in connection with this federal contract, grant, loan, or cooperative agreement, the contractor shall complete and submit Standard Form-LLL, "Disclosure Form to Report Lobbying," in accordance with its instructions.

3. Contractor will include language of this certification in all subcontract awards at any tier and require that all recipients of subcontract awards in excess of $100,000.00 shall certify and disclose accordingly.

PROCUREMENT OF RECOVERED MATERIALS

(for all purchase price of items exceeding $10,000.00 or the value of the quantity acquired during the preceding fiscal year exceeded $10,000.00)

(1) In the performance of this contract, the Contractor shall make maximum use of products containing recovered materials that are EPA-designated items unless the product cannot be acquired:

i. Competitively within a timeframe providing for compliance with the contract performance schedule;
ii. Meeting contract performance requirements; or
iii. At a reasonable price.

APPENDIX A: The ensuing contract for this bid solicitation may be eligible for FEMA reimbursement. As such Appendix A will be applicable accordingly and shall be considered a part of the bid documents. All applicable certifications must be duly completed, signed prior to award. (Bid # 50-00141477 Two year pre-placed contract for emergency repair and/or replacement of traffic signal systems damaged as a result of a natural disaster or other state of emergency for the west bank of Jefferson Parish.)

(2) Information about this requirement, along with the list of EPA-designated items, is available at EPA's Comprehensive Procurement Guidelines webpage:
https://www.epa.gov/smm/comprehensive- procurement-guideline-cpg-program.

(3) The Contractor also agrees to comply with all other applicable requirements of Section 6002 of the Solid Waste Disposal Act.

PROHIBITION ON CONTRACTING FOR COVERED TELECOMMUNICTIONS EQUIPMENT OR SERVICES
(for all FEMA declarations and awards)

Prohibition on Contracting for Covered Telecommunications Equipment or Services

(a) Definitions. As used in this clause, the terms backhaul; covered foreign country; covered telecommunications equipment or services; interconnection arrangements; roaming; substantial or essential component; and telecommunications equipment or services have the meaning as defined in FEMA Policy 405-143-1, Prohibitions on Expending FEMA Award Funds for Covered Telecommunications Equipment or Services (Interim), as used in this clause—

(b) Prohibitions.

(1) Section 889(b) of the John S. McCain National Defense Authorization Act for Fiscal Year 2019, Pub. L. No. 115-232, and 2 C.F.R. § 200.216 prohibit the head of an executive agency on or after Aug.13, 2020, from obligating or expending grant, cooperative agreement, loan, or loan guarantee funds on certain telecommunications products or from certain entities for national security reasons.

(2) Unless an exception in paragraph (c) of this clause applies, the contractor and its subcontractors may not use grant, cooperative agreement, loan, or loan guarantee funds from the Federal Emergency Management Agency to:

(i) Procure or obtain any equipment, system, or service that uses covered telecommunications equipment or services as a substantial or essential component of any system, or as critical technology of any system;

(ii) Enter into, extend, or renew a contract to procure or obtain any equipment, system, or service that uses covered telecommunications equipment or services as a substantial or essential component of any system, or as critical technology of any system;

(iii) Enter into, extend, or renew contracts with entities that use covered telecommunications equipment or services as a substantial or essential component of any system, or as critical technology as part of any system; or

(iv) Provide, as part of its performance of this contract, subcontract, or other contractual instrument, any equipment, system, or service that uses covered telecommunications equipment or services as a substantial or essential component of any system, or as critical technology as part of any system.

(c) Exceptions.

(1) This clause does not prohibit contractors from providing—

(i) A service that connects to the facilities of a third-party, such as backhaul, roaming, or interconnection arrangements; or

(ii) Telecommunications equipment that cannot route or redirect user data traffic or permit visibility into any user data or packets that such equipment transmits or otherwise handles.

(2) By necessary implication and regulation, the prohibitions also do not apply to:

(i) Covered telecommunications equipment or services that:

i. Are not used as a substantial or essential component of any system; and

ii. Are not used as critical technology of any system.

(ii) Other telecommunications equipment or services that are not considered covered telecommunications equipment or services.

(d) Reporting requirement.

(1) In the event the contractor identifies covered telecommunications equipment or services used as a substantial or essential component of any system, or as critical technology as part of any system, during contract performance, or the contractor is notified of such by a subcontractor at any tier or by any other source, the contractor shall report the information in paragraph (d)(2) of this clause to the recipient or subrecipient, unless elsewhere in this contract are established procedures for reporting the information.

(2) The Contractor shall report the following information pursuant to paragraph (d)(1) of this clause:

(i) Within one business day from the date of such identification or notification: The contract number; the order number(s), if applicable; supplier name; supplier unique entity identifier (if known); supplier Commercial and Government Entity (CAGE) code (if known); brand; model number (original equipment manufacturer number, manufacturer part number, or wholesaler number); item description; and any readily available information about mitigation actions undertaken or recommended.

(ii) Within 10 business days of submitting the information in paragraph (d)(2)(i) of this clause: Any further available information about mitigation actions undertaken or recommended. In addition, the contractor shall describe the efforts it undertook to prevent use or submission of covered telecommunications equipment or services, and any additional efforts that will be incorporated to prevent future use or submission of covered telecommunications equipment or services.

(e) Subcontracts. The Contractor shall insert the substance of this clause, including this paragraph (e), in all subcontracts and other contractual instruments.

DOMESTIC PRERENCES FOR PROCUREMENTS

(for all FEMA declarations and awards)

As appropriate, and to the extent consistent with law, the contractor should, to the greatest extent practicable, provide a preference for the purchase, acquisition, or use of goods, products, or materials produced in the United States. This includes, but is not limited to iron, aluminum, steel, cement, and other manufactured products.

For purposes of this clause:

Produced in the United States means, for iron and steel products, that all manufacturing processes, from the initial melting stage through the application of coatings, occurred in the United States.

Manufactured products mean items and construction materials composed in whole or in part of non-ferrous metals such as aluminum; plastics and polymer-based products such as polyvinyl chloride pipe; aggregates such as concrete; glass, including optical fiber; and lumber.

ACCESS TO RECORDS

The following access to records requirements applies to this contract:

APPENDIX A: The ensuing contract for this bid solicitation may be eligible for FEMA reimbursement. As such Appendix A will be applicable accordingly and shall be considered a part of the bid documents. All applicable certifications must be duly completed, signed prior to award. (Bid # 50-00141477 Two year pre-placed contract for emergency repair and/or replacement of traffic signal systems damaged as a result of a natural disaster or other state of emergency for the west bank of Jefferson Parish.)

(1) The contractor agrees to provide Jefferson Parish, the recipient, the FEMA Administrator, the Comptroller General of the United States, or any of their authorized representatives access to any books, documents, papers, and records of the Contractor which are directly pertinent to this contract for the purposes of making audits, examinations, excerpts, and transcriptions.

(2) The Contractor agrees to permit any of the foregoing parties to reproduce by any means whatsoever or to copy excerpts and transcriptions as reasonably needed.

(3) The contractor agrees to provide the FEMA Administrator or his authorized representatives access to construction or other work sites pertaining to the work being completed under the contract.

DHS SEAL, LOGO, AND FLAGS

The contractor shall not use the DHS seal(s), logos, crests, or reproductions of flags or likenesses of DHS agency officials without specific FEMA preapproval. The contractor shall include this provision in any subcontracts.

COMPLIANCE WITH FEDERAL LAW, REGULATIONS, AND EXECUTIVE ORDERS

This is an acknowledgement that FEMA financial assistance will be used to fund all or a portion of the contract. The contractor will comply with all applicable federal law, regulations, executive orders, FEMA policies, procedures, and directives.

NO OBLIGATION BY FEDERAL GOVERNMENT

The Federal Government is not a party to this contract and is not subject to any obligations or liabilities to the non-Federal entity, contractor, or any other party pertaining to any matter resulting from the contract.

PROGRAM FRAUD AND FALSE OR FRAUDULENT STATEMENTS OR RELATED ACTS

The contractor acknowledges that 31 U.S.C. Chap. 38 (Administrative Remedies for False Claims and Statements) applies to the contractor's actions pertaining to this contract.

AFFIRMATIVE SOCIOECONOMIC STEPS

APPENDIX A: The ensuing contract for this bid solicitation may be eligible for FEMA reimbursement. As such Appendix A will be applicable accordingly and shall be considered a part of the bid documents. All applicable certifications must be duly completed, signed prior to award. (Bid # 50-00141477 Two year pre-placed contract for emergency repair and/or replacement of traffic signal systems damaged as a result of a natural disaster or other state of emergency for the west bank of Jefferson Parish.)

If subcontracts are to be let, the prime contractor is required to take all necessary steps identified in 2 C.F.R. § 200.321(b)(1)-(5) to ensure that small and minority businesses, women's business enterprises, and labor surplus area firms are used when possible.

COPYRIGHT

License and Delivery of Works Subject to Copyright and Data Rights

The Contractor grants to the Jefferson Parish, a paid-up, royalty-free, nonexclusive, irrevocable, worldwide license in data first produced in the performance of this contract to reproduce, publish, or otherwise use, including prepare derivative works, distribute copies to the public, and perform publicly and display publicly such data. For data required by the contract but not first produced in the performance of this contract, the Contractor will identify such data and grant to the Jefferson Parish or acquires on its behalf a license of the same scope as for data first produced in the performance of this contract. Data, as used herein, shall include any work subject to copyright under 17 U.S.C. § 102, for example, any written reports or literary works, software and/or source code, music, choreography, pictures or images, graphics, sculptures, videos, motion pictures or other audiovisual works, sound and/or video recordings, and architectural works. Upon or before the completion of this contract, the Contractor will deliver to the Jefferson Parish data first produced in the performance of this contract and data required by the contract but not first produced in the performance of this contract in formats acceptable by the Jefferson Parish.

CONFLICT OF INTEREST

Jefferson Parish adheres to the Louisiana Code of Governmental Ethics, contained in Louisiana Revised Statutes Annotated, R.S. 42:1101, et seq. Vendor/Proposer by this submission warrants that there are no "conflicts of interest" related to this procurement that would violate applicable Louisiana Law. Violation of the Louisiana Code of Governmental Ethics may result in rescission of contract, permit or licenses, and the imposition of fines and/or penalties, without contractual liability to the public in accordance with applicable law.

BUY AMERICAN PROVISION

Pursuant to 2CFR200, performance of the Buy American Provision, for all Federal Grants not only for the agricultural commodities:

Definition of domestic commodity or product: the term 'domestic commodity or product' means -

* An agricultural commodity that is produced in the United States; and

APPENDIX A: The ensuing contract for this bid solicitation may be eligible for FEMA reimbursement. As such Appendix A will be applicable accordingly and shall be considered a part of the bid documents. All applicable certifications must be duly completed, signed prior to award. (Bid # 50-00141477 Two year pre-placed contract for emergency repair and/or replacement of traffic signal systems damaged as a result of a natural disaster or other state of emergency for the west bank of Jefferson Parish.)

* A food product that is processed in the United States substantially using agricultural commodities that are produced in the United States.

* Any commodity required by the Federal Grant to be domestically manufactured; parts or equipment to be manufactured in the United States.

The Department shall require that a school food authority purchase, to the maximum extent practicable, domestic commodities or products.

1. The SFA and vendor shall comply with the **Buy American Provision** for all solicitations and contracts that involve the purchase of food, USDA Regulation (7 CFR Part 250 and 7 CFR Part 210). The vendor is required to utilize, to the maximum extent practicable, domestic commodities and products. This requirement pertains to component items. It does not include spices, sauces, etc.

The District participates in the National School Lunch Program and School Breakfast Program and is required to use the nonprofit food service funds, to the maximum extent practical, to buy domestic commodities or products for Program meals. A "domestic commodity or product" is defined as one that is either produced in the U.S. or is processed in the U.S. substantially using agricultural commodities that are produced in the U.S. as provided in 7 CFR Part 210.21(d). Section 12(n) of the National School Lunch Act defines "domestic commodity or product" as an agricultural commodity that is produced in the U.S. and a food product that is processed in the U.S. Substantially means over 51% of the final processed product (by weight or volume) must consist of agricultural commodities that were grown domestically. The Buy American provision must be followed in all procurements where funds are used from the nonprofit food service account, whether directly by an SFA or on its behalf.

Exceptions to the Buy American provision should be used as a last resort; however, an alternative or exception may be approved upon request. To be considered for the alternative or exception, the request must be submitted in writing to a designated official, a minimum of day 14 days in advance of delivery. The request must include the:

A. Alternative substitute (s) that are domestic and meet the required specifications:
1. The product is not produced or manufactured in the U.S. in sufficient and reasonably available quantities of a satisfactory quality; or

2. Competitive bids reveal the costs of a U.S. product are significantly higher than the non-domestic product.

APPENDIX A: The ensuing contract for this bid solicitation may be eligible for FEMA reimbursement. As such Appendix A will be applicable accordingly and shall be considered a part of the bid documents. All applicable certifications must be duly completed, signed prior to award. (Bid # 50-00141477 Two year pre-placed contract for emergency repair and/or replacement of traffic signal systems damaged as a result of a natural disaster or other state of emergency for the west bank of Jefferson Parish.)

APPENDIX A: The ensuing contract for this bid solicitation may be eligible for FEMA reimbursement. As such Appendix A will be applicable accordingly and shall be considered a part of the bid documents. All applicable certifications must be duly completed, signed prior to award. (Bid # 50-00141477 Two year pre-placed contract for emergency repair and/or replacement of traffic signal systems damaged as a result of a natural disaster or other state of emergency for the west bank of Jefferson Parish.)

Anti-Lobbying Form

CERTIFICATION OF RESTRICTIONS ON LOBBYING

I, _____, hereby certify on
(name and title of bidder's official)

behalf of _____ that:
(name of bidder)

(1) No Federal appropriated funds have been paid or will be paid, by or on behalf of the undersigned, to any person for influencing or attempting to influence an officer or employee of any agency, a Member of Congress, an officer or employee of Congress, or an employee of a Member of Congress in connection with the awarding of any Federal contract, the making of any Federal grant, the making of any Federal loan, the entering into of any cooperative agreement, and the extension, continuation, renewal, amendment, or modification of any Federal contract, grant, loan, or cooperative agreement.

(2) If any funds other than Federal appropriated funds have been paid or will be paid to any person for influencing or attempting to influence an officer or employee of any agency, a Member of Congress, an officer or employee of Congress, or an employee of a Member of Congress in connection with this Federal contract, grant, loan, or cooperative agreement, the undersigned shall complete and submit standard Form-LLL, "Disclosure Form to Report Lobbying, " in accordance with its instructions.

(3) The undersigned shall require that the language of this certification be included in the award documents for all sub awards at all tiers (including subcontracts, sub grants, and contracts under grants, loans, and cooperative agreements) and that all subrecipients shall certify and disclose accordingly.

This certification is a material representation of fact upon which reliance is placed when this transaction was made or entered into. Submission of this certification is a prerequisite for making or entering into this transaction imposed by section 1352, title 31, U.S. Code. Any person who fails to file the required certification shall be subject to a civil penalty of not less than $10,000 and not more than $100,000 for each such failure.

Executed this _____ day of _____, _____.

By _____
(signature of authorized official)

_____
(title of authorized official)

APPENDIX A: The ensuing contract for this bid solicitation may be eligible for FEMA reimbursement. As such Appendix A will be applicable accordingly and shall be considered a part of the bid documents. All applicable certifications must be duly completed, signed prior to award. (Bid # 50-00141477 Two year pre-placed contract for emergency repair and/or replacement of traffic signal systems damaged as a result of a natural disaster or other state of emergency for the west bank of Jefferson Parish.)

Debarment/Suspension Form

DEBARMENT/SUSPENSION CERTIFICATION

Debarment:

Federal Executive Order (E.O.) 12549 "Debarment" requires that all contractors receiving individual awards, using federal funds, and all subrecipients certify that the organization and its principals are not debarred, suspended, proposed for debarment, declared ineligible, or voluntarily excluded by any Federal department or agency from doing business with the Federal Government. By signing this document you certify that your organization and its principals are not debarred. Failure to comply or attempts to edit this language may disqualify your bid. Information on debarment is available at the following websites: www.sam.gov and https://acquisition.gov/far/index.html see section 52.209-6.

Your signature certifies that neither you nor your principal is presently debarred, suspended, proposed for debarment, declared ineligible, or voluntarily excluded from participation in this transaction by any federal department or agency.

_____
(Name and Title of bidder's official)

_____
(Name of bidder/company)

_____
(Address)

_____
(Address)

PHONE _____ FAX _____

EMAIL _____

_____Signature _____Date

PUBLIC WORKS BID INSTRUCTIONS

A. LOUISIANA CONTRACTOR'S LICENSE FOR THIS PROJECT

Must be in the following category:

Electrical Work

Each bidder shall comply with all rules and regulations of the Louisiana State Licensing Board for Contractors in accordance with existing state laws, and shall comply with the Licensing Requirements of Jefferson Parish Ordinance No. 13574, as amended a copy of which may be obtained from the Office of the Parish Clerk, Suite 6700, Jefferson Parish General Government Building, 200 Derbigny Street, Gretna, Louisiana 70053.

B. PROBABLE CONSTRUCTION RANGES AND PRICES

Range of the Probable Construction Cost for Base Bid: _____

Range of the Probable Construction Cost for Alternate No. 1: _____

Range of the Probable Construction Cost for Alternate No. 2: _____

Range of the Probable Construction Cost for Alternate No. 3: _____

Range of the Previous Contract Cap (Public Work Maintenance Contract): $1,000,000.00 - $2,500,000.00

The purpose and intention of this invitation to bid is to afford all suppliers/contractors an equal opportunity to bid on construction, maintenance, repair, operating, services, supplies and/or equipment listed in this bid proposal. Jefferson Parish will accept one bid only from each vendor. Items bid on must meet or exceed specifications. Where brand names, make, manufacturer or stock numbers are specified, it is for the purpose of establishing certain minimum standards of quality. Bidders may submit for products of equal quality, style, type and character, provided brand names and stock numbers are specified. Complete product data may be required prior to award.

The price quoted for the work shall be stated in figures. In the event there is a difference in unit prices and totals, the unit prices shall prevail. In the event there is a difference in unit prices, written unit prices shall prevail over numerical unit prices.

The quantities listed on the bid form are prepared for comparison of bids and may be approximate. Payment to the contractor will be made in accordance with measurement and payment requirements for bid items and other requirements of the project specifications. Bid item quantities may be increased, decreased, or omitted as provided in the specifications.

Jefferson Parish requires all products to be new (current), and all work must be performed according to standard practices for the project. Unless otherwise specified, no after market parts will be accepted. Unless otherwise specified, all workmanship and materials must have at least a one (1) year guaranty, in writing, from the date of delivery/acceptance of the project.

C. METHODS OF BID SUBMISSION

All bids shall be submitted electronically through Jefferson Parish's eProcurement System online at no charge via Jefferson Parish's electronic procurement page by visiting www.jeffparishbids.net. Registration and use of this site are free to Jefferson Parish vendors. Additional instructions are included in the text box highlighting electronic procurement.

Only bids properly signed (see more below) will be accepted. NO LATE BIDS WILL BE ACCEPTED. The name of the bidder must be legibly shown. If the bidder is an individual, their name and address should be shown. If the bidder is an entity, the name of the person given the requisite authority to submit the bid on behalf of the entity shall be shown and the address of the entity's place of business should be shown.

Evidence of agency, corporate, limited liability or partnership authority of the person submitting and signing the bid is required for submission of bid. A copy of a corporate resolution or other signature authorization shall be required for submission of the bid. Failure to include a copy of the appropriate signature authorization will result in the rejection of the bid unless bidder has complied with LSA-R.S. 38:2212(B)(5). Photostatic or font signatures shall result in the bid being rejected. However, an electronic signature as defined in LSA-R.S. 9:2602(8) is acceptable. Signature must be a secured digital signature. A sample corporate resolution and sample certification of sole proprietorship can be downloaded from the Jefferson Parish Purchasing Department's website http://purchasing.jeffparish.net, or you may provide your own document.

D. TIMELINES

1. Prior to the closing time for receipt of scheduled bids

A bid may be withdrawn at any time prior to the scheduled closing time for receipt of bids, provided a request in writing, executed by the bidder or his duly authorized representative, is filed with the Parish prior to that time. When such a request is received, the bid will be returned to the bidder unopened. However, no bid can be modified, corrected or withdrawn after the time set for closing such bid, except as provided by LSA-R.S. 38:2214(C) & (D).

The Parish, its engineers, architects or anyone distributing plans and specifications for Parish public work projects, equal to or over the contract limit as defined in LA-R.S. 38:2212, shall furnish all prime bidders who request bid documents and who are properly licensed by the Louisiana State Licensing Board for Contractors with at least one set of complete bid documents. A deposit or fee may be charged on the documents as authorized by LA-R.S. 38:2212.

Addenda may be issued, as authorized by LA-R.S. 38:2212 (O). All formal Addenda require written acknowledgment on the bid form by the bidder. Failure to acknowledge an Addendum on the bid form shall cause the bid to be rejected. Jefferson Parish reserves the right to award the bid to the next lowest responsive and responsible bidder in this event.

Prior to submitting a bid each bidder shall visit the site of the proposed work and fully acquaint himself with all surface and subsurface conditions as they may exist so that he may fully understand the facilities, difficulties, and restrictions attending the execution of the work under this Contract. Bidders shall also thoroughly examine and be familiar with Drawings, Specifications, and Contract Documents. The failure or omission of any bidder to receive or examine any form, instrument, drawing, or document or to visit the site and acquaint himself with conditions there existing, shall in no way relieve any bidder from any obligation with respect to

his bid and the responsibility in the premises rests with him. Submission of a bid shall be considered prima facie evidence that the bidder has made such examination and is satisfied as to the conditions to be encountered in performing the work and as to requirements of the plans, project specifications, Resolution No. 141125, as amended, and contract forms.

Any pre-bid test and boring data in connection with subsurface conditions which have been completed by the Parish or its engineers and furnished to the bidder shall not be considered as fully representative of subsurface conditions existing throughout the area tested nor shall they in any way be binding upon the Parish, it being understood that said data is furnished the bidder for his convenience only and the bidder shall be solely responsible for conducting his own boring explorations he deems necessary in preparing his bid. Any prospective bidder wishing to conduct boring explorations on Parish property must obtain written permission from Jefferson Parish prior to such explorations.

No claims shall be made against the Parish for additional compensation due to unforeseen subsurface conditions arising during progress of the work and which might be in variance with the Parish's pre-bid boring data.

2. Post-closing time for receipt of scheduled bids

Except as where provided by law, bidder agrees that this bid shall be legally binding and may not be withdrawn for a period of forty-five (45) calendar days after the scheduled closing time for receiving bids. In the event the Parish issues the Letter of Award (copy of adopted resolution awarding bid by Jefferson Parish Council) during this period, the bid accepted shall continue to remain binding pending execution of the Contract.

Bidder agrees to execute the ensuing Contract and will deliver applicable Bonds to secure the faithful performance thereof.

The Parish of Jefferson reserves the right to cancel this contract for convenience by issuing a thirty (30) day written notice to contractor.

E. BID REVIEW AND AWARD

1. Rejection of Bids

a. Jefferson Parish may reject any and all bids for just cause in accordance with LA R.S. 38:2214(B). Just cause, for the purpose of the construction of public works, is defined, but is not limited to, the following circumstances:

(1) The public entity's unavailability of funds sufficient for the construction of the proposed public work.
(2) The failure of any bidder to submit a bid within an established threshold of the preconstruction estimates for that public work, as part of the bid specifications.
(3) A substantial change by the public entity prior to the award in the scope or design of the proposed public work.
(4) A determination by the public entity not to build the proposed public work within twelve months of the date for the public opening and reading of bids.
(5) The disqualification by the public entity of all bidders.

b. Additionally, bids may be considered irregular and be rejected for any of the following, but is not limited to the following circumstances:

(1) If the bid form is on a form other than that furnished by the Parish or if the form is altered or any part thereof is detached.
(2) If affidavits included in bid form and/or required by law are not returned with the bid or are not properly executed and notarized.
(3) If there are unauthorized additions, conditional or alternate bids or irregularities which alter the general terms and conditions, the plans or specifications, or make the bid incomplete, indefinite, or ambiguous as to its meaning.
(4) If the bidder adds provisions reserving the right to accept or reject the award or to enter into the contract pursuant to the award.
(5) If an owner or a principal officer of the bidding firm is an owner or a principal officer of a firm which has been declared by the Parish to be ineligible to bid.
(6) If the proposed bid security does not meet the requirements of Section J.
(7) If more than one proposal for the same work, services, materials or supplies is received from an individual, partner, firm, corporation, joint venture, other legal entity, or combination thereof under the same or a different name.
(8) The bid is not properly signed or the authority of the signature person submitting the bid is deemed insufficient or unacceptable.
(9) If the bidder does not possess the proper license(s) required as noted in the specifications.
(10) Any other reasons for rejection set forth by State or Parish laws, Ordinances or Resolutions.

c. In awarding contracts for materials and supplies, Jefferson Parish shall reject the lowest bid if received from a bidder domiciled in a Communist country, or if the materials or supplies are manufactured in a Communist country, including but not limited to China, North Korea and Vietnam, and to award the contract to the next lowest bidder. This Section shall not apply to any country having established trade relations agreements or approvals from the government of the United States. (LSA-R.S. 38:2212.3)

2. Disqualification of Bids

a. The causes for disqualification from consideration for award of a contract with Jefferson Parish are as follows (Jefferson Parish Code of Ordinances, Section 2-912):

(1) Conviction for commission of a criminal offense as an incident to obtaining or attempting to obtain a public or private contract or subcontract, or in the performance of such contract or subcontract;
(2) Conviction under state or federal statutes of embezzlement, theft, forgery, bribery, falsification or destruction of records, receiving stolen property, or any other offense indicating a lack of business integrity or business honesty which currently, seriously, and directly affects responsibility as a Parish contractor;
(3) Conviction under state or federal antitrust statutes arising out of the submission of bids or proposals;
(4) Violation of contract provisions, as set forth below, of a character which is regarded by the Purchasing Director or his designee for Jefferson Parish to be serious as to justify disqualification:
    i. Deliberate failure without good cause to perform in accordance with the specifications or within the time limit provided in the contract; or

ii. A recent record of failure to perform or of unsatisfactory performance in accordance with the terms of one or more contracts; provided that failure to perform or unsatisfactory performance caused by acts beyond the control of the contractor shall not be considered to be a basis for disqualification; or

iii. Failure to timely pay, without cause, a subcontractor for work performed under a construction contract as required under Section 2-976 in Chapter 2, Article VII, of the Jefferson Parish Code of Ordinances, provided disqualification on such basis shall not exceed a period of one (1) year from the deadline to pay the subcontractor.

(5) Any other cause the Purchasing Director determines to be so serious and compelling as to affect responsibility as a Parish contractor, including debarment by another governmental entity for any cause;

(6) Violation of the State Code of Ethics or the ethical standards set forth in the Jefferson Parish Code of Ordinances;

(7) Failure to secure and/or maintain necessary licenses and/or permits;

(8) Failure to comply with the Jefferson Parish Code of Ordinances and/or the Jefferson Parish Comprehensive Zoning Ordinance; or failure to comply with or meet bid specifications and/or failure to be a responsible bidder.

(9) A bid which is not responsive to, or does not meet bid specifications, will be rejected as being non-responsive, but that bidder will not be disqualified from future Parish bids, nor will that bidder be given a hearing pursuant to procedure listed below.

b. The procedures for disqualification from consideration for award of a contract with Jefferson Parish are set forth in Sec. 2- 912 (b).

3. Award of Contract

The award of the contract, if it be awarded, will be by the Parish to the lowest responsive and responsible bidder whose proposal shall have complied with all the bid requirements. The successful bidder will be notified via the e-Procurement site that his bid has been accepted. No contract shall be executed with any contractor until their certificates of insurance, performance bonds, labor and materials payment bonds, or any other bonds required are made satisfactory to the Parish.

Jefferson Parish reserves the right to award contracts or place orders on a lump sum or individual item basis, or such combination as shall, in its judgment, be in the best interest of Jefferson Parish. Every contract or order shall be awarded to the lowest responsible bidder, taking into consideration the conformity with the specifications, and the delivery and/or completion date.

Preference will be given to bidders requesting a preference in their bid in accordance with LSA-R.S. 38:2251-2261 for materials, supplies, and provisions, produced, manufactured or grown in Louisiana, quality being equal to articles offered by competitors outside the State of Louisiana, unless federal funding is directly spent by Jefferson Parish on this project.

The successful bidder shall execute the contract with the Parish in the form of the contract included in the specifications, a copy of which is annexed hereto, in such number of counterparts as the Parish may request within twelve (12) days after receipt of notice of award of the contract by the Parish. One copy of the executed contract with all documents forming a part thereof shall be filed at the expense of the contractor, with the Recorder of Mortgages in Jefferson Parish.

PROTESTS: Only those vendors that submit bids in response to this solicitation may protest any element of the procurement, in writing to the Director of the Purchasing Department. Written protest must be received within 48 hours of the release of the bid tabulation by the Purchasing Department. After consultation, the Parish Attorney's Office will then respond to protests in writing. (For more information, please see Chapter 2, Article VII, Division 2, Sec. 2-913 of the Jefferson Parish Code of Ordinances.)

Upon full execution of the contract and receiving a written notice to proceed, the bidder agrees that all work shall be completed as follows:

The work shall be substantially complete within ____ calendar days of the written notice to proceed and completed and shall be ready for final acceptance no more than 30 calendar days after substantial completion.

F. SALES TAX EXEMPTION

For this project, the contractor shall not pay any state or local sales or use taxes on materials and equipment which are affixed and made part of the immovable property of the project or which is permanently incorporated in the project (hereinafter referred to as "applicable materials and equipment"). All purchases of applicable materials or equipment shall be made by the contractor on behalf of and as the agent of Jefferson Parish (Parish), a political subdivision of the State of Louisiana. No state and local sales and use taxes are owed on applicable materials and equipment under the provisions of Act 1029 of the 1991 Regular Session – Louisiana Revised Statute 47:301(8)(c). Parish will furnish to contractor a certificate form which certifies that Parish is not required to pay such state or local sales and use taxes, and contractor shall furnish a copy of such certificate to all vendors or suppliers of the applicable materials and equipment, and report to Parish the amount of taxes not incurred.

G. LIQUIDATED DAMAGES

In accordance with Resolution No. 141125, as amended, Bidder agrees to pay, as liquidated damages, the sum of $ N/A for: (1) each consecutive calendar day after the agreed date of substantial completion that the work remains substantially incomplete, and (2) each consecutive calendar day after the 30th day following the actual date of substantial completion that the work has not been finally completed.

In addition to, but not in lieu of the per diem liquidated damages, Parish shall also be entitled to recover from the contractor or the contractor's surety additional liquidated damages as detailed in Resolution No. 141125, as amended. These additional liquidated damages may include, but are not limited to the following, in the amounts and for each of the items identified in the Supplementary Conditions:

(1)	Extended Architectural and/or Engineering Fees	$ N/A /hour
(2)	Extended Resident Project Representative Fee	$ N/A /hour
(3)	Extended Construction Management Fees	$ N/A /day
(4)	Extended Parish's Overhead and Personnel Expenses	$ N/A /hour

(5) Parish's Other Costs Directly Related to the Delay in Completion Beyond the Contract Times.

Whenever contractor's work requires inspections in excess of the budgeted amount for inspection, the contractor shall reimburse the Parish for the additional costs incurred by the Parish attributable to inspection of the contracted project in excess of the budgeted amount for inspections.

The reasonable budget for such inspections is $N/A. Resident Project Representative overtime rates shall be calculated at 1.2 times the hourly rate. The cost of inspection in excess of this budgeted amount shall be assessed against Contractor's progress payments, all in accordance with Louisiana Public Bid Law.

H. ETHICAL STANDARDS AND COOPERATION WITH THE OFFICE OF THE INSPECTOR GENERAL, INCLUDING CONFLICTS OF INTEREST

Vendor agrees by bid submission to comply with all provisions of Louisiana Law as well as compliance with the Jefferson Parish Code of Ordinances, Louisiana Code of Ethics, as published on http://ethics.la.gov and applicable Jefferson Parish ethical standards and Jefferson Parish Terms and Conditions.

Inspector General: It shall be the duty of every Parish officer, employee, department, agency, special district, board, and commission; and the duty of every contractor, subcontractor, and licensee of the Parish, and the duty of every applicant for certification of eligibility for a Parish contract or program, to cooperate with the Inspector General in any investigation, audit, inspection, performance review, or hearing pursuant to JPCO 2-155.10(19). Every Parish contract and every bid, proposal, application or solicitation for a Parish contract, and every application for certification of eligibility for a Parish contract or program shall contain a statement that the corporation, partnership, or person understands and will abide by all provisions of JPCO 2-155.10. By submitting a bid, Bidder acknowledges this and will abide by all provisions of the referenced JPCO.

Conflicts of Interest: Jefferson Parish adheres to the Louisiana Code of Governmental Ethics, contained in Louisiana Revised Statutes Annotated, R.S. 42:1101, et seq. Vendor/Proposer by this submission warrants that there are no "conflicts of interest" related to this procurement that would violate applicable Louisiana Law. Violation of the Louisiana Code of Governmental Ethics may result in rescission of contract, permit or licenses, and the imposition of fines and/or penalties, without contractual liability to the public in accordance with applicable law.

I. REQUIRED AFFIDAVITS

For convenience, all legally mandated affidavits have been combined into one form, entitled **Public Works Bid Affidavit**. All bidders must submit with their bid submission, a completed, signed and properly notarized affidavit in its original format and without alteration in order to be compliant and for the bid to be considered responsive. A scanned copy of the completed, signed and properly notarized affidavit may be submitted with the bid; however, the successful bidder must submit the original affidavit in its original format and without material alteration prior to, or at contract execution. Failure to comply will result in the bid submission being rejected as non-responsive. The Parish reserves the right to award bid to the next lowest responsive and responsible bidder in this event.

The person submitting the bid, and whose authority to submit has been evidenced on the Corporate Resolution is the proper party to execute the **Public Works Bid Affidavit.**

J. BID REQUIREMENTS (BID DOCUMENTS, SPECIFICATIONS, BONDS, W-9 AND PAYMENT INFO)

Bidders must review the bid specifications and include any required documentation including but not limited to the LA Public Works Uniform Bid Form, Bid Security, Corporate Resolution or written evidence of signature authority, and the Public Works Affidavit. Pursuant to LA R.S. 38:2212(B)(3)(b), bidders shall also be responsible for providing any other documentation as required. Please note that the payment and performance bonds must be supplied by the successful bidder at contract signing.

No oral interpretation will be made to any bidder as to the meaning of the drawings, specifications, or contract documents. Every request for such interpretation shall be made in writing and addressed and forwarded to the Engineer, Architect or person distributing plans and specifications. No inquiry received within five (5) days prior to the day fixed for opening of the bids will be given consideration. Every interpretation made to the bidder shall be in the form of an addendum to the specifications and shall be issued as authorized by LA-R.S. 38:2212(O).

All such addenda shall become a part of the contract documents. Failure of any bidder to receive any such interpretation shall not relieve any bidder from any obligation under his bid as submitted without modification.

The specifications and plans are complementary of each other and all work called for or reasonably implied by either shall be performed as if called for by both. In case of conflict between the requirements of the specifications and plans, the specifications shall take precedence. Figured dimensions shall take precedence over scale dimensions, and larger scale details shall take precedence over smaller scale details in the general work drawings.

All vendors submitting bids shall register as a Jefferson Parish vendor, if not already registered. Registration forms may be downloaded from http://purchasing.jeffparish.net and click on Vendor Information. Current W-9 forms with respective Tax Identification numbers and vendor applications may be submitted at any time; however, if your company is not registered and/or a current W-9 form is not on file, vendor registration is mandatory. Vendors may experience a delay in payment if your company is not a registered vendor with Jefferson Parish.

Bidders must comply with all provisions of this Notice, the Standard General Conditions of the Construction Contract and any special conditions and specifications contained herein, all of which are made part of this bid proposal. Resolution No. 141125, as amended, will be considered a part of the bid whether attached or not. A copy of these terms and resolutions may be obtained from the Office of the Parish Clerk, Suite 6700, Jefferson Parish General Government Building, 200 Derbigny Street, Gretna, Louisiana 70053. Bidders may also obtain a copy by visiting the Purchasing Department's webpage at http://purchasing.jeffparish.net and clicking on online forms.

Bid Security: Bidders shall provide bid security in the form of an electronic bid bond in the amount of five percent (5%) of the total bid price (Base Bid and any Alternates) (as per R.S. 38:2218). The Bid Security shall remain valid until the contract is executed or until final disposition is made of the bids submitted. Such security will become the property of the Parish in the event the successful bidder fails or refuses to execute the contract or fails to produce performance and payment bonds upon contract signing. Bids shall remain binding for at least forty-five (45) days after the date set for the Bid Opening. In the event the Parish issues the Letter of Award during this period, the bid

accepted shall continue to remain binding until the execution of contract. Jefferson Parish and the lowest responsible bidder, by mutual written consent, may agree to extend the deadline for award by one or more extensions of thirty (30) calendar days.

When submitting online, bidders must submit an electronic bid bond through the respective online clearinghouse bond management system(s) as indicated in the electronic bid solicitation on Central Auction House. No scanned paper copies of any bid bond will be accepted as part of the electronic bid submission.

Performance Bond: A performance bond is required in 100% of the contract amount and is due at the signing of the formal contract, unless another percentage is required in the bid specifications. In the event of a conflict between these instructions and the bid specifications, the bid specifications shall control.

Payment Bond: A payment bond is required in 100% of the contract amount and is due at the signing of the formal contract, unless another percentage is required in the bid specifications. In the event of a conflict between these instructions and the bid specifications, the bid specifications shall control.

To the extent permitted by law, the bond requirements as set forth herein are waived insofar as Community Development Housing Rehabilitation Construction Contracts are concerned for single family, owner-occupied dwellings. The Parish Attorney's Office will omit the requirements in connection with Community Development Housing Rehabilitation Construction Contracts for single family, owner-occupied dwellings.

K. INSURANCE REQUIREMENTS

All bidders must submit with bid submission a current (valid) insurance certificate evidencing required coverages. Failure to comply will cause the bid to be rejected. The current insurance certificate will be used for proof of insurance at time of evaluation. Thereafter, and prior to contract execution, the low bidder will be required to provide final insurance certificates to the Parish which shall name the **Jefferson Parish, its Districts, Departments and Agencies under the direction of the Parish President and the Parish Council as additional insureds regarding negligence by the contractor for the Commercial General Liability and the Comprehensive Automobile Liability policies. Additionally, said certificates should reflect the name of the Parish Department receiving goods and services and reference the respective Jefferson Parish bid number.**

JEFFERSON PARISH REQUIRED STANDARD INSURANCE

☒ **WORKER'S COMPENSATION INSURANCE**

As required by Louisiana State Statute, exception; Employer's Liability, Section B shall be $1,000,000 per occurrence when Work is to be over water and involves maritime exposures to cover all employees not covered under the State Worker's Compensation Act, otherwise this limit shall be no less than $500,000 per occurrence.

☒ **COMMERCIAL GENERAL LIABILITY**

Shall provide limits not less than the following: $1,000,000 Combined Single Limit per Occurrence for bodily injury and property damage.

☒ **COMPREHENSIVE AUTOMOBILE LIABILITY**

Bodily injury liability $1,000,000 each person; $1,000,000 each occurrence. Property Damage Liability $1,000,000 each occurrence.

UMBRELLA LIABILITY COVERAGE
An umbrella policy or excess may be used to meet minimum requirements.

FOR CONSTRUCTION AND RENOVATION PROJECTS:
The following are required if selected. Such insurance is due upon contract execution.

☐ **OWNER'S PROTECTIVE LIABILITY**

To be for the same limits of liability for bodily injury and property damage liability established for commercial general liability.

☐ **BUILDER'S RISK INSURANCE**

The contractor shall maintain Builder's Risk Insurance at his own expense to insure both the Parish of Jefferson and contractor as their interest may appear.

INSURANCE DEDUCTIBLES - The Parish Attorney with concurrence of the Director of Risk Management have waived the deductible section of the Terms and Conditions for all Invitations to Bid, until further notice.

L. INDEMNIFICATION

Bidder acknowledges that bidder recovered the cost of any required insurance in the contract price as required by LA R.S. 9:2780.1(I) and that bidder recovered any such cost for the purposes of insuring an obligation to indemnify Jefferson Parish, defend Jefferson Parish, or hold Jefferson Parish harmless and that bidder's indemnity liability is limited to the amount of the proceeds that are payable under the insurance policy or policies that bidder has obtained.

M. FAMILIARITY WITH LAWS AND ORDINANCES

Bidders shall familiarize themselves with and shall comply with all applicable Federal and State Laws, Parish/Municipal Ordinances, Resolutions, and the rules and regulations of all authorities having jurisdiction over construction of the project, which may directly or indirectly affect the work or its prosecution.

These laws and/or ordinances will be deemed to be included in the contract, the same as though herein written in full.

In case of conflict between the requirements of these specifications and any State and/or Federal Regulations or Laws, the State and/or Federal Regulations or Laws shall take precedence in all cases in which State and/or Federal Funding of the contract, in whole or in part, depends upon compliance with said State and/or Federal Regulations or Laws.

N. MISCELLANEOUS

The successful bidder may be required to furnish a statement of the origin, composition, and manufacture of materials to be used in construction of the work together with samples, which samples may be subjected to testing to determine their quality and fitness for the work, as specified.

Bidders are not to exclude from participation in, deny the benefits of, or subject to discrimination under any program or activity, any person in the United States on the grounds of race, color, national origin, sex or religion except that any exemption from such prohibition against discrimination on the basis of religion as provided in the Civil Rights Acts of 1964, or Title VI and VII of the Act of April 11, 1968 shall also apply, as amended; nor discriminate on the basis of age under the Age Discrimination Act of 1975, as amended; nor with respect to an otherwise qualified handicapped individual as provided in Section 504 of the Rehabilitation Act of 1973, as amended. This assurance includes compliance with the administrative requirements of the Revenue Sharing final handicapped discrimination provisions contained in Section 51.55 (c), (d), (e), and (k) (5) of the Regulations.

Non-negotiable contract terms include but are not limited to taxes, assignment of contract, audit of records, EEOC and ADA compliance, record retention, content of contract/order of precedence, contract changes, force majeure, governing law, including ethics statements, claims or controversies, and termination based on contingency of appropriation of funds, as applicable.

Bid Bond

An Electronic Bid Bond must be submitted with this bid, through one of the respective clearing houses at www.jeffparish.net or www.centralbidding.com. To access the bonding companies on Central Bidding, hover over the "Central Bidding" link at the top of the page and select the "Bid Bonds" link.

The electronic bid bond number is to be placed in the required section listed on the standard envelope. Scanned copies of bid bonds will not be accepted with your submission.

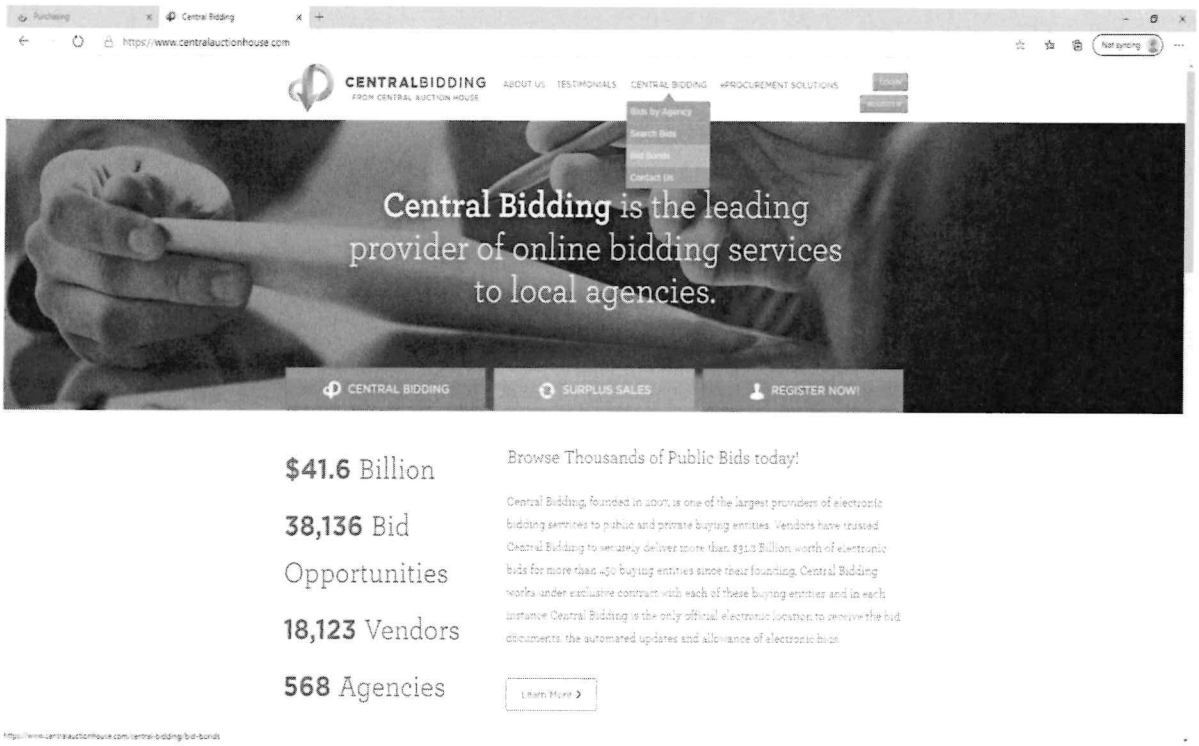

DATE: 5/03/2023

BID NO.: 50-00141477

INVITATION TO BID
THIS IS NOT AN ORDER

JEFFERSON PARISH

PURCHASING DEPARTMENT
P.O. BOX 9
GRETNA, LA. 70054-0009
504-364-2678

BUYER: DREAMEY@jeffparish.net

BIDS WILL BE RECEIVED ONLINE VIA WWW.JEFFPARISHBIDS.NET UNTIL 2:00 PM, 6/01/2023 AND PUBLICLY OPENED THEREAFTER IN THE WEST BANK PURCHASING DEPT, SUITE 4400, JEFFERSON PARISH GENERAL GOVERNMENT BUILDING, 200 DERBIGNY STREET, GRETNA, LA 70053. At no charge, bidders are to submit via Jefferson Parish's electronic procurement page by visiting www.jeffparishbids.net to register for this free site. Additional instructions are included in the text box highlighting electronic procurement.

LATE BIDS WILL NOT BE ACCEPTED

NOTE: ONLY BIDS WRITTEN IN INK OR TYPEWRITTEN, AND PROPERLY SIGNED BY A MEMBER OF THE FIRM OR AUTHORIZED REPRESENTATIVE, WILL BE ACCEPTED. PENCIL AND/OR PHOTOSTATIC FIGURES OR SIGNATURES SHALL RESULT IN BID REJECTION. HOWEVER, ELECTRONIC SIGNATURES AS DEFINED IN LSA - R.S. 9:2620(8) ARE ACCEPTABLE. SIGNATURE MUST BE A SECURED DIGITAL SIGNATURE.

INSTRUCTIONS FOR BIDDERS AND GENERAL CONDITIONS

THE FOLLOWING INSTRUCTIONS APPLY TO ALL BIDS

All bids submitted are subject to these instructions and general conditions and any special conditions and specifications contained herein, all of which are made part of this bid proposal reference. By submitting a bid, vendor agrees to comply with all provisions of Louisiana Law as well be in compliance with the Jefferson Parish Code of Ordinances, Louisiana Code of Ethics, applicable Jefferson Parish ethical standards and Jefferson Parish Resolution No. 113646 and/or Resolution No. 113647.

Jefferson Parish adheres to the Louisiana Code of Governmental Ethics, contained in Louisiana Revised Statutes Annotated, R.S. 42:1101, et seq. Vendor/Proposer by this submission, warrants that there are no "conflicts of interest" related to this procurement that would violate applicable Louisiana Law. Violation of the Louisiana Code of Governmental Ethics may result in rescission of contract, permit or licenses, and the imposition of fines and/or penalties, without contractual liability to the public in accordance with applicable law.

All vendors submitting bids should register as a Jefferson Parish vendor if not already yet registered. Registration forms may be downloaded from http://purchasing.jeffparish.net and by clicking on Vendor Information. Current W-9 forms with respective Tax Identification numbers and vendor applications may be submitted at any time; however, if your company is not registered and/or a current W-9 form is not on file, vendor registration is mandatory. Vendors may experience a delay in payment if your company is not a registered vendor with Jefferson Parish.

All quotations shall be based on F.O.B. Agency warehouse or job site, anywhere within the Parish as designated by the Purchasing Department. This provision does not apply to public works projects

JEFFERSON PARISH requires all products to be new (current) and all work must be performed according to standard practices for the project. Unless otherwise specified, no aftermarket parts will be accepted. Unless otherwise specified, all workmanship and materials must have at least one (1) year guaranty, in writing, from the date of delivery and/or acceptance of the project. Any deviations or alterations from the specifications must be indicated and/or supporting documentation supplied with bid submission.

Bidders should submit all questions in writing via email to the buyer's email address as indicated above, no later than Five (5) working days prior to the bid opening. Bid numbers should be mentioned in all requests. If submitting online, vendors may send questions via the E-Procurement site no later than Five (5) working days prior to the bid opening.

If this bid requires a pre-bid conference (see Additional Requirements section), bidders are advised that such conference will be held to allow bidders the opportunity to identify any discrepancies in the bid specifications and seek further clarification regarding instructions. The Purchasing Department will issue a written response to bidders' questions in the form of an Addendum. Please note that all official communication will be expressed in the form of an addendum.

All formal Addenda require written acknowledgement on the bid form by the bidder. Failure to acknowledge an Addendum on the bid form shall cause the bid to be rejected. JEFFERSON PARISH reserves the right to award bid to next lowest responsive and responsible bidder in this event.

JEFFERSON PARISH will accept one price for each item unless otherwise indicated. Two or more prices for one item will result in bid rejection. Bidders are required to complete, sign and return the bid form and/or complete and return the associated line item pricing forms as indicated. Vendors must not alter the bid forms. Doing so will cause the bid to be rejected.

A corporate resolution or written evidence of the individual signing the bid having such authority must be submitted with the bid. Failure to comply will cause bid to be rejected. For corporate entities, such written evidence may be a printout of the Louisiana Secretary of State's website listing the signatory as an officer. Such printout shall be included with the bid submission. Bids submitted by Owners or Sole Proprietorships must include certification that he or she owns the entity for which the bid is signed. This documentation must be submitted with the bid. Failure to do so will result in bid rejection.

NOTE: A sample corporate resolution can be downloaded from our website http://purchasing.jeffparish.net or you may provide your own document. A sample certification of sole proprietorship can also be downloaded from our website http://purchasing.jeffparish.net or you may provide your own document.

INSTRUCTIONS FOR BIDDERS AND GENERAL CONDITIONS

A. AWARD OF CONTRACT: JEFFERSON PARISH reserves the right to award contracts or place orders on a lump sum or individual item basis, or such combination, as shall in its judgment be in the best interest of JEFFERSON PARISH. Every contract or order shall be awarded to the LOWEST RESPONSIVE and RESPONSIBLE BIDDER, taking into consideration the CONFORMITY WITH THE SPECIFICATIONS and the DELIVERY AND/OR COMPLETION DATE. SPLIT AWARDS MADE TO SEVERAL VENDORS WILL ONLY BE GRANTED TO THOSE DEEMED RESPONSIVE AND RESPONSIBLE.

All bid prices shall remain valid for 45 days. Jefferson Parish and the lowest responsive and responsible bidder(s) by mutual written consent may mutually agree to extend the deadline for award by one (1) or more extensions of thirty (30) calendar days.

PROTESTS: Only those vendors that submit bids in response to this solicitation may protest any element of the procurement, in writing to the Director of the Purchasing Department. Written protest must be received within 48 hours of the release of the bid tabulation by the Purchasing Department. After consultation, the Parish Attorney's Office will then respond to protests in writing. (For more information, please see Chapter 2, Article VII, Division 2, Sec. 2-914.1 of the Jefferson Parish Code of Ordinances.)

PREFERENCE: Unless federal funding is directly spent by Jefferson Parish for this purchase, preference is hereby given to materials, supplies, and provisions produced, manufactured or grown in Louisiana, quality being equal to articles offered by competitors outside the state. "LSA – R.S. 38:2251-2261"

B. USE OF BRAND NAMES AND STOCK NUMBERS: Where brand names and stock numbers are specified, it is for the purpose of establishing certain minimum standards of quality. Bids may be submitted for products of equal quality, provided brand names and stock numbers are specified. Complete product data may be required prior to award.

C. CANCELLATION OF CONTRACT: JEFFERSON PARISH reserves the right to cancel all or any part if not shipped promptly. No charges will be allowed for parking or cartage unless specified in quotation. The order must not be filled at a higher price than quoted. JEFFERSON PARISH reserves the right to cancel any contract at anytime and for any reason by issuing a THIRTY (30) day written notice to the contractor.

For good cause and as consideration for executing a contract with Jefferson Parish, vendor conveys, sells, assigns and transfers to Jefferson Parish or its assigns all rights, title and interest in and to all causes of action it may now or hereafter acquire under the antitrust laws of the United States and the State of Louisiana, relating to the particular good or services purchased or acquired by Jefferson Parish.

D. PRICES: Jefferson Parish is exempt from paying sales tax under LSA-R.S. 47:301 (8)(c). All prices for purchases by Jefferson Parish of supplies and materials shall be quoted in the unit of measure specified and unless otherwise specified, shall be exclusive of state and local taxes. For purchases of labor and materials, the Contractor shall not pay any state or local sales or use taxes on materials and equipment which are affixed and made part of the immovable property of the project or which permanently incorporated in the project (hereinafter referred to as "applicable materials and equipment"). All purchases of applicable materials or equipment shall be made by the contractor on behalf of and as the agent of Jefferson Parish (Owner), a political subdivision of the State of Louisiana. No state and local sales and use taxes are owned on applicable materials and equipment under the provisions of Act 1029 of the 1991 Regular Session - Louisiana Revised Statute 47:301(8)(c). Owner will furnish contractor a certificate form which certifies that Owner is not required to pay such state or local sales and use taxes, and contractor shall furnish a copy of such certificate to all vendors or suppliers of the applicable materials and equipment. The price quoted for work shall be stated in figures. In the event there is a difference in unit prices and totals, the unit price shall prevail.

Quantities listed are for bidding purposes only. Actual requirements may be more or less than quantities listed.

Bidders are not to exclude from participation in, deny the benefits of, or subject to discrimination under any program or activity, any person in the United States on the grounds of race, color, national origin, or sex; nor discriminate on the basis of age under the Age Discrimination Act of 1975, or with respect to an otherwise qualified handicapped individual as provided in Section 504 of the Rehabilitation Act of 1973, or on the basis of religion, except that any exemption from such prohibition against discrimination on the basis of religion as provided in the Civil Rights Act of 1964, or Title VI and VII of the Act of April 11, 1968, shall also apply. This assurance includes compliance with the administrative requirements of the Revenue Sharing final handicapped discrimination provisions contained in Section 51.55 (c), (d), (e), and (k)(5) of the Regulations. New construction or renovation projects must comply with Section 504 of the 1973 Rehabilitation Act, as amended, in accordance with the American National Standard Institute's specifications (ANSI A17.1-1961).

INSTRUCTIONS FOR BIDDERS AND GENERAL CONDITIONS

Jefferson Parish and its partners as the recipients of federal funds are fully committed to awarding a contract(s) to firm(s) that will provide high quality services and that are dedicated to diversity and to containing costs. Thus, Jefferson Parish strongly encourages the involvement of minority and/or woman-owned business enterprises (DBE's, including MBE's, WBE's and SBE's) to stimulate participation in procurement and assistance programs.

The purpose and intention of this invitation to bid is to afford all suppliers an equal opportunity to bid on all construction, maintenance, repair, operating supplies and/or equipment listed in this bid proposal. JEFFERSON PARISH WILL ACCEPT ONE BID ONLY FROM EACH VENDOR. Items bid must meet specifications.

Advertised bids will be tabulated and a copy of the tabulation will be forwarded to each responding bidder.

IN ACCORDANCE WITH STATE REGULATIONS JEFFERSON PARISH OFFERS ELECTRONIC PROCUREMENT TO ALL VENDORS

This electronic procurement system allows vendors the convenience of reviewing and submitting bids online. This is a secure site and authorized personnel have limited read access only. Bidders are to submit electronically using this free service; while the website accepts various file types, one single PDF file containing all appropriate and required bid documents is preferred. Bidders submitting uploaded images of bid responses are solely responsible for clarity. If uploaded images/documents are not legible, then bidder's submission will be rejected. Please note all requirements contained in this bid package for electronic bid submission.

Please visit our E-Procurement Page at www.jeffparishbids.net to register and view Jefferson Parish solicitations. For more information, please visit the Purchasing Department page at http://purchasing.jeffparish.net.

The general specifications for construction projects and the purchase of materials, services and/or supplies are those adopted by the JEFFERSON PARISH Council by Resolution No. 113646 or 113647 as amended. The general conditions adopted by this resolution shall be considered as much a part of this document as if they were written wholly herein. A copy may be obtained from the Office of the Parish Clerk, Suite 6700, Jefferson Parish General Government Building, 200 Derbigny Street, Gretna, LA 70053.
You may also obtain a copy by visiting the Purchasing Department webpage at http://purchasing.jeffparish.net and clicking on Online Forms.

ADDITIONAL REQUIREMENTS FOR THIS BID

PLEASE MATCH THE NUMBERS PRINTED IN THIS BOX WITH THE CORRESPONDING INSTRUCTIONS BELOW.

3,4,6,7,10,11,12,13,14,16,17

1. All bidders must attend the MANDATORY pre-bid conference and will be required to sign in and out as evidence of attendance. In accordance with LSA R.S. 38:2212(I), all prospective bidders shall be present at the beginning of the MANDATORY pre-bid conference and shall remain in attendance for the duration of the conference. Any prospective bidder who fails to attend the conference or remain for the duration shall be prohibited from submitting a bid for the project.

2. Attendance to this pre-bid conference is optional. However, failure to attend the pre-bid conference shall not relieve the bidder of responsibility for information discussed at the conference. Furthermore, failure to attend the pre-bid conference and inspection does not relieve the successful bidder from the necessity of furnishing materials or performing any work that may be required to complete the work in accordance with the specification with no additional cost to the owner.

3. Contractor must hold current applicable JEFFERSON PARISH licenses with the Department of Inspection and Code Enforcement. Contractor shall obtain any and all permits required by the JEFFERSON PARISH Department of Inspection and Code Enforcement. The contractor shall be responsible for the payment of these permits. All permits must be obtained prior to the start of the project. Contractor must also hold any and all applicable Federal and State licenses. Contractor shall be responsible for the payment of these permits and shall obtain them prior to the start of the project.

INSTRUCTIONS FOR BIDDERS AND GENERAL CONDITIONS

4. A LA State Contractor's License will be required in accordance with LSA R.S. 37-2150 et. seq. and such license number will be shown on the outside of the bid electronic envelope. Failure to comply will cause the bid to be rejected. When submitting the bid electronically, the license number must be entered in the appropriate field in the electronic procurement system. Failure to comply will cause the bid to be rejected.

5. It is the bidder's responsibility to visit the job site and evaluate the job before submitting a bid.

6. Job site must be clean and free of all litter and debris daily and upon completion of the contract. Passageways must be kept clean and free of material, equipment, and debris at all times. Flammable material must be removed from the job site daily because storage will not be permitted on the premises. Precaution must be exercised at all times to safeguard the welfare of JEFFERSON PARISH and the general public.

7. PUBLIC WORKS BIDS: All awards for public works in excess of $5,000.00 will be reduced to a formal contract which shall be recorded at the contractor's expense with the Clerk of Court and Ex-Officio Recorder of Mortgages for the Parish of Jefferson. A price list of recordation costs may be obtained from the Clerk of Court and Ex-Officio Recorder of Mortgages for the Parish of Jefferson. All awards in excess of $25,000.00 will require both a performance and a payment bond. Unless otherwise stated in the bid specifications, the performance bond requirements shall be 100% of the contract price. Unless otherwise state in the bid specifications, the payment bond requirements shall be 100% of the contract price. Both bonds shall be supplied at the signing of the contract.

8. NON-PUBLIC WORKS BIDS: A performance bond will be required for this bid. The amount of the bond will be 100% of the contract price unless otherwise indicated in the specifications. The performance bond shall be supplied at the signing of the contract.

9. NON-PUBLIC WORKS BIDS: A payment bond will be required for this bid. The amount of the bond will be 100% of the contract price unless otherwise indicated in the specifications. The payment bond shall be supplied at the signing of the contract.

10. All bidders must comply with the requirements stated in the attached "Standard Insurance Requirements" sheet attached to this bid solicitation. Failure to comply with this instruction will result in bid rejection.

11. A bid bond will be required with bid submission in the amount of 5% of the total bid, unless otherwise stated in the bid specifications. All sureties must be in original format (no copies) When submitting a bid online, vendors must submit an electronic bid bond through the respective online clearinghouse bond management system(s) as indicated in the electronic bid solicitation on Central Auction House. No scanned paper copies of any bid bond will be accepted as part of the electronic bid submission.

12. This is a requirements contract to be provided on an as needed basis. JEFFERSON PARISH makes no representations on warranties with regard to minimum guaranteed quantities unless otherwise stated in the bid specifications.

13. Freight charges should be included in total cost when quoting. If not quoted FOB DELIVERED, freight must be quoted as a separate item. Bid may be rejected if not quoted FOB DELIVERED or if freight charges are not indicated on bid form.

14. PUBLIC WORKS BIDS - Completed, Signed and Properly Notarized Affidavits Required; This applies to all solicitations for construction, alteration or demolition of public buildings or projects, in conformity with the provisions contained in LSA-RS 38:2212.9, LSA-RS 38:2212.10, LSA-RS 38:2224, and Sec 2-923.1 of the Jefferson Parish Code of Ordinances. For bidding purposes, all bidders must submit with bid submission COMPLETED, SIGNED and PROPERLY NOTARIZED Affidavits, including: Non-Conviction Affidavit, Non-Collusion Affidavit, Campaign Contribution Affidavit, Debt Disclosures Affidavit and E-Verify Affidavit. For the convenience of vendors, all affidavits have been combined into one form entitled PUBLIC WORKS BID AFFIDAVIT. This affidavit must be submitted in its original format, and without material alteration, in order to be compliant and for the bid to be considered responsive. A scanned copy of the completed, signed and properly notarized affidavit may be submitted with the bid, however, the successful bidder must submit the original affidavit in its original format and without material alteration upon contract execution. Failure to comply will result in the bid submission being rejected as non-responsive. The Parish reserves the right to award bid to the next lowest responsive and responsible bidder in this event.

INSTRUCTIONS FOR BIDDERS AND GENERAL CONDITIONS

15. NON PUBLIC WORK BIDS - Completed, Signed and Properly Notarized Affidavits Required in conformity with the provisions contained in LSA – RS 38:2224 and Sec 2-923.1 of the Jefferson Parish Code of Ordinances. For bidding purposes, all bidders must submit with bid submission COMPLETED, SIGNED and PROPERLY NOTARIZED Affidavits, including: Non-Collusion Affidavit, Debt Disclosures Affidavit and Campaign Contribution Affidavit. For the convenience of vendors, all affidavits have been combined into one form entitled NON PUBLIC WORKS BID AFFIDAVIT. This affidavit must be submitted in its original format, and without material alteration, in order to be compliant and for the bid to be considered responsive. A scanned copy of the completed, signed and properly notarized affidavit may be submitted with the bid, however, the successful bidder must submit the original affidavit in its original format and without material alteration upon contract execution. Failure to comply will result in the bid submission being rejected as non-responsive. The Parish reserves the right to award bid to the next lowest responsive and responsible bidder in this event.

16. The ensuing contract for this bid solicitation may be eligible for FEMA reimbursement and/or Federal funding/reimbursement. As such, the referenced appendix will be applicable accordingly and shall be considered a part of the bid documents. All applicable certifications must be duly completed, signed and submitted with bid submission. Failure to submit applicable certifications with bid submission will result in bid rejection.

17. For this project, the Contractor shall not pay any state or local sales or use taxes on materials and equipment which are affixed and made part of the immovable property of the project or which is permanently incorporated in the project (hereinafter referred to as "applicable materials and equipment."). All purchases of applicable materials or equipment shall be made by the contractor on behalf of and as the agent of Jefferson Parish (Owner), a political subdivision of the State of Louisiana. No state and local sales and use taxes are owed on applicable materials and equipment under the provisions of Act 1029 of the 1991 Regular Session - Louisiana Revised Statute 47:301(8)(c). Owner will furnish to contractor a certificate form which certifies that Owner is not required to pay such state or local sales and use taxes, and contractor shall furnish a copy of such certificate to all vendors or suppliers of the applicable materials and equipment, and report to Owner the amount of taxes not incurred.

It shall be the duty of every parish officer, employee, department, agency, special district, board, and commission: and the duty of every contractor, subcontractor, and licensee of the parish, and the duty of every applicant for certification of eligibility for a parish contract or program, to cooperate with the Inspector General in any investigation, audit, inspection, performance review, or hearing pursuant to JPCO 2-155.10(19). By signing this document, every corporation, partnership, or person contracting with PARISH, whether by cooperative endeavor, intergovernmental agreement, bid, proposal, application or solicitation for a parish contract, and every application for certification of eligibility for a parish contract or program, attests that it understands and will abide by all provisions of JPCO 2-155.10.

See Page 1 for Conflicts of Interest Statement

LOUISIANA UNIFORM PUBLIC WORK BID FORM

TO: JEFFERSON PARISH
PURCHASING DEPT
200 DERBIGNY ST. SUITE 4400
GRETNA, LA 70053
(Owner to provide name and address of owner)

BID FOR: TWO YEAR CONTRACT FOR EMERGENCY AND/OR REPLACEMENT OF TRAFFIC S DAMAGED AS A RESULT OF NATURAL OR OTHER STATE OF EMERGENCY FOR
(Owner to provide name of project and other identifying information)

The undersigned bidder hereby declares and represents that she/he; a) has carefully examined and understands the Bidding Documents, b) has not received, relied on, or based his bid on any verbal instructions contrary to the Bidding Documents or any addenda, c) has personally inspected and is familiar with the project site, and hereby proposes to provide all labor, materials, tools, appliances and facilities as required to perform, in a workmanlike manner, all work and services for the construction and completion of the referenced project, all in strict accordance with the Bidding Documents prepared by:_____ and dated:_____
(Owner to provide name of entity preparing bidding documents.)

Bidders must acknowledge all addenda. The Bidder acknowledges receipt of the following **ADDENDA**: (Enter the number the Designer has assigned to each of the addenda that the Bidder is acknowledging) _____

TOTAL BASE BID: For all work required by the Bidding Documents (including any and all unit prices designated "Base Bid" * but not alternates) the sum of:

_____ Dollars ($)_____

ALTERNATES: For any and all work required by the Bidding Documents for Alternates including any and all unit prices designated as alternates in the unit price description.

Alternate No. 1 (Owner to provide description of alternate and state whether add or deduct) for the lump sum of:

N/A Dollars ($)_____

Alternate No. 2 (Owner to provide description of alternate and state whether add or deduct) for the lump sum of:

N/A Dollars ($)_____

Alternate No. 3 (Owner to provide description of alternate and state whether add or deduct) for the lump sum of:

N/A Dollars ($)_____

NAME OF BIDDER: _____

ADDRESS OF BIDDER: _____

LOUISIANA CONTRACTOR'S LICENSE NUMBER:_____

NAME OF AUTHORIZED SIGNATORY OF BIDDER:_____

TITLE OF AUTHORIZED SIGNATORY OF BIDDER:_____

SIGNATURE OF AUTHORIZED SIGNATORY OF BIDDER **:_____

DATE: _____

THE FOLLOWING ITEMS ARE TO BE INCLUDED WITH THE SUBMISSION OF THIS LOUISIANA UNIFORM PUBLIC WORK BID FORM:

* The Unit Price Form shall be used if the contract includes unit prices. Otherwise it is not required and need not be included with the form. The number of unit prices that may be included is not limited and additional sheets may be included if needed.

** **A CORPORATE RESOLUTION OR WRITTEN EVIDENCE** of the authority of the person signing the bid for the public work as prescribed by LA-R.S. 38:2218 (B)(5).

BID SECURITY in the form of a bid bond, certified check or cashier's check as prescribed by LA-R.S. 38:2218.(A) is attached to and made a part of this bid.

LOUISIANA UNIFORM PUBLIC WORK BID FORM
UNIT PRICE FORM

Bid# 50-00141477

TO: JEFFERSON PARISH
PURCHASING DEPT
200 DERBIGNY ST. SUITE 4400
GRETNA, LA 70053
(Owner to provide name and address of owner)

TWO YEAR CONTRACT FOR EMERGENCY REPAIR AND/OR REPLACEMENT OF TRAFFIC SIGNALS DAMAGED AS A RESULT OF NATURAL DISASTER OR OTHER STATE OF EMERGENCY FOR WESTBANK
(Owner to provide name of project and other identifying information)

UNIT PRICES: This form shall be used for any and all work required by the Bidding Documents and described as unit prices. Amounts shall be stated in figures and only in figures.

DESCRIPTION:	[X] Base Bid [ ] Alt.#__	0010 GENERAL MAST ARM REALIGNMENT		
REF NO.	QUANTITY	UNIT OF MEASURE	UNIT PRICE	UNIT PRICE EXTENSION (Quantity times Unit Price)
001	200.00	EA		

DESCRIPTION:	[X] Base Bid [ ] Alt.#__	0020 SIGNAL HEAD INSTALLATION		
REF NO.	QUANTITY	UNIT OF MEASURE	UNIT PRICE	UNIT PRICE EXTENSION (Quantity times Unit Price)
002	200.00	EA		

DESCRIPTION:	[X] Base Bid [ ] Alt.#__	0030 SIGNAL HEAD REALIGNMENT		
REF NO.	QUANTITY	UNIT OF MEASURE	UNIT PRICE	UNIT PRICE EXTENSION (Quantity times Unit Price)
003	200.00	EA		

DESCRIPTION:	[X] Base Bid [ ] Alt.#__	0040 PILE SUPPORTED MAST ARM FOUNDATION INSTALLATION- 30 INCH DIAMETER		
REF NO.	QUANTITY	UNIT OF MEASURE	UNIT PRICE	UNIT PRICE EXTENSION (Quantity times Unit Price)
004	2.00	EA		

DESCRIPTION:	[X] Base Bid [ ] Alt.#__	0050 PILE SUPPORTED MAST ARM FOUNDATION INSTALLATION -36 INCH DIAMETER		
REF NO.	QUANTITY	UNIT OF MEASURE	UNIT PRICE	UNIT PRICE EXTENSION (Quantity times Unit Price)
005	2.00	EA		

DESCRIPTION:	[X] Base Bid [ ] Alt.#__	0060 CONTROLLER CABINET INSTALLATION		
REF NO.	QUANTITY	UNIT OF MEASURE	UNIT PRICE	UNIT PRICE EXTENSION (Quantity times Unit Price)
006	4.00	EA		

DESCRIPTION:	[X] Base Bid [ ] Alt.#__	0070 GUY WIRE SUPPORT SYSTEM INSTALLATION FOR MAST ARM FOUNDATION		
REF NO.	QUANTITY	UNIT OF MEASURE	UNIT PRICE	UNIT PRICE EXTENSION (Quantity times Unit Price)
007	4.00	EA		

DESCRIPTION:	[X] Base Bid [ ] Alt.#__	0080 ELECTRICAL SERVICE		
REF NO.	QUANTITY	UNIT OF MEASURE	UNIT PRICE	UNIT PRICE EXTENSION (Quantity times Unit Price)
008	4.00	EA		

Wording for "DESCRIPTION" is to be provided by the Owner.
All quantities are estimated. The contractor will be paid based upon actual quantities as verified by the Owner.

LOUISIANA UNIFORM PUBLIC WORK BID FORM
UNIT PRICE FORM

Bid# 50-00141477

TO: JEFFERSON PARISH
PURCHASING DEPT
200 DERBIGNY ST. SUITE 4400
GRETNA, LA 70053
(Owner to provide name and address of owner)

TWO YEAR CONTRACT FOR EMERGENCY REPAIR AND/OR REPLACEMENT OF TRAFFIC SIGNALS DAMAGED AS A RESULT OF NATURAL DISASTER OR OTHER STATE OF EMERGENCY FOR WESTBANK
(Owner to provide name of project and other identifying information)

UNIT PRICES: This form shall be used for any and all work required by the Bidding Documents and described as unit prices. Amounts shall be stated in figures and only in figures.

DESCRIPTION:	[X] Base Bid [ ] Alt.#__	0090 OVERHEAD SIGNAL SPAN WIRE SYSTEM		
REF NO.	QUANTITY	UNIT OF MEASURE	UNIT PRICE	UNIT PRICE EXTENSION (Quantity times Unit Price)
009	4.00	EA		

DESCRIPTION:	[X] Base Bid [ ] Alt.#__	0100 TRAFFIC SIGNAL MAST ARM ARM LENGTH- 25 FEET OR LESS		
REF NO.	QUANTITY	UNIT OF MEASURE	UNIT PRICE	UNIT PRICE EXTENSION (Quantity times Unit Price)
010	2.00	EA		

DESCRIPTION:	[X] Base Bid [ ] Alt.#__	0110 TRAFFIC SIGNAL MAST ARM ARM LENGTH- 30 OR 35 FEET		
REF NO.	QUANTITY	UNIT OF MEASURE	UNIT PRICE	UNIT PRICE EXTENSION (Quantity times Unit Price)
011	2.00	EA		

DESCRIPTION:	[X] Base Bid [ ] Alt.#__	0120 TRAFFIC SIGNAL MAST ARM ARM LENGTH- 40 OR 50 FEET		
REF NO.	QUANTITY	UNIT OF MEASURE	UNIT PRICE	UNIT PRICE EXTENSION (Quantity times Unit Price)
012	2.00	EA		

DESCRIPTION:	[X] Base Bid [ ] Alt.#__	0130 TRAFFIC SIGNAL PEDESTAL SHAFT		
REF NO.	QUANTITY	UNIT OF MEASURE	UNIT PRICE	UNIT PRICE EXTENSION (Quantity times Unit Price)
013	2.00	EA		

DESCRIPTION:	[X] Base Bid [ ] Alt.#__	0140 TRAFFIC SIGNAL STRAIN POLE		
REF NO.	QUANTITY	UNIT OF MEASURE	UNIT PRICE	UNIT PRICE EXTENSION (Quantity times Unit Price)
014	2.00	EA		

DESCRIPTION:	[X] Base Bid [ ] Alt.#__	0150 TRAFFIC DOUBLE MAST ARM PRIMARY AND SECONDARY ARM LENGTHS 20 FEET OR LESS		
REF NO.	QUANTITY	UNIT OF MEASURE	UNIT PRICE	UNIT PRICE EXTENSION (Quantity times Unit Price)
015	2.00	EA		

DESCRIPTION:	[X] Base Bid [ ] Alt.#__	0160 TRAFFIC SIGNAL DOUBLE MAST ARM PRIMARY ARM LENGTH- 25 OR 30 FEET; SECONDARY ARM LENGTH- 30 FEET OR LESS		
REF NO.	QUANTITY	UNIT OF MEASURE	UNIT PRICE	UNIT PRICE EXTENSION (Quantity times Unit Price)
016	2.00	EA		

Wording for "DESCRIPTION" is to be provided by the Owner.
All quantities are estimated. The contractor will be paid based upon actual quantities as verified by the Owner.

LOUISIANA UNIFORM PUBLIC WORK BID FORM
UNIT PRICE FORM

Bid# 50-00141477

TO: JEFFERSON PARISH
PURCHASING DEPT
200 DERBIGNY ST. SUITE 4400
GRETNA, LA 70053
(Owner to provide name and address of owner)

TWO YEAR CONTRACT FOR EMERGENCY REPAIR AND/OR REPLACEMENT OF TRAFFIC SIGNALS DAMAGED AS A RESULT OF NATURAL DISASTER OR OTHER STATE OF EMERGENCY FOR WESTBANK
(Owner to provide name of project and other identifying information)

UNIT PRICES: This form shall be used for any and all work required by the Bidding Documents and described as unit prices. Amounts shall be stated in figures and only in figures.

DESCRIPTION:	[X] Base Bid [ ] Alt.#__	0170 TRAFFIC SIGNAL DOUBLE MAST ARM PRIMARY ARM LENGTH- 35 FEET; SECONDARY ARM LENGTH- 35 FEET OR LESS		
REF NO.	QUANTITY	UNIT OF MEASURE	UNIT PRICE	UNIT PRICE EXTENSION (Quantity times Unit Price)
017	2.00	EA		

DESCRIPTION:	[X] Base Bid [ ] Alt.#__	0180 TRAFFIC SIGNAL DOUBLE MAST ARM PRIMARY ARM LENGTH- 40 OR 50 FEET; SECONDARY ARM LENGTH- 45 FEET OR LESS		
REF NO.	QUANTITY	UNIT OF MEASURE	UNIT PRICE	UNIT PRICE EXTENSION (Quantity times Unit Price)
018	2.00	EA		

DESCRIPTION:	[X] Base Bid [ ] Alt.#__	0190 TRAFFIC SIGNAL BASE		
REF NO.	QUANTITY	UNIT OF MEASURE	UNIT PRICE	UNIT PRICE EXTENSION (Quantity times Unit Price)
019	100.00	EA		

DESCRIPTION:	[X] Base Bid [ ] Alt.#__	0200 TRAFFIC SIGNAL CABLE		
REF NO.	QUANTITY	UNIT OF MEASURE	UNIT PRICE	UNIT PRICE EXTENSION (Quantity times Unit Price)
020	1,000.00	LF		

DESCRIPTION:	[ ] Base Bid [ ] Alt.#__			
REF NO.	QUANTITY	UNIT OF MEASURE	UNIT PRICE	UNIT PRICE EXTENSION (Quantity times Unit Price)

DESCRIPTION:	[ ] Base Bid [ ] Alt.#__			
REF NO.	QUANTITY	UNIT OF MEASURE	UNIT PRICE	UNIT PRICE EXTENSION (Quantity times Unit Price)

DESCRIPTION:	[ ] Base Bid [ ] Alt.#__			
REF NO.	QUANTITY	UNIT OF MEASURE	UNIT PRICE	UNIT PRICE EXTENSION (Quantity times Unit Price)

DESCRIPTION:	[ ] Base Bid [ ] Alt.#__			
REF NO.	QUANTITY	UNIT OF MEASURE	UNIT PRICE	UNIT PRICE EXTENSION (Quantity times Unit Price)

Wording for "DESCRIPTION" is to be provided by the Owner.
All quantities are estimated. The contractor will be paid based upon actual quantities as verified by the Owner.

CORPORATE RESOLUTION

EXCERPT FROM MINUTES OF MEETING OF THE BOARD OF DIRECTORS OF

_____

INCORPORATED.

AT THE MEETING OF DIRECTORS OF _____
INCORPORATED, DULY NOTICED AND HELD ON _____,
A QUORUM BEING THERE PRESENT, ON MOTION DULY MADE AND SECONDED. IT WAS:

RESOLVED THAT _____, BE AND IS HEREBY APPOINTED, CONSTITUTED AND DESIGNATED AS AGENT AND ATTORNEY-IN-FACT OF THE CORPORATION WITH FULL POWER AND AUTHORITY TO ACT ON BEHALF OF THIS CORPORATION IN ALL NEGOTIATIONS, BIDDING, CONCERNS AND TRANSACTIONS WITH THE PARISH OF JEFFERSON OR ANY OF ITS AGENCIES, DEPARTMENTS, EMPLOYEES OR AGENTS, INCLUDING BUT NOT LIMITED TO, THE EXECUTION OF ALL BIDS, PAPERS, DOCUMENTS, AFFIDAVITS, BONDS, SURETIES, CONTRACTS AND ACTS AND TO RECEIVE ALL PURCHASE ORDERS AND NOTICES ISSUED PURSUANT TO THE PROVISIONS OF ANY SUCH BID OR CONTRACT, THIS CORPORATION HEREBY RATIFYING, APPROVING, CONFIRMING, AND ACCEPTING EACH AND EVERY SUCH ACT PERFORMED BY SAID AGENT AND ATTORNEY-IN-FACT.

I HEREBY CERTIFY THE FOREGOING TO BE A TRUE AND CORRECT COPY OF AN EXCERPT OF THE MINUTES OF THE ABOVE DATED MEETING OF THE BOARD OF DIRECTORS OF SAID CORPORATION, AND THE SAME HAS NOT BEEN REVOKED OR RESCINDED.

_____

SECRETARY-TREASURER

_____

DATE

Public Works Bid
Affidavit Instructions

- **Affidavit is supplied as a courtesy to Affiants, but it is the responsibility of the affiant to insure the affidavit they submit to Jefferson Parish complies, in both form and content, with federal, state and parish laws.**
- **Affidavit must be signed by an authorized representative of the entity or the affidavit will not be accepted.**
- **Affidavit must be notarized or the affidavit will not be accepted.**
- **Notary must sign name, print name, and include bar/notary number, or the affidavit will not be accepted.**
- **Affiant MUST select either A or B when required or the affidavit will not be accepted.**
- **Affiants who select choice A must include an attachment or the affidavit will not be accepted.**
- **If both choice A and B are selected, the affidavit will not be accepted.**
- **Affidavit marked N/A will not be accepted.**
- **It is the responsibility of the Affiant to submit a new affidavit if any additional campaign contributions are made after the affidavit is executed but prior to the time the council acts on the matter.**

Instruction sheet may be omitted when submitting the affidavit

Public Works Bid

AFFIDAVIT

STATE OF _____

PARISH/COUNTY OF _____

BEFORE ME, the undersigned authority, personally came and appeared: _____ _____, (Affiant) who after being by me duly sworn, deposed and said that he/she is the fully authorized _____ of _____ (Entity), the party who submitted a bid in response to Bid Number _____, to the Parish of Jefferson.

Affiant further said:

Campaign Contribution Disclosures

(Choose A or B, if option A is indicated please include the required attachment):

Choice A _____ Attached hereto is a list of all campaign contributions, including the date and amount of each contribution, made to current or former elected officials of the Parish of Jefferson by Entity, Affiant, and/or officers, directors and owners, including employees, owning 25% or more of the Entity during the two-year period immediately preceding the date of this affidavit or the current term of the elected official, whichever is greater. Further, Entity, Affiant, and/or Entity Owners have not made any contributions to or in support of current or former members of the Jefferson Parish Council or the Jefferson Parish President through or in the name of another person or legal entity, either directly or indirectly.

Choice B _____ there are **NO** campaign contributions made which would require disclosure under Choice A of this section.

Affiant further said:

Debt Disclosures

(Choose A <u>or</u> B, if option A is indicated please include the required attachment):

Choice A _____ Attached hereto is a list of all debts owed by the affiant to any elected or appointed official of the Parish of Jefferson, and any and all debts owed by any elected or appointed official of the parish to the Affiant.

Choice B _____ There are **<u>NO</u>** debts which would require disclosure under Choice A of this section.

Affiant further said:

That Affiant has employed no person, corporation, firm, association, or other organization, either directly or indirectly, to secure the public contract under which he received payment, other than persons regularly employed by the Affiant whose services in connection with the construction, alteration or demolition of the public building or project or in securing the public contract were in the regular course of their duties for Affiant; and

That no part of the contract price received by Affiant was paid or will be paid to any person, corporation, firm, association, or other organization for soliciting the contract, other than the payment of their normal compensation to persons regularly employed by the Affiant whose services in connection with the construction, alteration or demolition of the public building or project were in the regular course of their duties for Affiant.

Affiant further said:

Affiant personally has not been convicted of, nor has he/she entered into a plea of guilty or nolo contendere to any of the crimes or equivalent federal crimes listed below. No individual partner, incorporator, director, manager, officer, organizer, or member, who has a minimum of a ten percent ownership in the Bidding Entity, has been convicted of, or has entered a plea of guilty or nolo contendere to any of the crimes or equivalent federal crimes listed below. A conviction of or plea of guilty or nolo contendere to the following state crimes or equivalent federal crimes shall permanently bar any person or the bidding entity from bidding on public projects:

(a) Public bribery (R.S. 14:118)
(b) Corrupt influencing (R.S. 14:120)
(c) Extortion (R.S. 14:66)
(d) Money laundering (R.S. 14:230)

A conviction of or plea of guilty or nolo contendere to the following state crimes or equivalent federal crimes shall bar any person or the bidding entity from bidding on public projects for a period of five years from the date of conviction or from the date of the entrance of the plea of guilty or nolo contendere:

(a) Theft (R.S. 14:67)
(b) Identity Theft (R.S. 14:67, 16)
(c) Theft of a business record (R.S. 14:67.20)
(d) False accounting (R.S. 14:70)
(e) Issuing worthless checks (R.S. 14:71)
(f) Bank fraud (R.S. 14:71.1)
(g) Forgery (R.S. 14:72)
(h) Contractors; misapplication of payments (R.S. 14:202)
(i) Malfeasance in office (R.S. 14:134)

The five-year prohibition provided for in this section shall apply only if the crime was committed during the solicitation or execution of a contract or bid awarded pursuant to these provisions. If evidence is submitted substantiating that a false attestation has been made and the project must be readvertised or the contract cancelled, the awarded entity making the false attestation shall be responsible to the public entity for the costs of rebidding, additional costs due to increased costs of bids and any and all delay costs due to the rebid or cancellation of this project.

[*The remainder of this page is intentionally left blank.*]

Affiant further said:

(1) Entity is registered and participates in a status verification system to verify that all employees in the State of Louisiana are legal citizens of the United States or are legal aliens.

(2) Entity shall continue, during the term of the contract, to utilize a status verification system to verify the legal status of all new employees in the State of Louisiana.

(3) Entity shall require all subcontractors to submit to the Entity a sworn affidavit verifying compliance with statements (1) and (2).

_____
Signature of Affiant

_____
Printed Name of Affiant

SWORN AND SUBSCRIBED TO BEFORE ME
ON THE _____ DAY OF _____, 20___.

_____
Notary Public

_____
Printed Name of Notary

_____
Notary/Bar Roll Number

My commission expires _____.

R-1020 (4/12)

LDR
Contributing to a better quality of life

Designation of Construction Contractor as Agent of a Governmental Entity Sales Tax Exemption Certificate

_____, an agency of the United
Legal Name of Governmental Entity

States government, or an agency, board, commission, or instrumentality of the State of Louisiana or its political subdivisions, including parishes, municipalities and school boards, does hereby designate the following contractor as its agent for the purpose of making sales tax exempt purchases on behalf of the governmental body:

Name of Contractor		
Address		
City	State	ZIP

This designation of agency shall be effective for purchases of component construction materials, taxable services and leases and rentals of tangible personal property for the following named construction project:

Construction Project	Contract Number

This designation and acceptance of agency is effective for the period

Beginning Date *(mm/dd/yyyy)*	End Date *(mm/dd/yyyy)*

Purchases for the named project during this period by the designated contractor shall be considered as the legal equivalent of purchases directly by the governmental body. Any materials purchased by this agent shall immediately, upon the vendor's delivery to the agent, become the property of this government entity. This government entity, as principal, assumes direct liability to the vendor for the payment of any property, services, leases, or rentals made by this designated agent. This agreement does not void or supersede the obligations of any party created under any construction contract related to this project, including specifically any contractual obligation of the construction contractor to submit payment to the vendors of materials or services for the project.

This contractor-agent is not authorized to delegate this purchasing agency to others; separate designations of agency by this governmental entity are required for each contractor or sub-contractor who is to purchase on behalf of this governmental entity. The undersigned hereby certify that this designation is the entirety of the agency designation agreement between them. In order for a purchase for an eligible governmental entity through a designated agent to be eligible for sales tax exemption, the designation of agency must be made, accepted, and disclosed to the vendor before or at the time of the purchase transaction.

Designation of Agency		
Signature of Authorized Designator		Date *(mm/dd/yyyy)*
Name of Authorized Designator		
Name of Governmental Entity		
Address		
City	State	ZIP

Acceptance of Agency		
Signature of Contractor or Subcontractor Authorized Acceptor		Date *(mm/dd/yyyy)*
Name of Contractor's or Subcontractor's Acceptor		
Name of Contractor		
Address		
City	State	ZIP

This designation of agency form, when properly executed by both the contractor and the governmental entity, shall serve as evidence of the sales tax exempt status that has been conferred onto the contractor. No other exemption certificate form is necessary to claim exemption from sales taxes. The agency agreement evidenced by this sales tax exemption certificate must be implemented at the time of contract execution with the governmental entity. The contract between the governmental entity and his agent must contain provisions to authenticate the conferment of agency.