Jefferson Parish
State of Louisiana

Bid Number 50–00138079

Two Year Contract for a Supply of Reflective Sheeting for the Jefferson Parish Traffic Engineering Division.

BID DUE: May 12, 2022 AT 2:00 PM

ATTENTION VENDORS!!!

Please review all pages and respond accordingly, complying with all provisions in the technical specifications and Jefferson Parish Instructions for Bidders and General Terms and Conditions. All bids must be received on the Purchasing Department's eProcurement site, www.jeffparishbids.net, by the bid due date and time. Late bids will not be accepted.

Jefferson Parish Purchasing Department
200 Derbigny Street
General Government Building, Suite 4400
Gretna, LA 70053
Donna Reamey
Email: Dreamey@jeffparish.net
Phone: 504-364-2684

Diamond Grade Reflective Sheeting Series 4000

1 Description

Diamond Grade Reflective Sheeting Series 4000 ("Sheeting") features the most efficient retroreflective prism design currently available for use on vertical traffic control signs and delineators to return light to drivers under a diverse set of nighttime viewing geometries encountered by the driving public. Sheeting must meet the stringent retroreflective requirements described in the ASTM D4956 standard for Type XI retroreflective Sheeting.

The Sheeting is available in the following colors.

Table 1. Product Codes by Color

Color	Product Code
White	4090
Yellow	4091
Red	4092
Blue	4095
Green	4097
Brown	4099
Fluorescent Yellow - FY	4081
Fluorescent Yellow-Green - FYG	4083
Fluorescent Orange - FO	4084

2 Specifications

The Sheeting conforms to all current performance requirements of ASTM D4956 for Type XI retroreflective sheeting. Additionally, the Sheeting meets the following specifications.

2.1 Legibility

A traffic control and guidance sign ("Sign") made with the Sheeting used for both Sign background and cutout copy will remain legible when viewed from a moving vehicle under normal day and night driving conditions by not excessively fading, discoloring, cracking, crazing, peeling, and blistering during the legibility periods in the locations as given in Table 2. Legibility Period is measured from the initial Sign fabrication date ("Fabrication Date"), and varies by Sign location as shown in Table 2.

Table 2. Sheeting Legibility Periods by Sheeting and Geographical Sign Location

Sheeting	Geographic Location of Sign	Legibility Period [from Fabrication Date]
4090, 4091, 4092, 4095, 4097, 4099	US & Canada	Up to 12 Years
4081, 4083	Alabama, Arizona, Florida, Georgia, Hawaii, Louisiana, Mississippi, New Mexico, South Carolina, and Texas	Up to 7 Years
	Canada and US other than the above States	Up to 10 Years
4084	US & Canada	Up to 3 Years

2.2 Gloss

The Sheeting has a rating of 50 or higher when tested in accordance with ASTM D523 using a 60º glossmeter.

2.3 Optical Stability

The Sheeting, applied to a 3-inch x 6-inch test panel, shall retain a minimum of 85% and a maximum of 115% of its initial coefficient of retroreflection when measured at a 0.2º observation and -4º entrance angle, after being placed in an oven at 71 ± 3 ºC (160 ± 5 ºF) for 24 hours followed by conditioning at standard room temperature for two hours.

2.4 Coefficient of Retroreflection (RA)

Table 3 describes the durations and coefficients of retained retroreflection1 for Signs fabricated with the Sheeting for use in the US and Canada. The values presented in Table 3 apply only to Sheeting that has been applied, processed, installed, maintained, and cleaned.

Table 3. Minimum Retained coefficient of retroreflection (RA, [cd/lx/m2]) for Sheeting over time

Sheeting	Years from Fabrication Date	Minimum Retained Coefficient of Retroreflection [cd/lx/m^2]
4090, 4091, 4092, 4095, 4097, 4099	On Fabrication Date	ASTM D4956 Type XI
	Up to 7 Years	80% of ASTM D4956 Type XI
	8-12 Years	70% ASTM D4956 Type XI
4081, 4083	On Fabrication Date	ASTM D4956 Type XI
	Up to 7 Years/10 Years[a]	70% of ASTM D4956 Type XI
4084	On Fabrication Date	ASTM D4956 Type XI
	Up to 3 Years	70% of ASTM D4956 Type XI

The retained coefficient of retroreflection applies for 7 years after Fabrication Date for the following states: Alabama, Arizona, Florida, Georgia, Hawaii, Louisiana, Mississippi, New Mexico, South Carolina, and Texas. For all other locations the retained coefficient of retroreflection is for 10 years.

Conformance to coefficient of retroreflection requirements shall be determined instrumentally in accordance with ASTM E810 "Test Method for Coefficient of Retroreflection of Retroreflective Sheeting," and per E810, values obtained at 0º and 90º rotations shall be averaged to determine the RA values referenced in Table 3.

2.5 Entrance Angularity Performance and Orientation

Sheeting has been designed to be an effective wide angle reflective Sheeting regardless of its orientation on the substrate or the ultimate orientation of the Sign after installation. However, because the efficiency of light return from cube corner reflectors is not equal at all application orientations, which is especially apparent at larger entrance angles, it is possible to get the widest entrance angle light return from a particular orientation. When high entrance angle (>50º) performance is required for a given Sign (e.g. "keep right" symbols), it can be obtained easily by properly orientating the Sheeting on the completed Sign. In such situations, the completed Sign should have the Sheeting positioned at the 0º orientation (downweb direction perpendicular to the road). When the flat side of the diamond (direction of diamond chain links) is vertical in the completed Sign, Sheeting is said to be at a 0º orientation. When the "primary groove line" (or, flat side of the diamond shape) is horizontal on the completed Sign, the Sheeting is said to be at a 90º orientation. See Figure 1 for details.

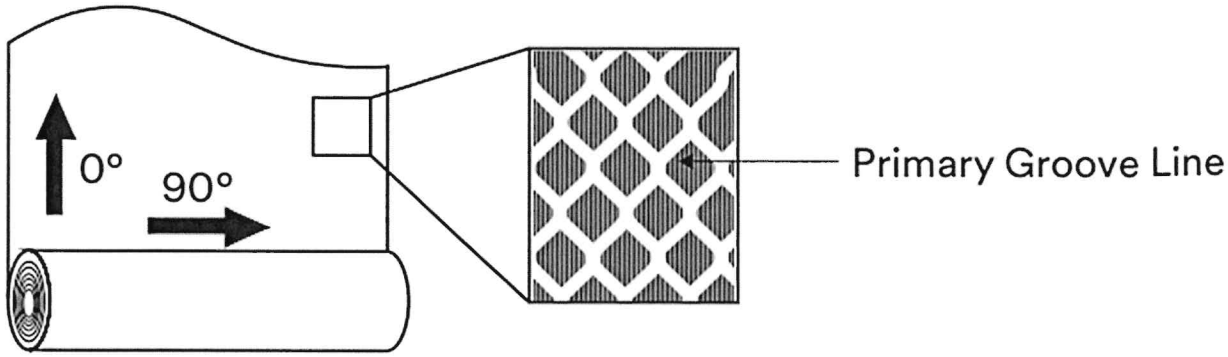

Figure 1. Primary groove line.

Unless Sign location and/or position calls for extra-wide entrance angularity performance or a specific installation direction is required in a customer specification, Signs and applied copy (letters, arrows, borders, and shields) can be fabricated and installed using the application orientation that most efficiently utilizes the reflective Sheeting.

Note: For multi-panel Signs, it is recommended that all background panels be sheeted such that the Sheeting direction is the same for all panels.

3 System of Matched Components
The Sheeting is compatible with a wide range of screen print and digital inks, translucent films, overlay films and other processing components.

4 Physical Properties
4.1 Fabrication Lines
The Sheeting manufacturing process results in periodic fabrication lines in the product, as illustrated in Figure 2. Fabrication lines may be noticeable in shop light but do not impact Sign functionality on the road, either in daylight or at night, under typical use conditions.

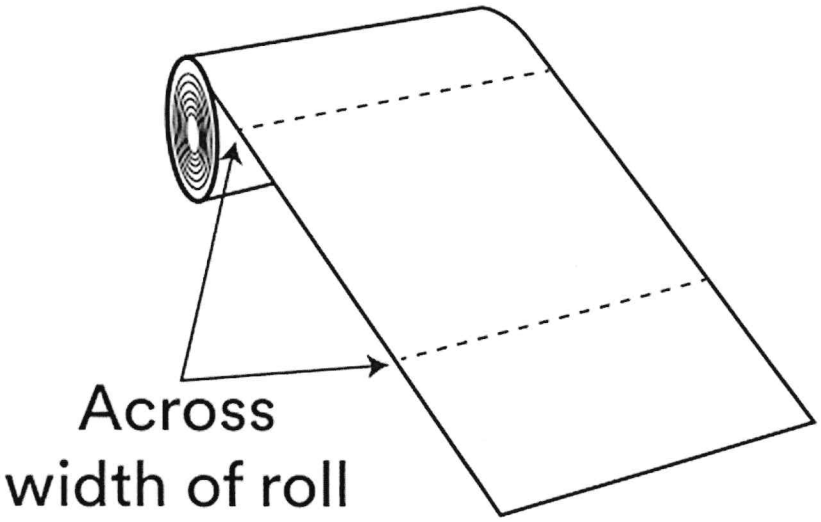

Figure 2. Fabrication lines

4.2 Adhesive
Sheeting comes with a pressure-sensitive adhesive that is recommended for application at temperatures of 65 ºF (18 ºC) and higher.

5 Sign Fabrication Methods
5.1 Application
Sheeting should be applied to Sign substrates at temperature of 65 ºF (18 ºC) and higher using any of the following methods:

Mechanical squeeze roll applicator - Applications to extrusions that are edge wrapped require sufficient softening of Sheeting. This can be accomplished by directing additional heat to the "next to last" edge roller. This practice may increase productivity and minimize cracking.

Application of Sheeting for complete Signs or backgrounds must be done using a roll laminator, either mechanical or hand driven.

5.2 Hand Application
Hand application is recommended for legend and copy only.

Hand applications will show some visual irregularities which may be objectionable to aesthetically critical customers. These irregularities are more noticeable on darker colors. To obtain a uniform close-up appearance, a roll laminator must be used.

All direct applied copy and border MUST be cut and squeegeed at all metal joints.

5.3 Splices
Sheeting must be butt spliced when more than one piece of Sheeting is used on a single piece of substrate. Sheeting pieces should not touch one another. This is to prevent the buckling that can occur as Sheeting expands under extreme temperature and humidity conditions.

5.4 Double Faced Signs
The Sheeting on the bottom side of a double faced Sign can be damaged if rolled through a squeeze roll applicator with an unprotected steel bottom roller. The use of a semi-soft flat sheet between the steel roller and the applied Sign face will provide protection from damage. A material such as a rubber mat, tag board, or cardboard is recommended.

6 Substrates
For traffic Sign use, the substrates found to be most reliable and durable are properly prepared aluminum sheets and extrusions. Users are urged to carefully evaluate adhesion and Sign durability properties of all other substrates. Other substrates suitable for secure and durable applications of Sheeting have the following characteristics:

- Clean
- Smooth
- Flat
- Rigid

- Dimensionally stable
- Weather resistant
- Non-porous
- High surface energy (pass water break test)

Substrates with low surface energies may require additional preparation steps, such as flame treatment, mechanical abrasion, or use of adhesion promoters prior to Sheeting application. Guide Sign extrusions may be edge wrapped. Flat panels and unwrapped extrusions must be carefully trimmed so that Sheeting sections on adjacent panels do not touch on assembled Signs.

Sheeting is designed primarily for application to flat substrates. Any application to a substrate with a radius of curvature of less than five inches should also be supported by rivets or bolts.

7 Imaging
Diamond Grade prismatic Sheeting may be processed into traffic Signs using any of the imaging methods described below.

7.1 Digital Imaging
Sheeting is compatible with the HP Latex 360/365 printers in combination with HP 831/HP 871 Latex inks. This compatibility is backed with a warranty when printing guidelines are followed and ElectroCut Film 1170C Clear is applied over the finished graphics.

7.2 Screen Processing
Sheeting may be screen processed into traffic Signs using Process Colors Series 880I or Series 880N before or after mounting onto Sign substrates. Series 880I and 880N process colors can be screened at temperatures of 60-100 ºF (16-38 ºC) and at relative humidities of 20-50%. A P.E. 157 screen mesh with a fill pass is recommended. Clear coating is neither required nor recommended. Use of process colors series other than 880I or 880N is not recommended.

7.3 ElectroCut Film
ElectroCut Film Series 1170 may be used on Sheeting to provide transparent colored background copy for traffic control Signs.

7.4 Applying Cut-Out Copy
Diamond Grade Prismatic Sheeting cut-out copy may be applied to sheeting backgrounds to create Sign legends. Such cut-out copy may be applied directly to the background sheeting or in a demountable form. Direct applied copy must be cut at all panel seams and carefully trimmed back so that the Sheeting sections of adjacent panels do not touch one another on assembled Signs.

8 Cutting
Sheeting may be cut into letters and shapes with heights of at least 3 inches and stroke widths of at least ½ inch. Smaller sizes are not recommended. Sealing the cut edges of Sheeting is not required.

8.1 Plotter Cutting
Programmable knife cut (electronic cutting):

1. Flat bed plotters can be used to either die cut or kiss cut Sheeting and offer the most consistent and reliable performance.

2. Friction fed plotters can be used to kiss cut only. This is achieved using 600 grams of down force and a 60º cutting blade. Additional drive wheels may be needed to improve tracking. Alternatively, Sheeting can be cut from the liner side. To do so, the blade force and knife depth must be set to score, but not cut through, the topfilm. After scoring, break apart individual copy or apply premask to retain spacing.

8.2 Other Cutting Methods
Sheeting may be hand cut or die cut one sheet at a time, and band sawed or guillotined in stacks. Cutting equipment such as guillotines and metal shears, which place pressure plates on the Sheeting when cutting, may damage the optics. Padding the pressure plate and easing it down onto the sheets being cut will significantly reduce damage. Maximum stack height for cutting Sheeting is 1 ½ inches, or 50 sheets.

9 Processing, Storage, and Packaging
Sheeting should be stored in a cool, dry area, preferably at 65-75 ºF (18-24 ºC) and 30-50% relative humidity, and applied within two years of date of manufacture. Rolls should be stored horizontally in their shipping cartons. Partially used rolls should be returned to their shipping cartons or suspended horizontally from rods or pipes through their cores. Unprocessed sheets should be stored flat. Finished Signs and applied blanks should be stored on edge.

Avoid banding, crating, or stacking Signs. Package for shipment in accordance with commercially accepted standards to prevent movement and chafing. Store Sign packages indoors on edges.

Panels and finished Signs must remain dry during shipment and storage. If packaged Signs become wet, unpack immediately and allow Signs to dry.

10 Installation
Nylon washers are required when twist style fasteners are used to mount Signs.

11 Cleaning
Signs that require cleaning should be flushed with water, then washed with a detergent solution and soft bristle brush or sponge. Avoid pressure that may damage Sign faces. Flush with water following washing. Do not use solvents to clean Signs.

12 Durability
The durability of the Sheeting will depend upon substrate selection and preparation, compliance with recommended application procedures, geographic area, exposure conditions, and maintenance. Maximum durability can be expected in applications subject to vertical exposure on stationary objects, when processed and applied to aluminum substrates prepared according to the manufacturer recommendations. The user must determine the suitability of any nonmetallic Sign backing for its intended use. Sign failures caused by substrate failures or improper surface preparations are not the responsibility of product provider. Application to unprimed, excessively rough or non-weather resistant surfaces, or exposure to severe or unusual conditions can shorten the performance lifetime of Sheeting. Signs that are in mountainous areas and covered by snow for prolonged periods may also have reduced durabilities. Atmospheric conditions in certain geographic areas may result in reduced durability.

Periodic Sign inspection and regular Sign replacement are strongly recommended in order to help Sign owners establish their own effective service life expectations.

13 Health and Safety Information

All health hazard, precautionary, and first aid statements found in the Safety Data Sheets (SDS), Article Information Sheets, and product labels of any materials for important health, safety, and environmental information shall be available upon request.

14 Warranty Information

14.1 Warranty

Contractor warrants to the manufacturer of the Sign ("Sign Manufacturer") that the Sheeting will meet the specifications described herein.

14.2 Warranty Terms and Conditions

- The Sheeting must be stored, processed, applied, and maintained as described in these specifications.
- A failure to meet the Warranty must be solely the result of design or manufacturing defect in the Sheeting, and not a result of (a) outside causes, including improper fabrication, handling, packing, storing, shipping, maintenance, or installation; (b) non-vertical applications where the Sign is more than +/- 10° from vertical; (c) use of any material or product not recommended by the manufacturer; (d) use of application equipment not recommended by the manufacturer; (e) failure of Sign substrate; (f) loss of adhesion due to incompatible or improperly prepared substrate; (g) exposure to chemicals, abrasion, or other mechanical damage; (h) snow burial or any other Sign burial; (i) collisions, vandalism, or malicious mischief; or (j) an act of God.
- Claims made under this warranty will be honored only if (a) the Sign is dated with the Fabrication Date using a permanent method (sticker, marker, metal stamp, etc.), (b) Contractor is notified in writing of the claim within thirty days of discovery, (c) Contractor is provided with the information reasonably required to validate the claim, and (d) Contractor is permitted to verify the cause of the failure.

14.4 Exclusive Limited Remedy

Valid claims under the Warranty will receive either the Sign Restoration or Materials Replacement as detailed in Table 4.

Table 4. Sheeting type, location, and type of limited remedy as a function of the age of Sign

Sheeting Type	Geographic Location of Sign	Limited Remedy Period [years from Fabrication Date]	
		Sign Restoration	Materials Replacement
4090, 4091, 4092, 4095, 4097, 4099	US & Canada	Up to 7 Years	Years 8-12
4081, 4083	Alabama, Arizona, Florida, Georgia, Hawaii, Louisiana, Mississippi, New Mexico, South Carolina, and Texas	Up to 5 Years	Years 6-7
	Canada and US other than the above States	Up to 7 Years	Years 8-10
4084	US & Canada	---	Years 0-3

Sign Restoration

During the Sign Restoration period as provided in Table 4, if Sheeting is proven to not meet the Warranty, then the Sign Manufacturer's exclusive remedy, and the Contractor's sole obligation, at the

Contractor's option, shall be that the Contractor, at its expense, will either refund the Sign Manufacturer's total original cost of the Sign, or refabricate the Sign, including (i) Sheeting and (ii) the aluminum Sign substrate (as needed). However, the Contractor will not provide other hardware or labor to install the replacement Sign. The Fabrication Date of the replacement Sign will be considered to be the original Fabrication Date of the Sign it replaces under this Warranty.

Materials Replacement
During the Materials Replacement period as provided in Table 4, if Sheeting is proven to not meet the Warranty, then the Sign Manufacturer's exclusive remedy, and the Contractor's sole obligation, at the Contractor's option, shall be that the Contractor, at its expense, will either refund the Sign Manufacturer's total original cost of the Sheeting, or provide the necessary Sheeting quantity to restore the Sign's surface. The Contractor will not provide the substrate or any labor to refabricate or reinstall the Sign.

ElectroCut Film Series 1170

Description
ElectroCut Film Series 1170 is a durable, transparent, acrylic film coated with a transparent, pressure sensitive adhesive that is protected by a removable liner, available in the colors in Table 1.

Table 1. Product Codes by Color

Color	Product Code
Clear	1170C
Yellow	1171
Red	1172
Orange	1174
Blue	1175
Worboy Green*	1176
Green	1177
Black (Opaque)	1178
Brown	1179

*Standard green color for U.K., Australia, and New Zealand

Series 1170 is intended for use on Reflective Sheeting as part of a system of matched components for signing. Series 1170 has a clear pressure-sensitive adhesive compatible with all the following reflective sheetings used in permanent signing:

Advanced Engineer Grade Prismatic Series 7930
Engineer Grade Prismatic Series 3430
Engineer Grade Series 3290
High Intensity Prismatic Series 3930 and 3930TT
Diamond Grade Series 3990 and 3990TT
Diamond Grade DG3 Series 4000 and 4000TT
Diamond Grade Translucent Reflective Sheeting 4090T

ElectroCut Film 1170C Clear must be used with the following reflective sheetings:
Diamond Grade Prismatic Digital Sheeting 4090DS (White)
High Intensity Prismatic Digital Sheeting 3930DS (White)

Series 1170 is designed with a special film liner for kiss-cutting on electronic cutting machines. Rolls are available prepunched for sprocket fed cutters or unpunched for flatbed or friction fed cutters. The colored films in the Series 1170 are often used instead of silk screened inks to provide transparent colored background copy for retroreflective street name signs and other traffic control signs. Various film widths are available to fabricate single sign panels up to 48 inches wide. For single panel signs requiring more than a single piece of sheeting or for multipanel signs such as guide signs. For best color uniformity on a colored multipanel sign, all panels must be made from the same lot of Series 1170.

Properties

Transparent clear, yellow, red, orange, blue, worboy green, green, black (opaque), and brown versions of the Series 1170 applied to compatible retroreflective sheetings listed in the above section can be expected to provide performance comparable to the integrally colored version of the same reflective sheeting. The coefficient of retroreflection of a white sheeting overlaid with the Series 1170 depends primarily on the overlay film transparency and the coefficient of retroreflection of the white base sheeting. Series 1170 applied on the compatible microprismatic retroreflective sheetings listed in the above section according to these specification recommendations will yield chromaticity values within the chromaticity limits given in ASTM D4956-16.

Table 1 gives the resultant minimum and maximum coefficient of retroreflection (RA) values for each transparent Series 1170 film as a percentage of the RA of the white reflective base sheeting on which it is applied.

Table 2. Coefficient of retroreflection* (RA) after application of colored film Series 1170 versus the RA of the white base sheeting (expressed as %)

Film	Minimum (% of base sheeting)	Maximum (% of base sheeting)
1171 (Yellow)	60	80
1172 (Red)	14	24
1174 (Orange)	30	--
1175 (Blue)	6.5	20
1176 (Worboy Green)	8	14
1177 (Green)	13	20
1179 (Brown)	5	--

*R_A measurements shall be made at 0.2°observation angle, -4° entrance angle, and 0° rotation, per ASTM E810.

Film Liner

Series 1170 films have a transparent film release liner designed to aid the cutting process and the removal of the film weed after cutting.

Storage
Store in a cool, dry area 65-75° F (18-24° C), 30-50% relative humidity, and use within one year from date of receipt.

Fabrication – Cutting and Application Procedures
Important Note: Read and follow the manufacturer's operating manual carefully for proper use of cutting equipment.

1. Adjust knife pressure to cut cleanly through the film and slightly score the liner. A 30° blade works best.
2. A clean cutting blade is required. To remove adhesive build-up use a soft cloth dampened with mineral spirits, isopropyl alcohol or Citrus Base Cleaner.
3. Avoid excessive flexing when handling film as this may cause film to release from the liner.
4. After cutting is complete, lay sheets flat, face to face, back to back. Always store sheets in this manner until the sheeting has been weeded and transfer tape has been applied to sheeting.
5. Use a stripping tool designed for weeding films that has a blunt (not a sharp) edge.
6. After weeding is completed, also store sheets flat, face to face and back to back, until transfer tape is applied.
7. **TPM-5 Clear Transfer Tape** is recommended for best results. SCPM-3 Application Tape is also satisfactory for use on small signs. Other transfer tapes are not recommended.
8. Transfer tape can be applied either by hand using a plastic squeegee or through a hand squeeze roll applicator (HSRA). If applying the transfer tape by hand, care must be taken to always squeegee from the center to the outside in both directions. If applying the transfer tape through the HSRA the air pressure must be at 30 psi to avoid stretching the premask during application, and the "lead" edge must be cut square and fed into the nip very carefully to avoid wrinkles in the Series 1170.
9. Film Series 1170 may be applied to the sheeting either before or after the sheeting has been applied to the substrate. Use of an HSRA is recommended to ensure satisfactory results. Use the "split liner method" – start in the middle of the sheet and remove half the liner to ensure proper alignment.
10. After film Series 1170 and sheeting have been applied, remove the transfer tape by carefully removing the tape at as low an angle as possible.
11. IMPORTANT! When the transfer tape has been removed, reroll the sign through the laminator to ensure good adhesion.
12. Excess or overhanging film Series 1170 should be trimmed using a sharp utility knife held at a 30° angle with the substrate.

Health and Safety Information
All health hazard, precautionary, and first aid statements found in the Safety Data Sheets (SDS), Article Information Sheets, and product labels of any materials for important health, safety, and environmental information shall be available upon request.

Warranty
Electronic Film Manufacturer's Replacement Obligation
Where it can be shown that retroreflective traffic signs with electronic cuttable film supplied and used according to the film manufacturer's recommendations have not met the performance requirements of these specifications, the film manufacturer shall cover restoration costs as provided in these specifications for the retroreflective sheeting when screen processed.

Clear Transfer Tape TPM524

Scope
This section covers Clear Transfer Tape, (3M TPM-5 or approved equal) designed to apply pre-spaced legends onto High Intensity Prismatic Sheeting.

Description
The Transfer Tape shall be clear, colorless film. The Transfer Tape shall resist stretching, wrinkling and air entrapment during hand application. The tape shall have adequate stiffness for handling of marking (4 sq. ft. or larger), intricate sign markings and for applications performed at high temperatures.

Adhesive
The overlay film shall have a pressure sensitive, transparent adhesive.

Application
The overlay film shall be applied to smooth, clean reflective sign surfaces when air and surface temperatures are above 60° (16° C). The Transfer Tape shall be applied using hand squeegee application.

Packaging and Storage
When supplied as roll goods, the overlay film shall be of good appearance, free from ragged edges, cracks and extraneous materials. The film shall be packed snugly in corrugated fiberboard cartons, in accordance with commercially accepted standards. Stored under normal conditions, the overlay film as furnished shall be suitable for use for minimum period of one (1) year.

Performance Requirements and obligations
Certification
The film manufacturer shall submit with each lot or shipment, a certification which states that the material supplied will meet all of the requirements listed above.

Engineer Grade Reflective Sheeting Series 3200

Description
Engineer Grade Series 3200
Engineer Grade Reflective Sheeting Series 3200 meets ASTM D4956 Type I and is an enclosed lens, pressure sensitive adhesive-coated sheeting with an easy release liner, intended for production of non-critical traffic signs and pressure sensitive stickers.

Sheeting Colors:

Color	Product Code
White	3290
Yellow	3271
Red	3272
Blue	3275
Green	3277
Brown	3279

Adhesive: Pressure-sensitive
Adhesive Color: Clear
Application Temperature: 65°F (18°C) minimum (sheeting and substrate)

Fabrication
For Series 3200 sheeting, temperature should be at least 65°F (18°C) or higher. If the sheeting temperature is less than 65°F (18°C), allow it to condition to 65°F – 75°F (18°C – 24°C) for at least 24 hours.

Best application will be achieved by using a motorized or hand operated squeeze roll applicator.

A. Cutting:
The sheeting may be hand cut, band sawed, guillotined, cold or hot die cut, and electronically cut.

B. Electronic Cutting Machines:
Users are encouraged to evaluate cutting procedures for their own equipment and shop conditions. However, these general recommendations should be followed to ensure easy handling. There should be enough down force on the knife blade to slightly score the liner. The knife blade should be sharp and clean. Letters and characters should be a minimum height of three inches with a minimum stroke width of three eighths (3/8) of an inch.

C. Premasking/Prespacing

1. Premasked Markings: Use Application Tape SCPM-3.

2. Prespaced Markings: Use Prespacing Tape SCPS-2 or Application Tape SCPM-3.

Table A – Minimum Coefficient of Retroreflection
Candelas/Foot Candle/Square Foot
Candelas/Lux/Square Meter

Obs.[1] Angle	Ent Angle[2]	White	Yellow	Red	Green	Blue	Brown
0.2	-4	70	50	14.0	9.0	4.0	1.0
0.2	+30	30	22	6.0	3.5	1.7	0.3
0.5	-4	30	25	7.5	4.5	2.0	0.3
0.5	+30	15	13	3.0	2.2	0.8	0.2

Reflectivity conforms to ASTM D 4956.

[1]Observation Angle – The angle between the illumination axis and the observation axis.

[2]Entrance Angle – The angle from the illumination axis to the retroreflector axis. The retroreflector axis is an axis perpendicular to the retroreflective surface.

Table B – CIE Chromaticity Coordinate Limits

									Reflectance Limit (Y)	
Color	x	y	x	y	x	y	x	y	Min	Max
White	.303	.300	.368	.366	.340	.393	.274	.329	27.0	
Yellow	.498	.412	.557	.442	.479	.520	.438	.472	15.0	45.0
Red	.648	.351	.735	.265	.629	.281	.565	.346	2.5	15.0
Blue	.140	.035	.244	.210	.190	.255	.065	.216	1.0	10.0
Green	.026	.399	.166	.364	.286	.446	.207	.771	3.0	12.0
Brown	.430	.340	.610	.390	.550	.450	.430	.390	1.0	9.0

Cleaning

Cleaning Signs that require cleaning should be flushed with water, then washed with a detergent solution and soft bristle brush or sponge. Avoid pressure that may damage the sign face. Flush with water following washing. Do not use solvents to clean signs.

Storage and Shelf Life

Sheeting should be stored in a cool, dry area, preferably at 65-75ºF (18-24ºC) and 30-50% relative humidity and should be applied within one year of purchase. Rolls should be stored horizontally in the shipping carton. Partially used rolls should be returned to the shipping carton or suspended horizontally from a rod or pipe through the core. Unprocessed sheets should be stored flat. Unprinted sheeting may be stored by the fabricator for a period of up to one year and after printing, sign faces may be stored for an additional period of up to six months. Sheeting and sign faces must be stored in a clean area, free from excessive moisture and direct sunlight, with ambient temperatures of 85°F (29°C) or less.

Health and Safety Information

All health hazard, precautionary, and first aid statements shall be found in the Material Safety Data Sheet (MSDS), and/or product label of chemicals prior to handling or use. Also refer to MSDS for information about the volatile organic compound (VOC) content of chemical products. Consult local regulations and authorities for possible restrictions on product VOC content and/or VOC emissions.

4 General Performance Considerations
The performance and durability of 3M reflective sheeting will depend upon a number of factors including (but not limited to) substrate selection and preparation, compliance with recommended application procedures, sign placement, geographic area, exposure conditions, atmospheric conditions (e.g. fog, snow, rain), surface deposits (e.g. dirt, dew, frost), maintenance and age. Engineer grade reflective sheeting can be expected to provide satisfactory performance for five to seven years when processed with 3M matched component inks and films, depending upon climatic conditions of the installation.

Maximum durability of engineer grade reflective sheeting can be expected in applications subject to vertical exposure on stationary objects when processed and applied to properly prepared aluminum according to 3M recommendations provided in Information Folder 1.7 on Sign Base Preparation.

The user must determine the suitability of any nonmetallic sign backing for its intended use. Applications to unprimed, excessively rough or non-weather-resistant surfaces, or exposure to severe or unusual conditions can shorten the performance of such applications. Signs or stickers that are covered by snow or ice for prolonged periods, such as those in mountainous areas, may also have reduced durability.

Premium Protective Overlay Film Series 1160

Description
Premium Protective Overlay Film Series 1160 is designed as a high performance protective transparent overlay for use on signs made from Traffic Safety and Security Division sheetings, films, and images. Series 1160 has been specifically developed for use over signs made from compatible Diamond Grade and High Intensity Prismatic Sheeting, and system of matched components, and is recommended for use with these materials. Many types of defacement from vandalism can be cleaned from this film to substantially restore performance and appearance of the overlayed sign. Two configurations are available:

1160: with premask
1160A: without premask

Properties
A. Color and Transparency
Series 1160 is a clear, colorless film. Application of Series 1160 to a sign fabricated using the matched component systems will preserve the initial and retained minimum retroreflectance specified for the sheeting used to fabricate the sign.

B. Film
Series 1160 is a high performance fluoropolymer film that provides a barrier and resists staining from common graffiti including paints, permanent marker ink, lipstick, eggs and stickers and allows for easier clean-up.

C. Adhesive and Liner
Series 1160 utilizes a clear, transparent, and pressure sensitive adhesive and has an easily removable white paper liner.

D. Premask
To aid film handling, Series 1160 is provided with a white paper premask which is easily peeled away from the film after application. After removing the premask, reroll the sign through the laminator to ensure good adhesion.

Application
A. Use Conditions Before Overlaying Film
1. Air and substrate temperatures should be above 60°F (16°C).
2. Signs must be clean and screen printed inks completely dry.

B. Equipment
1. Mechanical squeeze roll applicator
2. Hand squeeze roll applicator
3. A laminating roll with a hardness of 35 durometer (Shore A) is recommended to minimize tenting of Series 1160 over direct apply copy or ElectroCut Film Series 1170.

NOTE: Application of 1160A Film is best accomplished using a mechanical squeeze roll applicator. Use extra care when handling this film since it is not supported with a premask.

C. Premasked Film (1160)
1. Remove the premask AFTER film application to sign by lifting edge of premask with fingernail or knife and pulling premask back over itself at a very sharp angle using a steady, even tension.

Note: Edge trim BEFORE removing premask.

WARNING: Do not allow premask to be exposed to moisture. Premask must be removed before storage or shipment.

D. Trimming
1. Use a sharp cutting blade to trim film along edges. It may be helpful to grasp the edge of the unsupported overhanging film to create tension on that portion of the film while trimming.
2. The overhanging portion of the film on the TOP EDGE of the sign may be folded over smoothly and adhered to the back edge of the sign to minimize any water or dirt intrusion along the top edge of the sign. The backside of the sign must be properly cleaned before film is applied.

E. Additional Processing
1. DO NOT apply any inks, films, or sheetings in the form of copy or images over 1160 film since this film is designed to repel adhesion of such markings.

F. Splices
1. Creating film splices to overlay a sign is not recommended.

Packaging and Storage
A. Store film in a cool, dry area, preferably 65- 75°F and 30-50 percent relative humidity.

B. Faces and signs covered with overlay film do not require slipsheeting. Follow recommendations given in Information Folder 1.11 regarding proper storage, packaging, handling, shipping, and installation.
C. Use within one year from date of receipt.

Cleaning
A. Materials

1. To remove normal dirt accumulation from signs, use a soft cloth and mild detergent and water solution followed by thorough water rinse.
2. To remove other contaminations such as graffiti defacement, use commercially available cleaning systems recommended for this purpose. Important: Before using any cleaning materials, read and carefully follow product label use and safety instructions. Test the cleaner on a small area of the sign to determine its suitability and to be sure it does not cause any unwanted results or damage to the performance of the sign. Avoid the use of formulations containing strong polar solvents such as ketones (acetone, methyl ethyl ketone) or methylene chloride (dichloro methane) and other chlorinated solvents.
A cleaner such as Citrus Cleaner can be effective for removal of common types of defacement such as from permanent marking pens, eggs, and stickers. A solvent such as isopropyl alcohol (IPA), or a 50/50 blend of IPA and xylene can be effective in removing paints and lacquers. Commercially available cleaners can also be highly effective. Although Series 1160 is resistant to strong solvents, prolonged exposure to solvents can result in permanent sign damage.
3. A pressure sensitive tape such as SCPM-3 also may be effective in removing certain paints and stickers. Simply roll or squeegee the tape firmly over the defaced area and carefully lift away the tape with the defacement from the overlay. Small amounts of residual defacement may require cleaning solutions as stated above to remove small areas that the tape method did not remove adequately. The sign needs to be completely dry for this method to be effective.
4. Always use soft cloths. Do NOT use abrasive brushes, scouring pads or implements to scrape defacement from sign as these will likely damage the sign permanently.

Basic Product Warranty and Limited Remedy
Premium Protective Overlay Film Series 1160 ("Product") is warranted to be free of defects in materials and manufacture at the time of shipment and to meet the specifications stated in this Product Bulletin. If the Product is proven not to have met the Basic Warranty on its shipment date, then a buyer's exclusive remedy, and the Contractor's sole obligation, will be refunded or replacement of the sheeting.

General Surface Testing
Premium Protective Overlay Film Series 1160, when used according to the recommendation of the manufacturer, can be expected to provide the same effective field performance as the sheeting on which it is applied. Series 1160 is designed to enable signs to be cleaned from many common types of defacement caused by vandalism. The film does not prevent defacement but allows the sign to be cleaned in many situations using recommended and conventional cleaners such that the performance and appearance of the original sign is substantially restored. This would include the occasional removal of such markings as common household spray paints, lipstick, permanent pen, eggs, and/ or promotional stickers. Use of sharp implements, abrasive devices or certain types of strong and or corrosive chemicals to either deface the sign or used against recommendations to attempt to clean the sign could result in permanent damage to the overlay film and underlying sign which could severely reduce the performance expectation of the original sign. This overlay film is not intended to provide sign protection from impact, cutting, gouging, or pulling of the overlay film from the sign or from the use of strong chemicals that may damage the film and/or the underlying sign. Use of a flame or other high heat

source and other such extreme abuse of overlayed signs would very likely severely reduce or destroy the sign's effectiveness permanently.

Compliance

Failure to comply with the requirements of these specifications shall be cause for cancellation of annual contract if applicable. ***Jefferson Parish requires sign dating of all signs at the time of application. That date constitutes the start of field performance obligation period.***

Products will be accepted as product series number stated above or approved equal.

All products shall be warranted that they are manufactured in accordance with the applicable material specifications and are free from defects in workmanship and materials. Any defective items sold under this contract shall be replaced at no cost to the purchaser.

Material deliveries for bidding purposes, bid prices shall reflect no minimum delivery quantity.

The bidder is not to pre-ship any quantity until authorized by purchase order.

The quantities shown on the proposal guide are approximate quantities to be acquired by Jefferson Parish over a two (2) year period. Actual usage will be on an "as needed" basis.

All pertinent technical specifications and literature must be included in the bid.

Successful bidder will be allowed 30 days, from the date of contract execution, to stock and maintain sufficient quantities of material on hand to meet the needs of Jefferson Parish. Vendor will ship requested quantities (as indicated on purchase order) within seven (7) calendar days.

Bid shall include all freight and delivery costs to Jefferson Parish.

DATE: 4/27/2022

BID NO.: 50-00138079

INVITATION TO BID
THIS IS NOT AN ORDER

JEFFERSON PARISH

PURCHASING DEPARTMENT
P.O. BOX 9
GRETNA, LA. 70054-0009
504-364-2678

BUYER: DREAMEY@jeffparish.net

BIDS WILL BE RECEIVED ONLINE VIA WWW.JEFFPARISHBIDS.NET UNTIL 2:00 PM, 5/12/2022 AND PUBLICLY OPENED THEREAFTER IN THE WEST BANK PURCHASING DEPT, SUITE 4400, JEFFERSON PARISH GENERAL GOVERNMENT BUILDING, 200 DERBIGNY STREET, GRETNA, LA 70053. At no charge, bidders are to submit via Jefferson Parish's electronic procurement page by visiting www.jeffparishbids.net to register for this free site. Additional instructions are included in the text box highlighting electronic procurement.

LATE BIDS WILL NOT BE ACCEPTED

NOTE: ONLY BIDS WRITTEN IN INK OR TYPEWRITTEN, AND PROPERLY SIGNED BY A MEMBER OF THE FIRM OR AUTHORIZED REPRESENTATIVE, WILL BE ACCEPTED. PENCIL AND/OR PHOTOSTATIC FIGURES OR SIGNATURES SHALL RESULT IN BID REJECTION. HOWEVER, ELECTRONIC SIGNATURES AS DEFINED IN LSA - R.S. 9:2620(8) ARE ACCEPTABLE. SIGNATURE MUST BE A SECURED DIGITAL SIGNATURE.

INSTRUCTIONS FOR BIDDERS AND GENERAL CONDITIONS

THE FOLLOWING INSTRUCTIONS APPLY TO ALL BIDS

All bids submitted are subject to these instructions and general conditions and any special conditions and specifications contained herein, all of which are made part of this bid proposal reference. By submitting a bid, vendor agrees to comply with all provisions of Louisiana Law as well be in compliance with the Jefferson Parish Code of Ordinances, Louisiana Code of Ethics, applicable Jefferson Parish ethical standards and Jefferson Parish Resolution No. 113646 and/or Resolution No. 113647 as amended.

Jefferson Parish adheres to the Louisiana Code of Governmental Ethics, contained in Louisiana Revised Statutes Annotated, R.S. 42:1101, et seq. Vendor/Proposer by this submission, warrants that there are no "conflicts of interest" related to this procurement that would violate applicable Louisiana Law. Violation of the Louisiana Code of Governmental Ethics may result in rescission of contract, permit or licenses, and the imposition of fines and/or penalties, without contractual liability to the public in accordance with applicable law.

All vendors submitting bids should register as a Jefferson Parish vendor if not already yet registered. Registration forms may be downloaded from http://purchasing.jeffparish.net and by clicking on Vendor Information. Current W-9 forms with respective Tax Identification numbers and vendor applications may be submitted at any time; however, if your company is not registered and/or a current W-9 form is not on file, vendor registration is mandatory. Vendors may experience a delay in payment if your company is not a registered vendor with Jefferson Parish.

All quotations shall be based on F.O.B. Agency warehouse or job site, anywhere within the Parish as designated by the Purchasing Department. This provision does not apply to public works projects

JEFFERSON PARISH requires all products to be new (current) and all work must be performed according to standard practices for the project. Unless otherwise specified, no aftermarket parts will be accepted. Unless otherwise specified, all workmanship and materials must have at least one (1) year guaranty, in writing, from the date of delivery and/or acceptance of the project. Any deviations or alterations from the specifications must be indicated and/or supporting documentation supplied with bid submission.

Bidders should submit all questions in writing via email to the buyer's email address as indicated above, no later than Five (5) working days prior to the bid opening. Bid numbers should be mentioned in all requests. If submitting online, vendors may send questions via the E-Procurement site no later than Five (5) working days prior to the bid opening.

If this bid requires a pre-bid conference (see Additional Requirements section), bidders are advised that such conference will be held to allow bidders the opportunity to identify any discrepancies in the bid specifications and seek further clarification regarding instructions. The Purchasing Department will issue a written response to bidders' questions in the form of an Addendum. Please note that all official communication will be expressed in the form of an addendum.

All formal Addenda require written acknowledgement on the bid form by the bidder. Failure to acknowledge an Addendum on the bid form shall cause the bid to be rejected. JEFFERSON PARISH reserves the right to award bid to next lowest responsive and responsible bidder in this event.

JEFFERSON PARISH will accept one price for each item unless otherwise indicated. Two or more prices for one item will result in bid rejection. Bidders are required to complete, sign and return the bid form and/or complete and return the associated line item pricing forms as indicated. Vendors must not alter the bid forms. Doing so will cause the bid to be rejected.

A corporate resolution or written evidence of the individual signing the bid having such authority must be submitted with the bid. Failure to comply will cause bid to be rejected. For corporate entities, such written evidence may be a printout of the Louisiana Secretary of State's website listing the signatory as an officer. Such printout shall be included with the bid submission. Bids submitted by Owners or Sole Proprietorships must include certification that he or she owns the entity for which the bid is signed. This documentation must be submitted with the bid. Failure to do so will result in bid rejection.

NOTE: A sample corporate resolution can be downloaded from our website http://purchasing.jeffparish.net or you may provide your own document. A sample certification of sole proprietorship can also be downloaded from our website http://purchasing.jeffparish.net or you may provide your own document.

INSTRUCTIONS FOR BIDDERS AND GENERAL CONDITIONS

A. AWARD OF CONTRACT: JEFFERSON PARISH reserves the right to award contracts or place orders on a lump sum or individual item basis, or such combination, as shall in its judgment be in the best interest of JEFFERSON PARISH. Every contract or order shall be awarded to the LOWEST RESPONSIVE and RESPONSIBLE BIDDER, taking into consideration the CONFORMITY WITH THE SPECIFICATIONS and the DELIVERY AND/OR COMPLETION DATE. SPLIT AWARDS MADE TO SEVERAL VENDORS WILL ONLY BE GRANTED TO THOSE DEEMED RESPONSIVE AND RESPONSIBLE.

All bid prices shall remain valid for 45 days. Jefferson Parish and the lowest responsive and responsible bidder(s) by mutual written consent may mutually agree to extend the deadline for award by one (1) or more extensions of thirty (30) calendar days.

PROTESTS: Only those vendors that submit bids in response to this solicitation may protest any element of the procurement, in writing to the Director of the Purchasing Department. Written protest must be received within 48 hours of the release of the bid tabulation by the Purchasing Department. After consultation, the Parish Attorney's Office will then respond to protests in writing. (For more information, please see Chapter 2, Article VII, Division 2, Sec. 2-914.1 of the Jefferson Parish Code of Ordinances.)

PREFERENCE: Unless federal funding is directly spent by Jefferson Parish for this purchase, preference is hereby given to materials, supplies, and provisions produced, manufactured or grown in Louisiana, quality being equal to articles offered by competitors outside the state. "LSA – R.S. 38:2251-2261"

B. USE OF BRAND NAMES AND STOCK NUMBERS: Where brand names and stock numbers are specified, it is for the purpose of establishing certain minimum standards of quality. Bids may be submitted for products of equal quality, provided brand names and stock numbers are specified. Complete product data may be required prior to award.

C. CANCELLATION OF CONTRACT: JEFFERSON PARISH reserves the right to cancel all or any part if not shipped promptly. No charges will be allowed for parking or cartage unless specified in quotation. The order must not be filled at a higher price than quoted. JEFFERSON PARISH reserves the right to cancel any contract at anytime and for any reason by issuing a THIRTY (30) day written notice to the contractor.

For good cause and as consideration for executing a contract with Jefferson Parish, vendor conveys, sells, assigns and transfers to Jefferson Parish or its assigns all rights, title and interest in and to all causes of action it may now or hereafter acquire under the antitrust laws of the United States and the State of Louisiana, relating to the particular good or services purchased or acquired by Jefferson Parish.

D. PRICES: Jefferson Parish is exempt from paying sales tax under LSA-R.S. 47:301 (8)(c). All prices for purchases by Jefferson Parish of supplies and materials shall be quoted in the unit of measure specified and unless otherwise specified, shall be exclusive of state and local taxes. The price quoted for work shall be stated in figures. In the event there is a difference in unit prices and totals, the unit price shall prevail.

Quantities listed are for bidding purposes only. Actual requirements may be more or less than quantities listed.

Bidders are not to exclude from participation in, deny the benefits of, or subject to discrimination under any program or activity, any person in the United States on the grounds of race, color, national origin, or sex; nor discriminate on the basis of age under the Age Discrimination Act of 1975, or with respect to an otherwise qualified handicapped individual as provided in Section 504 of the Rehabilitation Act of 1973, or on the basis of religion, except that any exemption from such prohibition against discrimination on the basis of religion as provided in the Civil Rights Act of 1964, or Title VI and VII of the Act of April 11, 1968, shall also apply. This assurance includes compliance with the administrative requirements of the Revenue Sharing final handicapped discrimination provisions contained in Section 51.55 (c), (d), (e), and (k)(5) of the Regulations. New construction or renovation projects must comply with Section 504 of the 1973 Rehabilitation Act, as amended, in accordance with the American National Standard Institute's specifications (ANSI A17.1-1961).

INSTRUCTIONS FOR BIDDERS AND GENERAL CONDITIONS

Jefferson Parish and its partners as the recipients of federal funds are fully committed to awarding a contract(s) to firm(s) that will provide high quality services and that are dedicated to diversity and to containing costs. Thus, Jefferson Parish strongly encourages the involvement of minority and/or woman-owned business enterprises (DBE's, including MBE's, WBE's and SBE's) to stimulate participation in procurement and assistance programs.

The purpose and intention of this invitation to bid is to afford all suppliers an equal opportunity to bid on all construction, maintenance, repair, operating supplies and/or equipment listed in this bid proposal. JEFFERSON PARISH WILL ACCEPT ONE BID ONLY FROM EACH VENDOR. Items bid must meet specifications.

Advertised bids will be tabulated and a copy of the tabulation will be forwarded to each responding bidder.

IN ACCORDANCE WITH STATE REGULATIONS JEFFERSON PARISH OFFERS ELECTRONIC PROCUREMENT TO ALL VENDORS

This electronic procurement system allows vendors the convenience of reviewing and submitting bids online. This is a secure site and authorized personnel have limited read access only. Bidders are to submit electronically using this free service; while the website accepts various file types, one single PDF file containing all appropriate and required bid documents is preferred. Bidders submitting uploaded images of bid responses are solely responsible for clarity. If uploaded images/documents are not legible, then bidder's submission will be rejected. Please note all requirements contained in this bid package for electronic bid submission.

Please visit our E-Procurement Page at www.jeffparishbids.net to register and view Jefferson Parish solicitations. For more information, please visit the Purchasing Department page at http://purchasing.jeffparish.net.

The general specifications for construction projects and the purchase of materials, services and/or supplies are those adopted by the JEFFERSON PARISH Council by Resolution No. 113646 or 113647 as amended. The general conditions adopted by this resolution shall be considered as much a part of this document as if they were written wholly herein. A copy may be obtained from the Office of the Parish Clerk, Suite 6700, Jefferson Parish General Government Building, 200 Derbigny Street, Gretna, LA 70053.
You may also obtain a copy by visiting the Purchasing Department webpage at http://purchasing.jeffparish.net and clicking on Online Forms.

ADDITIONAL REQUIREMENTS FOR THIS BID

PLEASE MATCH THE NUMBERS PRINTED IN THIS BOX WITH THE CORRESPONDING INSTRUCTIONS BELOW.

10,12,13,15

1. All bidders must attend the MANDATORY pre-bid conference and will be required to sign in and out as evidence of attendance. In accordance with LSA R.S. 38:2212(I), all prospective bidders shall be present at the beginning of the MANDATORY pre-bid conference and shall remain in attendance for the duration of the conference. Any prospective bidder who fails to attend the conference or remain for the duration shall be prohibited from submitting a bid for the project.

2. Attendance to this pre-bid conference is optional. However, failure to attend the pre-bid conference shall not relieve the bidder of responsibility for information discussed at the conference. Furthermore, failure to attend the pre-bid conference and inspection does not relieve the successful bidder from the necessity of furnishing materials or performing any work that may be required to complete the work in accordance with the specification with no additional cost to the owner.

3. Contractor must hold current applicable JEFFERSON PARISH licenses with the Department of Inspection and Code Enforcement. Contractor shall obtain any and all permits required by the JEFFERSON PARISH Department of Inspection and Code Enforcement. The contractor shall be responsible for the payment of these permits. All permits must be obtained prior to the start of the project. Contractor must also hold any and all applicable Federal and State licenses. Contractor shall be responsible for the payment of these permits and shall obtain them prior to the start of the project.

INSTRUCTIONS FOR BIDDERS AND GENERAL CONDITIONS

4. A LA State Contractor's License will be required in accordance with LSA R.S. 37-2150 et. seq. and such license number will be shown on the outside of the bid electronic envelope. Failure to comply will cause the bid to be rejected. When submitting the bid electronically, the license number must be entered in the appropriate field in the electronic procurement system. Failure to comply will cause the bid to be rejected.

5. It is the bidder's responsibility to visit the job site and evaluate the job before submitting a bid.

6. Job site must be clean and free of all litter and debris daily and upon completion of the contract. Passageways must be kept clean and free of material, equipment, and debris at all times. Flammable material must be removed from the job site daily because storage will not be permitted on the premises. Precaution must be exercised at all times to safeguard the welfare of JEFFERSON PARISH and the general public.

7. PUBLIC WORKS BIDS: All awards for public works in excess of $5,000.00 will be reduced to a formal contract which shall be recorded at the contractor's expense with the Clerk of Court and Ex-Officio Recorder of Mortgages for the Parish of Jefferson. A price list of recordation costs may be obtained from the Clerk of Court and Ex-Officio Recorder of Mortgages for the Parish of Jefferson. All awards in excess of $25,000.00 will require both a performance and a payment bond. Unless otherwise stated in the bid specifications, the performance bond requirements shall be 100% of the contract price. Unless otherwise state in the bid specifications, the payment bond requirements shall be 100% of the contract price. Both bonds shall be supplied at the signing of the contract.

8. NON-PUBLIC WORKS BIDS: A performance bond will be required for this bid. The amount of the bond will be 100% of the contract price unless otherwise indicated in the specifications. The performance bond shall be supplied at the signing of the contract.

9. NON-PUBLIC WORKS BIDS: A payment bond will be required for this bid. The amount of the bond will be 100% of the contract price unless otherwise indicated in the specifications. The payment bond shall be supplied at the signing of the contract.

10. All bidders must comply with the requirements stated in the attached "Standard Insurance Requirements" sheet attached to this bid solicitation. Failure to comply with this instruction will result in bid rejection.

11. A bid bond will be required with bid submission in the amount of 5% of the total bid, unless otherwise stated in the bid specifications. All sureties must be in original format (no copies) When submitting a bid online, vendors must submit an electronic bid bond through the respective online clearinghouse bond management system(s) as indicated in the electronic bid solicitation on Central Auction House. No scanned paper copies of any bid bond will be accepted as part of the electronic bid submission.

12. This is a requirements contract to be provided on an as needed basis. JEFFERSON PARISH makes no representations on warranties with regard to minimum guaranteed quantities unless otherwise stated in the bid specifications.

13. Freight charges should be included in total cost when quoting. If not quoted FOB DELIVERED, freight must be quoted as a separate item. Bid may be rejected if not quoted FOB DELIVERED or if freight charges are not indicated on bid form.

14. PUBLIC WORKS BIDS - Completed, Signed and Properly Notarized Affidavits Required; This applies to all solicitations for construction, alteration or demolition of public buildings or projects, in conformity with the provisions contained in LSA-RS 38:2212.9, LSA-RS 38:2212.10, LSA-RS 38:2224, and Sec 2-923.1 of the Jefferson Parish Code of Ordinances. For bidding purposes, all bidders must submit with bid submission COMPLETED, SIGNED and PROPERLY NOTARIZED Affidavits, including: Non-Conviction Affidavit, Non-Collusion Affidavit, Campaign Contribution Affidavit, Debt Disclosures Affidavit and E-Verify Affidavit. For the convenience of vendors, all affidavits have been combined into one form entitled PUBLIC WORKS BID AFFIDAVIT. This affidavit must be submitted in its original format, and without material alteration, in order to be compliant and for the bid to be considered responsive. A scanned copy of the completed, signed and properly notarized affidavit may be submitted with the bid, however, the successful bidder must submit the original affidavit in its original format and without material alteration upon contract execution. Failure to comply will result in the bid submission being rejected as non-responsive. The Parish reserves the right to award bid to the next lowest responsive and responsible bidder in this event.

INSTRUCTIONS FOR BIDDERS AND GENERAL CONDITIONS

15. NON PUBLIC WORK BIDS - Completed, Signed and Properly Notarized Affidavits Required in conformity with the provisions contained in LSA – RS 38:2224 and Sec 2-923.1 of the Jefferson Parish Code of Ordinances. For bidding purposes, all bidders must submit with bid submission COMPLETED, SIGNED and PROPERLY NOTARIZED Affidavits, including: Non-Collusion Affidavit, Debt Disclosures Affidavit and Campaign Contribution Affidavit. For the convenience of vendors, all affidavits have been combined into one form entitled NON PUBLIC WORKS BID AFFIDAVIT. This affidavit must be submitted in its original format, and without material alteration, in order to be compliant and for the bid to be considered responsive. A scanned copy of the completed, signed and properly notarized affidavit may be submitted with the bid, however, the successful bidder must submit the original affidavit in its original format and without material alteration upon contract execution. Failure to comply will result in the bid submission being rejected as non-responsive. The Parish reserves the right to award bid to the next lowest responsive and responsible bidder in this event.

16. The ensuing contract for this bid solicitation may be eligible for FEMA reimbursement and/or Federal funding/reimbursement. As such, the referenced appendix will be applicable accordingly and shall be considered a part of the bid documents. All applicable certifications must be duly completed, signed and submitted with bid submission. Failure to submit applicable certifications with bid submission will result in bid rejection.

17. For this project, the Contractor shall not pay any state or local sales or use taxes on materials and equipment which are affixed and made part of the immovable property of the project or which is permanently incorporated in the project (hereinafter referred to as "applicable materials and equipment."). All purchases of applicable materials or equipment shall be made by the contractor on behalf of and as the agent of Jefferson Parish (Owner), a political subdivision of the State of Louisiana. No state and local sales and use taxes are owed on applicable materials and equipment under the provisions of Act 1029 of the 1991 Regular Session - Louisiana Revised Statute 47:301(8)(c). Owner will furnish to contractor a certificate form which certifies that Owner is not required to pay such state or local sales and use taxes, and contractor shall furnish a copy of such certificate to all vendors or suppliers of the applicable materials and equipment, and report to Owner the amount of taxes not incurred.

It shall be the duty of every parish officer, employee, department, agency, special district, board, and commission: and the duty of every contractor, subcontractor, and licensee of the parish, and the duty of every applicant for certification of eligibility for a parish contract or program, to cooperate with the Inspector General in any investigation, audit, inspection, performance review, or hearing pursuant to JPCO 2-155.10(19). By signing this document, every corporation, partnership, or person contracting with PARISH, whether by cooperative endeavor, intergovernmental agreement, bid, proposal, application or solicitation for a parish contract, and every application for certification of eligibility for a parish contract or program, attests that it understands and will abide by all provisions of JPCO 2-155.10.

See Page 1 for Conflicts of Interest Statement

BID NO.: 50-00138079

BID FORM
Non Public Works

All Public Work Projects are required to use the Louisiana Uniform Public Work Bid Form

All prices must be held firm unless an escalation provision is requested in this bid. Jefferson Parish will allow one escalation during the term of the contract, which may not exceed the U.S. Bureau of Labor Statistics National Index for all Urban Consumers, unadjusted 12 month figure. The most recently published figure issued at the time an adjustment is requested will be used. A request must be made in writing by the vendor, and the escalation will only be applied to purchases made after the request is made.

Are you requesting an escalation provision?

YES _____ NO _____

MAXIMUM ESCALATION PERCENTAGE REQUESTED _____%

INITIAL BID PRICES WILL REMAIN FIRM THROUGH THE DATE OF _____.

For the purposes of comparison of bids when an escalation provision is requested, Jefferson Parish will apply the maximum escalation percentage quoted by the bidder to the period to which it is applied in the bid. The initial price and the escalation will be used to calculate the total bid price. It will be assumed,for comparison of prices only, that an equal amount of material or labor is purchased each month throughout the entire contract.

DELIVERY: FOB JEFFERSON PARISH

INDICATE DELIVERY DATE ON EQUIPMENT AND SUPPLIES _____

LOUISIANA CONTRACTOR'S LICENSE NO.: (if applicable) _____

THIS SECTION MUST BE COMPLETED BY BIDDER:

FIRM NAME: _____

ADDRESS: _____

CITY, STATE: _____ ZIP: _____

TELEPHONE: ( ) _____ FAX: ( ) _____

EMAIL ADDRESS: _____

In the event that addenda are issued with this bid, bidders MUST acknowledge all addenda on the bid form.Bidder must acknowledge receipt of an addendum on the bid form by placing the addendum number as indicated. Failure to acknowledge any addendum on the bid form will result in bid rejection.

Acknowledge Receipt of Addenda: NUMBER: _____

NUMBER: _____

NUMBER: _____

NUMBER: _____

TOTAL PRICE OF ALL BID ITEMS: $ _____

AUTHORIZED SIGNATURE: _____ _____

Printed Name

TITLE: _____

SIGNING INDICATES YOU HAVE READ AND COMPLY WITH THE INSTRUCTIONS AND CONDITIONS.

NOTE: All bids should be returned with the BID NUMBER and BID OPENING DATE indicated on the outside of the envelope submitted to the Purchasing Department.

INVITATION TO BID FROM JEFFERSON PARISH - continued

BID NO.: 50-00138079

SEALED BID

ITEM NUMBER	QUANTITY	U/M	DESCRIPTION OF ARTICLES	UNIT PRICE QUOTED	TOTALS
			TWO YEAR CONTRACT FOR SUPPLY OF REFLECTIVE SHEETING FOR THE JEFFERSON PARISH TRAFFIC ENGINEERING DIVISION.		
1	40,000.00	SQFT	0010 DIAMOND GRADE REFLECTIVE SHEETING WITH PRESSURE SENSITIVE ADHESIVE SERIES 4000 OR APPROVED EQUAL COLOR SERIES: WHITE 4090 YELLOW 4091 RED 4092 BLUE 4095 GREEN 4097 BROWN 4099		
2	15,000.00	SQFT	0020 DIAMOND GRADE REFLECTIVE SHEETING WITH PRESSURE SENSITIVE ADHESIVE SERIES 4000 OR APPROVED EQUAL COLOR SERIES FLOURESCENT: FLOURESCENT YELLOW - FL 4081 FLOURESCENT YELLOW GREEN - FYG 4083 FLOURESCENT ORANGE - FO 4084		
3	30,000.00	SQFT	0030 ELECTROCUT FILM WITH PRESSURE SENSITIVE ADHESIVE SERIES 1170 OR APPROVED EQUAL COLOR SERIES: CLEAR 1170C YELLOW 1171 RED 1172 ORANGE 1174 BLUE 1175 GREEN 1177 BLACK 1178 BROWN 1179 ALL OF THE ABOVE ELECTRONIC CUTTABLE FILM IS TO BE NON-PERFORATED FOR USE IN FRICTION FEED ELECTRONIC CUTTING DEVICES		
4	30,000.00	SQFT	0040 CLEAR TRANSFER TAPE SERIES TPM5 OR APPROVED EQUAL FOR USE WITH ELECTROCUT FILM SERIES 1170 THE ABOVE TRANSFER TAPE IS USED FOR PURPOSES OF PRESPACING AND TRANSFERRING ELECTRONIC CUTTABLE FILM. *** 100 YARD ROLLS ONLY ***		
5	5,000.00	SQFT	0050 ENCLOSED LENS PRESSURE SENSITIVE ADHESIVE COATED REFLECTIVE SHEETING		

INVITATION TO BID FROM JEFFERSON PARISH - continued

BID NO.: 50-00138079

SEALED BID

ITEM NUMBER	QUANTITY	U/M	DESCRIPTION OF ARTICLES	UNIT PRICE QUOTED	TOTALS
			3M SERIES 3200 OR APPROVED EQUAL ADVANCED SIZES: 24", 30", 36", 48" WIDTH COLOR SERIES: WHITE 3290 YELLOW 3271 RED 3272 BLUE 3275 GREEN 3277 BROWN 3279		
6	250.00	SQFT	0060 CLEAR PROTECTIVE OVERLAY FILM SERIES 1160 OR APPROVED EQUAL *** QUANTITIES WILL BE PURCHASED BY SQUARE FOOTAGE AND INVOICED AS SUCH ***		

CORPORATE RESOLUTION

EXCERPT FROM MINUTES OF MEETING OF THE BOARD OF DIRECTORS OF

_____

INCORPORATED.

AT THE MEETING OF DIRECTORS OF _____
INCORPORATED, DULY NOTICED AND HELD ON _____,
A QUORUM BEING THERE PRESENT, ON MOTION DULY MADE AND SECONDED. IT WAS:

RESOLVED THAT _____, BE AND IS HEREBY APPOINTED, CONSTITUTED AND DESIGNATED AS AGENT AND ATTORNEY-IN-FACT OF THE CORPORATION WITH FULL POWER AND AUTHORITY TO ACT ON BEHALF OF THIS CORPORATION IN ALL NEGOTIATIONS, BIDDING, CONCERNS AND TRANSACTIONS WITH THE PARISH OF JEFFERSON OR ANY OF ITS AGENCIES, DEPARTMENTS, EMPLOYEES OR AGENTS, INCLUDING BUT NOT LIMITED TO, THE EXECUTION OF ALL BIDS, PAPERS, DOCUMENTS, AFFIDAVITS, BONDS, SURETIES, CONTRACTS AND ACTS AND TO RECEIVE ALL PURCHASE ORDERS AND NOTICES ISSUED PURSUANT TO THE PROVISIONS OF ANY SUCH BID OR CONTRACT, THIS CORPORATION HEREBY RATIFYING, APPROVING, CONFIRMING, AND ACCEPTING EACH AND EVERY SUCH ACT PERFORMED BY SAID AGENT AND ATTORNEY-IN-FACT.

I HEREBY CERTIFY THE FOREGOING TO BE A TRUE AND CORRECT COPY OF AN EXCERPT OF THE MINUTES OF THE ABOVE DATED MEETING OF THE BOARD OF DIRECTORS OF SAID CORPORATION, AND THE SAME HAS NOT BEEN REVOKED OR RESCINDED.

_____

SECRETARY-TREASURER

_____

DATE

Non-Public Works Bid
Affidavit Instructions

- **Affidavit is supplied as a courtesy to Affiants, but it is the responsibility of the affiant to insure the affidavit they submit to Jefferson Parish complies, in both form and content, with federal, state and parish laws.**
- **Affidavit must be signed by an authorized representative of the entity or the affidavit will not be accepted.**
- **Affidavit must be notarized or the affidavit will not be accepted.**
- **Notary must sign name, print name, and include bar/notary number, or the affidavit will not be accepted.**
- **Affiant MUST select either A or B when required or the affidavit will not be accepted.**
- **Affiants who select choice A must include an attachment or the affidavit will not be accepted.**
- **If both choice A and B are selected, the affidavit will not be accepted.**
- **Affidavit marked N/A will not be accepted.**
- **It is the responsibility of the Affiant to submit a new affidavit if any additional campaign contributions are made after the affidavit is executed but prior to the time the council acts on the matter.**

Instruction sheet may be omitted when submitting the affidavit

Non-Public Works Bid

AFFIDAVIT

STATE OF _____

PARISH/COUNTY OF _____

BEFORE ME, the undersigned authority, personally came and appeared: _____ _____, (Affiant) who after being by me duly sworn, deposed and said that he/she is the fully authorized _____ of _____ (Entity), the party who submitted a bid in response to Bid Number _____, to the Parish of Jefferson.

Affiant further said:

Campaign Contribution Disclosures

(Choose A or B, if option A is indicated please include the required attachment):

Choice A _____ Attached hereto is a list of all campaign contributions, including the date and amount of each contribution, made to current or former elected officials of the Parish of Jefferson by Entity, Affiant, and/or officers, directors and owners, including employees, owning 25% or more of the Entity during the two-year period immediately preceding the date of this affidavit or the current term of the elected official, whichever is greater. Further, Entity, Affiant, and/or Entity Owners have not made any contributions to or in support of current or former members of the Jefferson Parish Council or the Jefferson Parish President through or in the name of another person or legal entity, either directly or indirectly.

Choice B _____ there are **NO** campaign contributions made which would require disclosure under Choice A of this section.

Debt Disclosures

(Choose A <u>or</u> B, if option A is indicated please include the required attachment):

Choice A _____ Attached hereto is a list of all debts owed by the affiant to any elected or appointed official of the Parish of Jefferson, and any and all debts owed by any elected or appointed official of the Parish to the Affiant.

Choice B _____ There are **<u>NO</u>** debts which would require disclosure under Choice A of this section.

Affiant further said:

That Affiant has employed no person, corporation, firm, association, or other organization, either directly or indirectly, to secure the public contract under which he received payment, other than persons regularly employed by the Affiant whose services in connection with the construction, alteration or demolition of the public building or project or in securing the public contract were in the regular course of their duties for Affiant; and

[*The remainder of this page is intentionally left blank.*]

That no part of the contract price received by Affiant was paid or will be paid to any person, corporation, firm, association, or other organization for soliciting the contract, other than the payment of their normal compensation to persons regularly employed by the Affiant whose services in connection with the construction, alteration or demolition of the public building or project were in the regular course of their duties for Affiant.

_____
Signature of Affiant

_____
Printed Name of Affiant

SWORN AND SUBSCRIBED TO BEFORE ME
ON THE _____ DAY OF _____, 20___.

_____
Notary Public

_____
Printed Name of Notary

_____
Notary/Bar Roll Number

My commission expires _____.

STANDARD INSURANCE REQUIREMENTS FOR BIDDING PURPOSES

All required insurance under this bid shall conform to Jefferson Parish Resolution No. 113646 or No. 113647, as applicable. Contractors may not commence any work under any ensuing contract unless and until all required insurance and associated evidentiary requirements thereto have been met, along with any additional specifications contained in the **Invitation to Bid**. Except as where otherwise precluded by law, the Parish Attorney or his designee, with the concurrence of the Director of Risk Management or his designee, may agree on a case-by-case basis, to deviate from Jefferson Parish's standard insurance requirements, as provided in this Section. Vendors requesting deviation therefrom shall submit such requests in writing, along with compelling substantiation, to the Purchasing Department prior to the bid's due date. Any changes to the insurance requirements will be reflected in the bid specifications and addenda. Prior to contract execution and at all times thereafter during the term of such contract, contractors must provide and continuously maintain all coverages as required by the foregoing Resolutions, and the contract documents. Failure to do so shall be grounds for suspension, discontinuation or termination of the contract.

For bidding purposes, bidders must submit with bid submission a current (valid) insurance certificate evidencing the required coverages. Failure to comply will cause bid to be rejected. The current insurance certificate will be used for proof of insurance at time of evaluation. Thereafter, and prior to contract execution, the low bidder will be required to provide final insurance certificates to the Parish which shall name **the Jefferson Parish, its Districts Departments and Agencies under the direction of the Parish President and the Parish Council** as additional insureds regarding negligence by the contractor for the Commercial General Liability and the Comprehensive Automobile Liability policies. Additionally, said certificates should reflect the name of the Parish Department receiving goods and services and reference the respective Jefferson Parish bid number.

JEFFERSON PARISH REQUIRED STANDARD INSURANCE

☑ **WORKER'S COMPENSATION INSURANCE**

As required by Louisiana State Statute, exception; Employer's Liability, Section B shall be $1,000,000 per occurrence when Work is to be over water and involves maritime exposures to cover all employees not covered under the State Worker's Compensation Act, otherwise this limit shall be no less than $500,000 per occurrence.

Note: If your company is not required by law to carry workmen's compensation insurance, i.e. not a Louisiana company, sole employee of the company, then bidders must request a workmen's compensation insurance declaration affidavit prior to the bid opening date. This insurance declaration affidavit must be fully completed, signed, properly notarized and submitted with the bid. A scanned copy may be submitted with the bid; however, the successful bidder must submit the original affidavit in its original format and without material alteration upon contract execution. Failure to comply will result in the bid submission being

rejected as non-responsive. The Parish reserves the right to award bid to the next lowest responsive and responsible bidder in this event.

☑ **COMMERCIAL GENERAL LIABILITY**

Shall provide limits not less than the following: $1,000,000.00 Combined Single Limit per Occurrence for bodily injury and property damage.

☑ **COMPREHENSIVE AUTOMOBILE LIABILITY**

Bodily injury liability $1,000,000.00 each person; $1,000,000.00 each occurrence. Property Damage Liability $1,000,000.00 each occurrence.

Note: This category may be omitted if bidders do not/will not utilize company vehicles for the project or do not possess company vehicles. Bidder must request an automobile insurance declaration affidavit prior to the bid opening date. This insurance declaration affidavit must be fully completed, signed, properly notarized and submitted with the bid. A scanned copy of the completed, signed and properly notarized affidavit may be submitted with the bid; however, the successful bidder must submit the original affidavit in its original format and without material alteration upon contract execution. Failure to comply will result in the bid submission being rejected as non-responsive. The Parish reserves the right to award bid to the next lowest responsive and responsible bidder in this event.

DEDUCTIBLES - The Parish Attorney with concurrence of the Director of Risk Management have waived the deductible section of the Terms and Conditions for all Invitations to Bid, until further notice.

UMBRELLA LIABILITY COVERAGE

An umbrella policy or excess may be used to meet minimum requirements.

FOR CONSTRUCTION AND RENOVATION PROJECTS:

The following are required if selected below. Such insurance is due upon contract execution.

☐ **OWNER'S PROTECTIVE LIABILITY**

To be for the same limits of liability for bodily injury and property damage liability established for commercial general liability.

☐ **BUILDER'S RISK INSURANCE**

The contractor shall maintain Builder's Risk Insurance at his own expense to insure both the owner (Parish of Jefferson) and contractor as their interest may appear.