Jefferson Parish
State of Louisiana

Bid Number 50–00136857

Two Year Contract for a Supply of 3M Pavement Marking Tape for Jefferson Parish Traffic Engineering Department.

BID DUE: April 7, 2022 AT 2:00 PM

ATTENTION VENDORS!!!

Please review all pages and respond accordingly, complying with all provisions in the technical specifications and Jefferson Parish Instructions for Bidders and General Terms and Conditions. All bids must be received on the Purchasing Department's eProcurement site, www.jeffparishbids.net, by the bid due date and time. Late bids will not be accepted.

Jefferson Parish Purchasing Department
200 Derbigny Street
General Government Building, Suite 4400
Gretna, LA 70053
Donna Reamey
Email: Dreamey@jeffparish.net
Phone: 504-364-2684

JEFFERSON PARISH DEPARTMENT OF ENGINEERING
TRAFFIC ENGINEERING DIVISION

Specifications for Pavement Marking Tape - Patterned Pavement Marking Tape for Intersections and Durable, Abrasion-Resistant, Retroreflective Raised Pavement Markers

MATERIAL ONLY

Potential vendors may be required to provide contact information for municipalities where their material has been used successfully on roadways in similar environmental conditions prior to acceptance of low bid.

PAVEMENT MARKING TAPE – PATTERNED PAVEMENT MARKING TAPE FOR INTERSECTIONS

Description: This specification describes Pavement Marking Tape Series 270 ES retroreflective patterned polymer pavement marking that can be used as an inlay marking on new asphalt or as an overlay marking on asphalt and concrete pavement surfaces in good condition. Series 270 ES tape shall offer "Extended Season" applications with pressure sensitive adhesive (PSA) package on the bottom surface. Series 270 ES shall not require surface preparation adhesive prior to application.

Materials:
Series A270 ES: Unlinered. Used for long lines, edge lines, channelizing lines, gore markings, stop bars and crosswalks.

Series L270 ES: Linered. Used to cut symbols and legends.

Series SMS-L270 ES: Linered. Precut symbols and legends.

Properties:

A. Product Features:

- Durable, conformable to pavement and retroreflective
- Embedded net provides increased tear resistance
- Pressure sensitive adhesive (PSA) on bottom surface
- No surface preparation adhesive required when applied within standard tape application season
- Retroreflective layer of glass beads bonded in a highly durable polyurethane topcoat
- Manufactured without the use of heavy metals, lead chromate pigments or other similar, lead containing chemicals
- Nominal thickness of 0.065 in. (1.6 mm) at pattern heights
- White: 270 ES
- Yellow: 271 ES

B. Reflectance

Series 270 ES tape shall have the following initial minimum retroreflectance values when measured in accordance with ASTM-D4061 and ASTM 4505. The photometric quality to be measured is coefficient of retroreflected luminance (RL) and shall be expressed as:

English RL: millicandelas per square foot per footcandle [(mcd • ft-2) • fc-1] or equivalently as:

Metric RL: millicandelas per square meter per lux [(mcd • m-2) • lx-1]

	White	Yellow
Entrance Angle	88.76°	88.76°
Observation Angle	1.05°	1.05°
Retroreflected Luminance* RL [(mcd • ft-2) • fc-1]	300	250

*The quantity of retroreflected luminance (RL) "relates to the way the effective retroreflective surface is focused on the retina of the human eye and to the visual effect thereby produced. It is recommended for describing the performance of highway signs and striping, or large vehicular markings which are commonly viewed as discernible surface areas." Federal Test Method Standard 370, 3.1.2, Note 6, March 1, 1977.

C. Color

The preformed markings consist of white or yellow films with pigments selected and blended to conform to standard highway colors.

D. Skid Resistance

The patterned surface of the retroreflective pliant polymer shall provide an initial minimum skid resistance value of 45 BPN when tested according to ASTM E 303 except values will be taken in one direction and at 45° angle from that direction. These two values will then be averaged to find the skid resistance of the patterned surface.

E. Patchability

Heavy traffic may cause wear and damage. New materials shall be easily installed in these areas with minimal surface preparation by following the manufacturer's recommendations.

PAYMENT: Reflectorized thermoplastic pavement striping material will be paid for at the contract unit price, under:

ITEM NO.	PAY ITEM	PAY UNIT
0010	Four Inch White 270 ES	Package
0020	Eight Inch White 270 ES	Package
0030	Twelve Inch White 270 ES	Package
0040	Four Inch Yellow 271 ES	Package
0050	Twelve Inch Yellow 271 ES	Package

DURABLE, ABRASION-RESISTANT, RETROREFLECTIVE RAISED PAVEMENT MARKERS

DESCRIPTION: This specification describes durable, abrasion-resistant, retroreflective raised pavement markers designed for installation on asphalt and Portland cement concrete road surfaces. The markers shall be designed to provide highly effective, long-life nighttime visibility.

MATERIALS: The marker shall be produced from an engineering polymer selected for superior impact resistance and weatherability. The color of the marker body shall be either neutral white or as specified. The marker shall incorporate an abrasion-resistant, retroreflective element designed to provide long-lasting nighttime visibility. These markers are intended for application directly onto asphalt or Portland concrete pavement surfaces and shall be compatible with commercially available bitumen or epoxy resin adhesives designed for use with raised pavement markers and as recommended by the marker manufacturer. All other adhesives must be tested by the user to determine suitability.

The markers shall be durable, impact and abrasion-resistant, retroreflective raised pavement markers designed for use with longitudinal and gore markings on new and existing roads in non-snow plow regions.

The marker shall be installed by use of a non-toxic, zero V.O.C., preformed thermoplastic adhesive Bundy pad designed to adhere raised pavement markers to the road surface when heated with a torch. (5" x 5", 125-mil thick squares)

The marker shall meet the following specified requirements:

The marker body shall be produced in neutral white or as specified. The color of the retroreflective element shall be white, yellow, red, green or blue as specified.

Dimensions: The typical dimensions of the marker shall be:

Height:	0.625 ± 0.050 in. (15.88 ± 1.27mm)
Width:	4.00 ± 0.50 in. (101.6 ± 12.7mm)
Length:	3.50 ± 0.50 in. (89.2 ± 12.7mm)

The white/red, and yellow/amber markers shall have initial minimum retroreflectance values specified as the product of the values in Table 1 when measured in accordance with ASTM E809. The photometric quantity to be measured is the coefficient of retroreflected luminous intensity (RI), expressed as millicandelas per lux (mcd/lx). One candela per lux equals 10.76 candelas per foot-candle.

Table 1: Minimum RI Values

Entrance angle β_2 ($\beta_1 = 0°$)	0°		±20°	
Observation angle	.2°		.2°	
Color	Minimum R_I (mcd/lx)	Minimum R_I (cd/ftcd)	Minimum R_I (mcd/lx)	Minimum R_I (cd/ftcd)
White	279	3.00	112	1.20
Yellow/Amber	167	1.80	67	0.72
Red	70	0.75	28	0.30
Blue	26	0.28	10	0.11
Green	93	1.00	37	0.40

The markers shall have initial minimum retroreflectance values specified as the product of the values in **Table 2 and Table 3** when measured in accordance with ASTM E809. In **Table 2**, the angles referenced correspond to the entrance, rotation and observation geometry for a driver in a standard vehicle with pavement markers placed on a lane line to the left of the vehicle. The measured value at each simulated distance is the sum of the marker retroreflection from the incident illumination of the left and right headlights. Test set up and measurement geometry is illustrated in **Figure 1**.

Table 2: R_I "Driver Geometry"

Simulated Distance			Observation Angle (α)	Rotation Angle (ε)	Entrance Angle (ß)		Minimum R_I (mcd/lux)	Typical R_I (mcd/lux)
Feet	Meters	Headlight	(degrees)	(degrees)	$ß_1$	$ß_2$	left + right	left + right
100	30	Left	0.95	19	-2.0	-1.6	40	80
		Right	2.91	-72	4.6	-2.9		
300	91	Left	0.35	24	-0.7	-0.5	350	500
		Right	0.90	-69	1.4	-1.0		
500	152	Left	0.22	24	-0.4	-0.3	600	1000
		Right	0.53	-68	0.8	-0.6		

Note: In laboratory testing Entrance Angles $ß_1$ and $ß_2$ are set to equal 0° and Left/Right Rotation Angles ε are set to 20°/-70° as an approximation with little loss of accuracy.

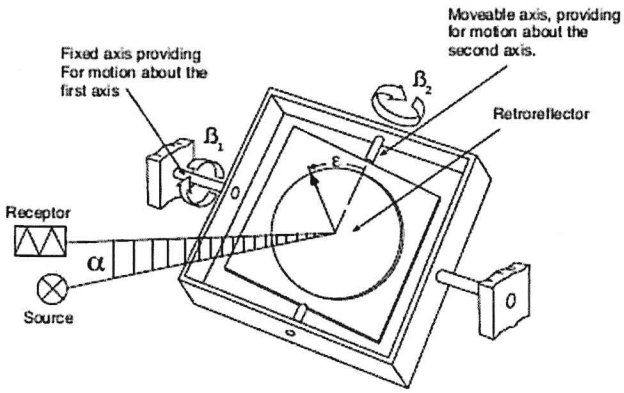

Figure 1: Driver Geometry (CIE Notation)

Table 3:
Color Multiplying Factors

Color	Multiplying Factor
White	1
Yellow/Amber	0.6
Red	0.25
Blue	0.1
Green	0.33

The retroreflected color of the markers shall lie within the respective retroreflected color gamut coordinates, plotted on the 1931 CIE Chromaticity (x,y) diagram, described in Table 4 and Figure 2 when tested in accordance with ASTM E811 using CIE Illuminant Source A and viewing conditions of 0.2° observation angle, 0° entrance angle. The source and receptor angular apertures are each 6 minutes of arc.

Table 4: Retroreflected Color Gamut Coordinates

	White		Yellow		Red		Blue		Green	
Point Number	x	y	x	y	x	y	x	y	x	y
1	0.310	0.348	0.545	0.424	0.650	0.330	0.039	0.320	0.009	0.733
2	0.453	0.440	0.599	0.439	0.668	0.330	0.160	0.320	0.288	0.520
3	0.500	0.440	0.609	0.390	0.734	0.265	0.160	0.240	0.209	0.395
4	0.500	0.380	0.597	0.390	0.721	0.259	0.183	0.218	0.012	0.494
5	0.440	0.380	–	–	–	–	0.088	0.142	–	–
6	0.310	0.283	–	–	–	–	–	–	–	–

If two points lie on the spectrum locus line, they must not be connected by a straight line but rather should, in this case, be joined by the boundary of the spectrum locus.

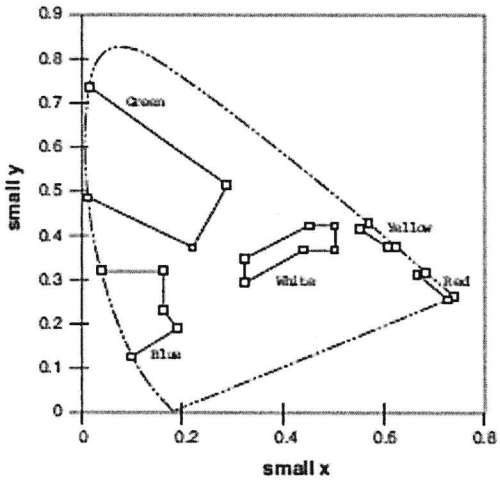

Figure 2: CIE 1931 Chromaticity Chart

The coefficient of retroreflected luminous intensity of the markers is measured after subjecting the entire lens surface to the test described in ASTM D 4280 section 9.5 using a sand drop apparatus. After the exposure described above, retroreflected values shall not be less than 0.5 times the values listed in Table #1.

The marker shall comply with the initial minimum brightness requirements as specified in **Table 1** and the product of the values in **Tables 2 and 3** after conditioning for 12 hours at 145°F ± 5°F (62.7°C ± 2.5°C).

The marker body shall display no cracking or breakage when tested according to ASTM D2444 Tup A, using a 1000 gm weight from a height of 1 meter. The marker shall be positioned in such a way that the Tup strikes the top of the marker. The marker lens shall display no cracking outside the impact area when tested according to ASTM D2444 Tup A, using a 1000 gm weight from a height of 1 meter. The marker shall be placed in a steel fixture designed to hold the marker lens horizontal and positioned such that the Tup strikes the center of the lens.

The markers shall be conditioned for 10 minutes at 145°F ± 5°F (62.7°C ± 2.5°C) and then immediately submerged in a water bath at 70°F ± 5°C (21°F ± 2.5°C) for 10 minutes. The markers should then be removed from the water bath, wiped dry with a soft cloth, visually inspected for penetration of water behind the lens, and measured for reflectivity in accordance with ASTM E809. The markers shall meet the initial minimum retroreflectance specified values in **Table 1** and the product of the values in **Tables 2 and 3.**

The markers shall meet the performance requirements contained in the current ASTM D 4280 for Raised Retro-reflective Pavement Markers. This warranty excludes (without limitation) damage from improper installation, exposure to chemicals or mishandling. Should the marker fail to conform to this warranty, the manufacturer shall, at its expense for materials ONLY, furnish replacement markers for those non-conforming markers. Jefferson Parish Traffic Engineering Division will maintain and track all installation information.

PAYMENT: Raised pavement markers shall be paid for at the contract unit price. Payment will be made under:

ITEM NO.	PAY ITEM	PAY UNIT
0060	White / Red Raised Pavement Marker	Each
0070	Yellow Raised Pavement Marker	Each

DATE: 3/23/2022

BID NO.: 50-00136857

INVITATION TO BID
THIS IS NOT AN ORDER

JEFFERSON PARISH

PURCHASING DEPARTMENT
P.O. BOX 9
GRETNA, LA. 70054-0009
504-364-2678

BUYER: DREAMEY@jeffparish.net

BIDS WILL BE RECEIVED ONLINE VIA WWW.JEFFPARISHBIDS.NET UNTIL 2:00 PM, 4/07/2022 AND PUBLICLY OPENED THEREAFTER IN THE WEST BANK PURCHASING DEPT, SUITE 4400, JEFFERSON PARISH GENERAL GOVERNMENT BUILDING, 200 DERBIGNY STREET, GRETNA, LA 70053. At no charge, bidders are to submit via Jefferson Parish's electronic procurement page by visiting www.jeffparishbids.net to register for this free site. Additional instructions are included in the text box highlighting electronic procurement.

LATE BIDS WILL NOT BE ACCEPTED

NOTE: ONLY BIDS WRITTEN IN INK OR TYPEWRITTEN, AND PROPERLY SIGNED BY A MEMBER OF THE FIRM OR AUTHORIZED REPRESENTATIVE, WILL BE ACCEPTED. PENCIL AND/OR PHOTOSTATIC FIGURES OR SIGNATURES SHALL RESULT IN BID REJECTION. HOWEVER, ELECTRONIC SIGNATURES AS DEFINED IN LSA - R.S. 9:2620(8) ARE ACCEPTABLE. SIGNATURE MUST BE A SECURED DIGITAL SIGNATURE.

INSTRUCTIONS FOR BIDDERS AND GENERAL CONDITIONS

THE FOLLOWING INSTRUCTIONS APPLY TO ALL BIDS

All bids submitted are subject to these instructions and general conditions and any special conditions and specifications contained herein, all of which are made part of this bid proposal reference. By submitting a bid, vendor agrees to comply with all provisions of Louisiana Law as well be in compliance with the Jefferson Parish Code of Ordinances, Louisiana Code of Ethics, applicable Jefferson Parish ethical standards and Jefferson Parish Resolution No. 113646 and/or Resolution No. 113647 as amended.

Jefferson Parish adheres to the Louisiana Code of Governmental Ethics, contained in Louisiana Revised Statutes Annotated, R.S. 42:1101, et seq. Vendor/Proposer by this submission, warrants that there are no "conflicts of interest" related to this procurement that would violate applicable Louisiana Law. Violation of the Louisiana Code of Governmental Ethics may result in rescission of contract, permit or licenses, and the imposition of fines and/or penalties, without contractual liability to the public in accordance with applicable law.

All vendors submitting bids should register as a Jefferson Parish vendor if not already yet registered. Registration forms may be downloaded from http://purchasing.jeffparish.net and by clicking on Vendor Information. Current W-9 forms with respective Tax Identification numbers and vendor applications may be submitted at any time; however, if your company is not registered and/or a current W-9 form is not on file, vendor registration is mandatory. Vendors may experience a delay in payment if your company is not a registered vendor with Jefferson Parish.

All quotations shall be based on F.O.B. Agency warehouse or job site, anywhere within the Parish as designated by the Purchasing Department. This provision does not apply to public works projects

JEFFERSON PARISH requires all products to be new (current) and all work must be performed according to standard practices for the project. Unless otherwise specified, no aftermarket parts will be accepted. Unless otherwise specified, all workmanship and materials must have at least one (1) year guaranty, in writing, from the date of delivery and/or acceptance of the project. Any deviations or alterations from the specifications must be indicated and/or supporting documentation supplied with bid submission.

Bidders should submit all questions in writing via email to the buyer's email address as indicated above, no later than Five (5) working days prior to the bid opening. Bid numbers should be mentioned in all requests. If submitting online, vendors may send questions via the E-Procurement site no later than Five (5) working days prior to the bid opening.

If this bid requires a pre-bid conference (see Additional Requirements section), bidders are advised that such conference will be held to allow bidders the opportunity to identify any discrepancies in the bid specifications and seek further clarification regarding instructions. The Purchasing Department will issue a written response to bidders' questions in the form of an Addendum. Please note that all official communication will be expressed in the form of an addendum.

All formal Addenda require written acknowledgement on the bid form by the bidder. Failure to acknowledge an Addendum on the bid form shall cause the bid to be rejected. JEFFERSON PARISH reserves the right to award bid to next lowest responsive and responsible bidder in this event.

JEFFERSON PARISH will accept one price for each item unless otherwise indicated. Two or more prices for one item will result in bid rejection. Bidders are required to complete, sign and return the bid form and/or complete and return the associated line item pricing forms as indicated. Vendors must not alter the bid forms. Doing so will cause the bid to be rejected.

A corporate resolution or written evidence of the individual signing the bid having such authority must be submitted with the bid. Failure to comply will cause bid to be rejected. For corporate entities, such written evidence may be a printout of the Louisiana Secretary of State's website listing the signatory as an officer. Such printout shall be included with the bid submission. Bids submitted by Owners or Sole Proprietorships must include certification that he or she owns the entity for which the bid is signed. This documentation must be submitted with the bid. Failure to do so will result in bid rejection.

NOTE: A sample corporate resolution can be downloaded from our website http://purchasing.jeffparish.net or you may provide your own document. A sample certification of sole proprietorship can also be downloaded from our website http://purchasing.jeffparish.net or you may provide your own document.

INSTRUCTIONS FOR BIDDERS AND GENERAL CONDITIONS

A. AWARD OF CONTRACT: JEFFERSON PARISH reserves the right to award contracts or place orders on a lump sum or individual item basis, or such combination, as shall in its judgment be in the best interest of JEFFERSON PARISH. Every contract or order shall be awarded to the LOWEST RESPONSIVE and RESPONSIBLE BIDDER, taking into consideration the CONFORMITY WITH THE SPECIFICATIONS and the DELIVERY AND/OR COMPLETION DATE. SPLIT AWARDS MADE TO SEVERAL VENDORS WILL ONLY BE GRANTED TO THOSE DEEMED RESPONSIVE AND RESPONSIBLE.

All bid prices shall remain valid for 45 days. Jefferson Parish and the lowest responsive and responsible bidder(s) by mutual written consent may mutually agree to extend the deadline for award by one (1) or more extensions of thirty (30) calendar days.

PROTESTS: Only those vendors that submit bids in response to this solicitation may protest any element of the procurement, in writing to the Director of the Purchasing Department. Written protest must be received within 48 hours of the release of the bid tabulation by the Purchasing Department. After consultation, the Parish Attorney's Office will then respond to protests in writing. (For more information, please see Chapter 2, Article VII, Division 2, Sec. 2-914.1 of the Jefferson Parish Code of Ordinances.)

PREFERENCE: Unless federal funding is directly spent by Jefferson Parish for this purchase, preference is hereby given to materials, supplies, and provisions produced, manufactured or grown in Louisiana, quality being equal to articles offered by competitors outside the state. "LSA – R.S. 38:2251-2261"

B. USE OF BRAND NAMES AND STOCK NUMBERS: Where brand names and stock numbers are specified, it is for the purpose of establishing certain minimum standards of quality. Bids may be submitted for products of equal quality, provided brand names and stock numbers are specified. Complete product data may be required prior to award.

C. CANCELLATION OF CONTRACT: JEFFERSON PARISH reserves the right to cancel all or any part if not shipped promptly. No charges will be allowed for parking or cartage unless specified in quotation. The order must not be filled at a higher price than quoted. JEFFERSON PARISH reserves the right to cancel any contract at anytime and for any reason by issuing a THIRTY (30) day written notice to the contractor.

For good cause and as consideration for executing a contract with Jefferson Parish, vendor conveys, sells, assigns and transfers to Jefferson Parish or its assigns all rights, title and interest in and to all causes of action it may now or hereafter acquire under the antitrust laws of the United States and the State of Louisiana, relating to the particular good or services purchased or acquired by Jefferson Parish.

D. PRICES: Jefferson Parish is exempt from paying sales tax under LSA-R.S. 47:301 (8)(c). All prices for purchases by Jefferson Parish of supplies and materials shall be quoted in the unit of measure specified and unless otherwise specified, shall be exclusive of state and local taxes. The price quoted for work shall be stated in figures. In the event there is a difference in unit prices and totals, the unit price shall prevail.

Quantities listed are for bidding purposes only. Actual requirements may be more or less than quantities listed.

Bidders are not to exclude from participation in, deny the benefits of, or subject to discrimination under any program or activity, any person in the United States on the grounds of race, color, national origin, or sex; nor discriminate on the basis of age under the Age Discrimination Act of 1975, or with respect to an otherwise qualified handicapped individual as provided in Section 504 of the Rehabilitation Act of 1973, or on the basis of religion, except that any exemption from such prohibition against discrimination on the basis of religion as provided in the Civil Rights Act of 1964, or Title VI and VII of the Act of April 11, 1968, shall also apply. This assurance includes compliance with the administrative requirements of the Revenue Sharing final handicapped discrimination provisions contained in Section 51.55 (c), (d), (e), and (k)(5) of the Regulations. New construction or renovation projects must comply with Section 504 of the 1973 Rehabilitation Act, as amended, in accordance with the American National Standard Institute's specifications (ANSI A17.1-1961).

INSTRUCTIONS FOR BIDDERS AND GENERAL CONDITIONS

Jefferson Parish and its partners as the recipients of federal funds are fully committed to awarding a contract(s) to firm(s) that will provide high quality services and that are dedicated to diversity and to containing costs. Thus, Jefferson Parish strongly encourages the involvement of minority and/or woman-owned business enterprises (DBE's, including MBE's, WBE's and SBE's) to stimulate participation in procurement and assistance programs.

The purpose and intention of this invitation to bid is to afford all suppliers an equal opportunity to bid on all construction, maintenance, repair, operating supplies and/or equipment listed in this bid proposal. JEFFERSON PARISH WILL ACCEPT ONE BID ONLY FROM EACH VENDOR. Items bid must meet specifications.

Advertised bids will be tabulated and a copy of the tabulation will be forwarded to each responding bidder.

IN ACCORDANCE WITH STATE REGULATIONS JEFFERSON PARISH OFFERS ELECTRONIC PROCUREMENT TO ALL VENDORS

This electronic procurement system allows vendors the convenience of reviewing and submitting bids online. This is a secure site and authorized personnel have limited read access only. Bidders are to submit electronically using this free service; while the website accepts various file types, one single PDF file containing all appropriate and required bid documents is preferred. Bidders submitting uploaded images of bid responses are solely responsible for clarity. If uploaded images/documents are not legible, then bidder's submission will be rejected. Please note all requirements contained in this bid package for electronic bid submission.

Please visit our E-Procurement Page at www.jeffparishbids.net to register and view Jefferson Parish solicitations. For more information, please visit the Purchasing Department page at http://purchasing.jeffparish.net.

The general specifications for construction projects and the purchase of materials, services and/or supplies are those adopted by the JEFFERSON PARISH Council by Resolution No. 113646 or 113647 as amended. The general conditions adopted by this resolution shall be considered as much a part of this document as if they were written wholly herein. A copy may be obtained from the Office of the Parish Clerk, Suite 6700, Jefferson Parish General Government Building, 200 Derbigny Street, Gretna, LA 70053.
You may also obtain a copy by visiting the Purchasing Department webpage at http://purchasing.jeffparish.net and clicking on Online Forms.

ADDITIONAL REQUIREMENTS FOR THIS BID

PLEASE MATCH THE NUMBERS PRINTED IN THIS BOX WITH THE CORRESPONDING INSTRUCTIONS BELOW.

10, 12, 13, 15

1. All bidders must attend the MANDATORY pre-bid conference and will be required to sign in and out as evidence of attendance. In accordance with LSA R.S. 38:2212(I), all prospective bidders shall be present at the beginning of the MANDATORY pre-bid conference and shall remain in attendance for the duration of the conference. Any prospective bidder who fails to attend the conference or remain for the duration shall be prohibited from submitting a bid for the project.

2. Attendance to this pre-bid conference is optional. However, failure to attend the pre-bid conference shall not relieve the bidder of responsibility for information discussed at the conference. Furthermore, failure to attend the pre-bid conference and inspection does not relieve the successful bidder from the necessity of furnishing materials or performing any work that may be required to complete the work in accordance with the specification with no additional cost to the owner.

3. Contractor must hold current applicable JEFFERSON PARISH licenses with the Department of Inspection and Code Enforcement. Contractor shall obtain any and all permits required by the JEFFERSON PARISH Department of Inspection and Code Enforcement. The contractor shall be responsible for the payment of these permits. All permits must be obtained prior to the start of the project. Contractor must also hold any and all applicable Federal and State licenses. Contractor shall be responsible for the payment of these permits and shall obtain them prior to the start of the project.

INSTRUCTIONS FOR BIDDERS AND GENERAL CONDITIONS

4. A LA State Contractor's License will be required in accordance with LSA R.S. 37-2150 et. seq. and such license number will be shown on the outside of the bid electronic envelope. Failure to comply will cause the bid to be rejected. When submitting the bid electronically, the license number must be entered in the appropriate field in the electronic procurement system. Failure to comply will cause the bid to be rejected.

5. It is the bidder's responsibility to visit the job site and evaluate the job before submitting a bid.

6. Job site must be clean and free of all litter and debris daily and upon completion of the contract. Passageways must be kept clean and free of material, equipment, and debris at all times. Flammable material must be removed from the job site daily because storage will not be permitted on the premises. Precaution must be exercised at all times to safeguard the welfare of JEFFERSON PARISH and the general public.

7. PUBLIC WORKS BIDS: All awards for public works in excess of $5,000.00 will be reduced to a formal contract which shall be recorded at the contractor's expense with the Clerk of Court and Ex-Officio Recorder of Mortgages for the Parish of Jefferson. A price list of recordation costs may be obtained from the Clerk of Court and Ex-Officio Recorder of Mortgages for the Parish of Jefferson. All awards in excess of $25,000.00 will require both a performance and a payment bond. Unless otherwise stated in the bid specifications, the performance bond requirements shall be 100% of the contract price. Unless otherwise state in the bid specifications, the payment bond requirements shall be 100% of the contract price. Both bonds shall be supplied at the signing of the contract.

8. NON-PUBLIC WORKS BIDS: A performance bond will be required for this bid. The amount of the bond will be 100% of the contract price unless otherwise indicated in the specifications. The performance bond shall be supplied at the signing of the contract.

9. NON-PUBLIC WORKS BIDS: A payment bond will be required for this bid. The amount of the bond will be 100% of the contract price unless otherwise indicated in the specifications. The payment bond shall be supplied at the signing of the contract.

10. All bidders must comply with the requirements stated in the attached "Standard Insurance Requirements" sheet attached to this bid solicitation. Failure to comply with this instruction will result in bid rejection.

11. A bid bond will be required with bid submission in the amount of 5% of the total bid, unless otherwise stated in the bid specifications. All sureties must be in original format (no copies) When submitting a bid online, vendors must submit an electronic bid bond through the respective online clearinghouse bond management system(s) as indicated in the electronic bid solicitation on Central Auction House. No scanned paper copies of any bid bond will be accepted as part of the electronic bid submission.

12. This is a requirements contract to be provided on an as needed basis. JEFFERSON PARISH makes no representations on warranties with regard to minimum guaranteed quantities unless otherwise stated in the bid specifications.

13. Freight charges should be included in total cost when quoting. If not quoted FOB DELIVERED, freight must be quoted as a separate item. Bid may be rejected if not quoted FOB DELIVERED or if freight charges are not indicated on bid form.

14. PUBLIC WORKS BIDS - Completed, Signed and Properly Notarized Affidavits Required; This applies to all solicitations for construction, alteration or demolition of public buildings or projects, in conformity with the provisions contained in LSA-RS 38:2212.9, LSA-RS 38:2212.10, LSA-RS 38:2224, and Sec 2-923.1 of the Jefferson Parish Code of Ordinances. For bidding purposes, all bidders must submit with bid submission COMPLETED, SIGNED and PROPERLY NOTARIZED Affidavits, including: Non-Conviction Affidavit, Non-Collusion Affidavit, Campaign Contribution Affidavit, Debt Disclosures Affidavit and E-Verify Affidavit. For the convenience of vendors, all affidavits have been combined into one form entitled PUBLIC WORKS BID AFFIDAVIT. This affidavit must be submitted in its original format, and without material alteration, in order to be compliant and for the bid to be considered responsive. A scanned copy of the completed, signed and properly notarized affidavit may be submitted with the bid, however, the successful bidder must submit the original affidavit in its original format and without material alteration upon contract execution. Failure to comply will result in the bid submission being rejected as non-responsive. The Parish reserves the right to award bid to the next lowest responsive and responsible bidder in this event.

INSTRUCTIONS FOR BIDDERS AND GENERAL CONDITIONS

15. NON PUBLIC WORK BIDS - Completed, Signed and Properly Notarized Affidavits Required in conformity with the provisions contained in LSA – RS 38:2224 and Sec 2-923.1 of the Jefferson Parish Code of Ordinances. For bidding purposes, all bidders must submit with bid submission COMPLETED, SIGNED and PROPERLY NOTARIZED Affidavits, including: Non-Collusion Affidavit, Debt Disclosures Affidavit and Campaign Contribution Affidavit. For the convenience of vendors, all affidavits have been combined into one form entitled NON PUBLIC WORKS BID AFFIDAVIT. This affidavit must be submitted in its original format, and without material alteration, in order to be compliant and for the bid to be considered responsive. A scanned copy of the completed, signed and properly notarized affidavit may be submitted with the bid, however, the successful bidder must submit the original affidavit in its original format and without material alteration upon contract execution. Failure to comply will result in the bid submission being rejected as non-responsive. The Parish reserves the right to award bid to the next lowest responsive and responsible bidder in this event.

16. The ensuing contract for this bid solicitation may be eligible for FEMA reimbursement and/or Federal funding/reimbursement. As such, the referenced appendix will be applicable accordingly and shall be considered a part of the bid documents. All applicable certifications must be duly completed, signed and submitted with bid submission. Failure to submit applicable certifications with bid submission will result in bid rejection.

17. For this project, the Contractor shall not pay any state or local sales or use taxes on materials and equipment which are affixed and made part of the immovable property of the project or which is permanently incorporated in the project (hereinafter referred to as "applicable materials and equipment."). All purchases of applicable materials or equipment shall be made by the contractor on behalf of and as the agent of Jefferson Parish (Owner), a political subdivision of the State of Louisiana. No state and local sales and use taxes are owed on applicable materials and equipment under the provisions of Act 1029 of the 1991 Regular Session - Louisiana Revised Statute 47:301(8)(c). Owner will furnish to contractor a certificate form which certifies that Owner is not required to pay such state or local sales and use taxes, and contractor shall furnish a copy of such certificate to all vendors or suppliers of the applicable materials and equipment, and report to Owner the amount of taxes not incurred.

It shall be the duty of every parish officer, employee, department, agency, special district, board, and commission: and the duty of every contractor, subcontractor, and licensee of the parish, and the duty of every applicant for certification of eligibility for a parish contract or program, to cooperate with the Inspector General in any investigation, audit, inspection, performance review, or hearing pursuant to JPCO 2-155.10(19). By signing this document, every corporation, partnership, or person contracting with PARISH, whether by cooperative endeavor, intergovernmental agreement, bid, proposal, application or solicitation for a parish contract, and every application for certification of eligibility for a parish contract or program, attests that it understands and will abide by all provisions of JPCO 2-155.10.

See Page 1 for Conflicts of Interest Statement

BID FORM

Non Public Works

All Public Work Projects are required to use the Louisiana Uniform Public Work Bid Form

All prices must be held firm unless an escalation provision is requested in this bid. Jefferson Parish will allow one escalation during the term of the contract, which may not exceed the U.S. Bureau of Labor Statistics National Index for all Urban Consumers, unadjusted 12 month figure. The most recently published figure issued at the time an adjustment is requested will be used. A request must be made in writing by the vendor, and the escalation will only be applied to purchases made after the request is made.

Are you requesting an escalation provision?

YES _____ NO _____

MAXIMUM ESCALATION PERCENTAGE REQUESTED _____%

INITIAL BID PRICES WILL REMAIN FIRM THROUGH THE DATE OF _____.

For the purposes of comparison of bids when an escalation provision is requested, Jefferson Parish will apply the maximum escalation percentage quoted by the bidder to the period to which it is applied in the bid. The initial price and the escalation will be used to calculate the total bid price. It will be assumed,for comparison of prices only, that an equal amount of material or labor is purchased each month throughout the entire contract.

DELIVERY: FOB JEFFERSON PARISH

INDICATE DELIVERY DATE ON EQUIPMENT AND SUPPLIES _____

LOUISIANA CONTRACTOR'S LICENSE NO.: (if applicable) _____

THIS SECTION MUST BE COMPLETED BY BIDDER:

FIRM NAME: _____

ADDRESS: _____

CITY, STATE: _____ ZIP: _____

TELEPHONE: ( ) _____ FAX: ( ) _____

EMAIL ADDRESS: _____

In the event that addenda are issued with this bid, bidders MUST acknowledge all addenda on the bid form.Bidder must acknowledge receipt of an addendum on the bid form by placing the addendum number as indicated. Failure to acknowledge any addendum on the bid form will result in bid rejection.

Acknowledge Receipt of Addenda: NUMBER: _____

NUMBER: _____

NUMBER: _____

NUMBER: _____

TOTAL PRICE OF ALL BID ITEMS: $ _____

AUTHORIZED SIGNATURE: _____ _____

Printed Name

TITLE: _____

SIGNING INDICATES YOU HAVE READ AND COMPLY WITH THE INSTRUCTIONS AND CONDITIONS.

NOTE: All bids should be returned with the BID NUMBER and BID OPENING DATE indicated on the outside of the envelope submitted to the Purchasing Department.

INVITATION TO BID FROM JEFFERSON PARISH - continued

BID NO.: 50-00136857

SEALED BID

ITEM NUMBER	QUANTITY	U/M	DESCRIPTION OF ARTICLES	UNIT PRICE QUOTED	TOTALS
			TWO YEAR CONTRACT FOR A SUPPLY OF 3M PAVEMENT MARKING TAPE.		
1	150.00	PKG	0010 PAVEMENT MARKING TAPE FOUR INCH WHITE THIRTY YARDS PER PACK 3M A270 ES		
2	100.00	PKG	0020 PAVEMENT MARKING TAPE EIGHT INCH WHITE THIRTY YARDS PER PACK 3M A270 ES		
3	40.00	PKG	0030 PAVEMENT MARKING TAPE TWELVE INCH WHITE THIRTY YARDS PER PACK 3M A270 ES		
4	150.00	PKG	0040 PAVEMENT MARKING TAPE FOUR INCH YELLOW THIRTY YARDS PER PACK 3M A271 ES		
5	40.00	PKG	0050 PAVEMENT MARKING TAPE TWELVE INCH YELLOW THIRTY YARDS PER PACK 3M A271 ES		
6	30.00	BX	0060 WHITE/RED RAISED PAVEMENT MARKERS ONE HUNDRED PER BOX SERIES 290		
7	50.00	BX	0070 YELLOW RAISED PAVEMENT MARKERS ONE HUNDRED PER BOX SERIES 290		

CORPORATE RESOLUTION

EXCERPT FROM MINUTES OF MEETING OF THE BOARD OF DIRECTORS OF

_____

INCORPORATED.

AT THE MEETING OF DIRECTORS OF _____
INCORPORATED, DULY NOTICED AND HELD ON _____,
A QUORUM BEING THERE PRESENT, ON MOTION DULY MADE AND SECONDED. IT WAS:

RESOLVED THAT _____, BE AND IS HEREBY APPOINTED, CONSTITUTED AND DESIGNATED AS AGENT AND ATTORNEY-IN-FACT OF THE CORPORATION WITH FULL POWER AND AUTHORITY TO ACT ON BEHALF OF THIS CORPORATION IN ALL NEGOTIATIONS, BIDDING, CONCERNS AND TRANSACTIONS WITH THE PARISH OF JEFFERSON OR ANY OF ITS AGENCIES, DEPARTMENTS, EMPLOYEES OR AGENTS, INCLUDING BUT NOT LIMITED TO, THE EXECUTION OF ALL BIDS, PAPERS, DOCUMENTS, AFFIDAVITS, BONDS, SURETIES, CONTRACTS AND ACTS AND TO RECEIVE ALL PURCHASE ORDERS AND NOTICES ISSUED PURSUANT TO THE PROVISIONS OF ANY SUCH BID OR CONTRACT, THIS CORPORATION HEREBY RATIFYING, APPROVING, CONFIRMING, AND ACCEPTING EACH AND EVERY SUCH ACT PERFORMED BY SAID AGENT AND ATTORNEY-IN-FACT.

I HEREBY CERTIFY THE FOREGOING TO BE A TRUE AND CORRECT COPY OF AN EXCERPT OF THE MINUTES OF THE ABOVE DATED MEETING OF THE BOARD OF DIRECTORS OF SAID CORPORATION, AND THE SAME HAS NOT BEEN REVOKED OR RESCINDED.

_____

SECRETARY-TREASURER

_____

DATE

Non-Public Works Bid
Affidavit Instructions

- **Affidavit is supplied as a courtesy to Affiants, but it is the responsibility of the affiant to insure the affidavit they submit to Jefferson Parish complies, in both form and content, with federal, state and parish laws.**
- **Affidavit must be signed by an authorized representative of the entity or the affidavit will not be accepted.**
- **Affidavit must be notarized or the affidavit will not be accepted.**
- **Notary must sign name, print name, and include bar/notary number, or the affidavit will not be accepted.**
- **Affiant MUST select either A or B when required or the affidavit will not be accepted.**
- **Affiants who select choice A must include an attachment or the affidavit will not be accepted.**
- **If both choice A and B are selected, the affidavit will not be accepted.**
- **Affidavit marked N/A will not be accepted.**
- **It is the responsibility of the Affiant to submit a new affidavit if any additional campaign contributions are made after the affidavit is executed but prior to the time the council acts on the matter.**

Instruction sheet may be omitted when submitting the affidavit

Non-Public Works Bid

AFFIDAVIT

STATE OF _____

PARISH/COUNTY OF _____

BEFORE ME, the undersigned authority, personally came and appeared: _____ _____, (Affiant) who after being by me duly sworn, deposed and said that he/she is the fully authorized _____ of _____ (Entity), the party who submitted a bid in response to Bid Number _____, to the Parish of Jefferson.

Affiant further said:

Campaign Contribution Disclosures

(Choose A or B, if option A is indicated please include the required attachment):

Choice A _____ Attached hereto is a list of all campaign contributions, including the date and amount of each contribution, made to current or former elected officials of the Parish of Jefferson by Entity, Affiant, and/or officers, directors and owners, including employees, owning 25% or more of the Entity during the two-year period immediately preceding the date of this affidavit or the current term of the elected official, whichever is greater. Further, Entity, Affiant, and/or Entity Owners have not made any contributions to or in support of current or former members of the Jefferson Parish Council or the Jefferson Parish President through or in the name of another person or legal entity, either directly or indirectly.

Choice B _____ there are **NO** campaign contributions made which would require disclosure under Choice A of this section.

Debt Disclosures

(Choose A <u>or</u> B, if option A is indicated please include the required attachment):

Choice A _____ Attached hereto is a list of all debts owed by the affiant to any elected or appointed official of the Parish of Jefferson, and any and all debts owed by any elected or appointed official of the Parish to the Affiant.

Choice B _____ There are **<u>NO</u>** debts which would require disclosure under Choice A of this section.

Affiant further said:

That Affiant has employed no person, corporation, firm, association, or other organization, either directly or indirectly, to secure the public contract under which he received payment, other than persons regularly employed by the Affiant whose services in connection with the construction, alteration or demolition of the public building or project or in securing the public contract were in the regular course of their duties for Affiant; and

[*The remainder of this page is intentionally left blank.*]

That no part of the contract price received by Affiant was paid or will be paid to any person, corporation, firm, association, or other organization for soliciting the contract, other than the payment of their normal compensation to persons regularly employed by the Affiant whose services in connection with the construction, alteration or demolition of the public building or project were in the regular course of their duties for Affiant.

_____
Signature of Affiant

_____
Printed Name of Affiant

SWORN AND SUBSCRIBED TO BEFORE ME
ON THE _____ DAY OF _____, 20___.

_____
Notary Public

_____
Printed Name of Notary

_____
Notary/Bar Roll Number

My commission expires _____.

STANDARD INSURANCE REQUIREMENTS FOR BIDDING PURPOSES

All required insurance under this bid shall conform to Jefferson Parish Resolution No. 113646 or No. 113647, as applicable. Contractors may not commence any work under any ensuing contract unless and until all required insurance and associated evidentiary requirements thereto have been met, along with any additional specifications contained in the **Invitation to Bid**. Except as where otherwise precluded by law, the Parish Attorney or his designee, with the concurrence of the Director of Risk Management or his designee, may agree on a case-by-case basis, to deviate from Jefferson Parish's standard insurance requirements, as provided in this Section. Vendors requesting deviation therefrom shall submit such requests in writing, along with compelling substantiation, to the Purchasing Department prior to the bid's due date. Any changes to the insurance requirements will be reflected in the bid specifications and addenda. Prior to contract execution and at all times thereafter during the term of such contract, contractors must provide and continuously maintain all coverages as required by the foregoing Resolutions, and the contract documents. Failure to do so shall be grounds for suspension, discontinuation or termination of the contract.

For bidding purposes, bidders must submit with bid submission a current (valid) insurance certificate evidencing the required coverages. Failure to comply will cause bid to be rejected. The current insurance certificate will be used for proof of insurance at time of evaluation. Thereafter, and prior to contract execution, the low bidder will be required to provide final insurance certificates to the Parish which shall name **the Jefferson Parish, its Districts Departments and Agencies under the direction of the Parish President and the Parish Council** as additional insureds regarding negligence by the contractor for the Commercial General Liability and the Comprehensive Automobile Liability policies. Additionally, said certificates should reflect the name of the Parish Department receiving goods and services and reference the respective Jefferson Parish bid number.

JEFFERSON PARISH REQUIRED STANDARD INSURANCE

☑ **WORKER'S COMPENSATION INSURANCE**

As required by Louisiana State Statute, exception; Employer's Liability, Section B shall be $1,000,000 per occurrence when Work is to be over water and involves maritime exposures to cover all employees not covered under the State Worker's Compensation Act, otherwise this limit shall be no less than $500,000 per occurrence.

Note: If your company is not required by law to carry workmen's compensation insurance, i.e. not a Louisiana company, sole employee of the company, then bidders must request a workmen's compensation insurance declaration affidavit prior to the bid opening date. This insurance declaration affidavit must be fully completed, signed, properly notarized and submitted with the bid. A scanned copy may be submitted with the bid; however, the successful bidder must submit the original affidavit in its original format and without material alteration upon contract execution. Failure to comply will result in the bid submission being

rejected as non-responsive. The Parish reserves the right to award bid to the next lowest responsive and responsible bidder in this event.

☑ **COMMERCIAL GENERAL LIABILITY**

Shall provide limits not less than the following: $1,000,000.00 Combined Single Limit per Occurrence for bodily injury and property damage.

☑ **COMPREHENSIVE AUTOMOBILE LIABILITY**

Bodily injury liability $1,000,000.00 each person; $1,000,000.00 each occurrence. Property Damage Liability $1,000,000.00 each occurrence.

Note: This category may be omitted if bidders do not/will not utilize company vehicles for the project or do not possess company vehicles. Bidder must request an automobile insurance declaration affidavit prior to the bid opening date. This insurance declaration affidavit must be fully completed, signed, properly notarized and submitted with the bid. A scanned copy of the completed, signed and properly notarized affidavit may be submitted with the bid; however, the successful bidder must submit the original affidavit in its original format and without material alteration upon contract execution. Failure to comply will result in the bid submission being rejected as non-responsive. The Parish reserves the right to award bid to the next lowest responsive and responsible bidder in this event.

DEDUCTIBLES - The Parish Attorney with concurrence of the Director of Risk Management have waived the deductible section of the Terms and Conditions for all Invitations to Bid, until further notice.

UMBRELLA LIABILITY COVERAGE

An umbrella policy or excess may be used to meet minimum requirements.

FOR CONSTRUCTION AND RENOVATION PROJECTS:

The following are required if selected below. Such insurance is due upon contract execution.

☐ **OWNER'S PROTECTIVE LIABILITY**

To be for the same limits of liability for bodily injury and property damage liability established for commercial general liability.

☐ **BUILDER'S RISK INSURANCE**

The contractor shall maintain Builder's Risk Insurance at his own expense to insure both the owner (Parish of Jefferson) and contractor as their interest may appear.