UNIVERSITY of LOUISIANA LAFAYETTE **INVITATION TO BID** **SOLICITATION FILE No.: 22019** **TITLE: SS CAGE RACKS AND ACCESSORIES** **BID DUE DATE/TIME: Tuesday, October 26, 2021 2:00PM** **ZOOM BID OPENING: Wednesday, October 27, 2021 10:00AM** **MEETING ID: 977 0655 4880** **PASSWORD: 788 963**	**SUBMIT BID TO:*** **University of Louisiana at Lafayette** **Office of Purchasing** **ULLafayetteBids@louisiana.edu** **To maintain the integrity of the bid process, please do not cc any other University email address when submitting your bid.** **BUYER OF RECORD: Roxanne J. Formeller** **BUYER PHONE: (337) 482-2955** **EMAIL: roxanne.formeller@louisiana.edu**

General Instructions to Bidders – *Revised August 20, 2021*

1. Hard copies of sealed bids will no longer be accepted. All bids must be received electronically by the due date and time to be considered.
2. Sealed bids for furnishing the items and/or services specified are hereby solicited, and will be received by the issuing UL Lafayette Campus/Department at the "Submit Bid To" address stated above, until the specified due date and time. Bidder is solely responsible for the timely delivery of bid. The Purchasing Office is not responsible for any delays.
3. Bid submissions must be signed by a person authorized to bind the vendor. In accordance with Louisiana R.S. 39:1594, the person signing the bid must be: (1) any corporate officer listed on the most current annual report on file with the secretary of state, or the signature on the bid is that of any member of a partnership or partnership in commendam listed in the most current partnership records on file with the secretary of state; or (2) an authorized representative of the corporation, partnership, or other legal entity and the Bidder submits or provides upon request a corporate resolution, certification as to the corporate principal, or other documents indicating authority which are acceptable to the public entity, including registration on an electronic Internet database maintained by the public entity; or (3) entity has filed in the appropriate records of the secretary of state in which the public entity is located, an affidavit, resolution, or other acknowledged or authentic document indicating the names of all parties authorized to submit bids for public contracts.
4. When bid is submitted by email, **the subject line must show the Solicitation/File No.** and submission must be received by bid deadline.
5. Read the entire solicitation, including all terms, conditions and specifications.
6. All bid information and prices must be typed or written in ink. Any corrections, erasures or other forms of alteration to unit prices are to be initialed by the Bidder.
7. Bid prices shall include all delivery charges paid by the vendor, F.O.B. UL Lafayette Destination, unless otherwise provided in the solicitation. Any invoiced delivery charges not quoted and itemized on the UL Lafayette purchase order are subject to rejection and non-payment.
8. Payment terms: Net 30 after receipt of properly executed invoice or delivery and acceptance, whichever is later.
9. By signing this solicitation, the Bidder certifies compliance with all general instructions to Bidders, terms, conditions and specifications; and further certifies that this bid is made without collusion or fraud.
10. MANDATORY bid requirements are detailed immediately following the Standard Terms & Conditions section.
11. There will be no pre-bid meeting for this solicitation.
12. Quantities are approximate and NOT guaranteed. These bid results may be used to place additional orders totaling up to 50% more than the initial quantity ordered through June 30, 2022.

These standard terms and conditions shall apply to all UL Lafayette solicitations, unless otherwise specifically amended and provided for in the special terms and conditions, specifications, or other solicitation documents. In the event of conflict between the General Instructions to Bidders or Standard Terms & Conditions and the Special Terms & Conditions, the Special Terms & Conditions shall govern.

Bids submitted are subject to provisions of the laws of the State of Louisiana, including but not limited to: the Louisiana Procurement Code (R.S. 39:1551-1736); Purchasing Rules and Regulations (Title 34 of the Louisiana Administrative Code); Executive Orders; and the terms, conditions, and specifications stated in this solicitation.

1. Bid Delivery and Receipt

   To be considered, Bidders may submit bids electronically to ULLafayetteBids@louisiana.edu. When bid is submitted by email, the subject line must show the Solicitation/File No. and must be received by bid deadline.

   Bidders are advised that the U.S. Postal Service does not make deliveries to the Purchasing Office. Bids will no longer be accepted by mail or in person. Bidder is solely responsible for the timely delivery of its bid, and failure to meet the bid due date and time shall result in rejection of the bid.

2. Bid Forms

   Bids are to be submitted on and in accordance with the UL Lafayette solicitation forms provided, and must be signed by an authorized agent of the vendor. Bids submitted on other forms or in other price formats may be considered informal and may be rejected in part or in its entirety. Bids submitted in pencil and/or bids containing no original signature indicating the Bidder's intent to be bound will not be accepted.

3. Interpretation of Solicitation/Bidder Inquiries

   If Bidder is in doubt as to the meaning of any part or requirement of this solicitation, Bidder may submit a written request for interpretation to the Buyer-of-Record at the email address on page 1 of this solicitation. Written inquiries must be received in the UL Lafayette Office of Purchasing no later than five (5) calendar days prior to the opening of bids, and shall be clearly cross-referenced to the relevant solicitation/specification in question.

   No decisions or actions shall be executed by any Bidder as a result of oral discussions with any UL Lafayette employee or consultant. Any interpretation of the documents will be made by formal addendum only, issued by the UL Lafayette Office of Purchasing, and mailed or delivered to all Bidders known to have received the solicitation. UL Lafayette shall not be responsible for any other interpretations or assumptions made by Bidder.

4. Bid Opening

   In-person bid openings have been suspended for the foreseeable future. Bidders may attend the public bid opening of sealed bids and proposals conducted on Zoom. No information or opinions concerning the ultimate contract award will be given at bid opening or during the evaluation process. Written bid tabulations will not be furnished. Bids may be examined within 72 hours after bid opening. Information pertaining to completed files may be secured by submitting a written request to the Buyer-of-Record at the email address shown in header.

5. Special Accommodations

   Any "qualified individual with a disability" as defined by the Americans with Disabilities Act, who has submitted a bid and desires to attend the public bid opening, must notify the UL Lafayette Office of Purchasing in writing not later than seven days prior to the bid opening date of their need for special accommodations. If the request cannot be reasonably provided, the individual will be informed prior to the bid opening.

6. Standards of Quality

   Any product or service bid shall conform to all applicable federal, state and local laws and regulations, and the specifications contained in the solicitation. Any manufacturer's name, trade name, brand name, or catalog number used in the specification is for the purpose of describing the standard of quality, performance, and characteristics desired; and is not intended to limit or restrict competition. Bidder must specify the brand and model number of the product offered in his bid. Bids not specifying brand and model number shall be considered as offering the exact product specified in the solicitation.

7. New Products/Warranty/Patents

   All products bid for purchase must be new, never previously used, of the manufacturer's current model and/or packaging, and of best quality as measured by acceptable trade standards. No remanufactured, demonstrator, used or irregular products will be considered for purchase unless otherwise specified.

   The manufacturer's standard published warranty and provisions shall apply, unless more stringent warranties are otherwise required by UL Lafayette and specified in the solicitation. In such cases, the Bidder and/or manufacturer shall honor the specified warranty requirements, and bid prices shall include any premium costs of such coverage.

Bidder guarantees that the products proposed and furnished will not infringe upon any valid patent or trademark; and shall, at its own expense, defend any and all actions or suits charging such infringement, and shall save UL Lafayette harmless.

8. Descriptive Information

Bidders proposing an equivalent brand or model are to submit descriptive information (such as literature, technical data, illustrations, etc.) sufficient for UL Lafayette to evaluate quality, suitability, and compliance with the specifications with the bid submission. Failure to submit descriptive information may cause bid to be rejected. Any changes made by Bidder to a manufacturer's published specifications shall be verifiable by the manufacturer. If items bid do not fully comply with specifications, Bidder must state in what respect items deviate. Bidder's failure to note exceptions in its bid will not relieve the Bidder from supplying the actual products requested.

9. Bids/Prices/F.O.B. Point

- The bid price for each item is to be quoted on a "net" basis and F.O.B. UL Lafayette Destination, i.e. title passing upon receipt and inclusive of all delivery charges, any item discounts, etc.
- Bids other than F.O.B. UL Lafayette Destination may be rejected.
- Bids indicating estimated freight charges may be rejected.
- Bids requiring deposits, payment in advance, or C.O.D. terms may be rejected.
- Bidders who do not quote "net" item prices and who separately quote an overall "lump sum" freight cost or discount for all items shall be considered as submitting an "all-or-none" bid for evaluation and award purposes; and risk rejection if award is made on an item basis.
- Prices shall be firm for acceptance for a minimum of 30 days, unless otherwise specified. Bids conditioned with shorter acceptance periods may be rejected.
- Prices are to be quoted in the unit/packaging specified (e.g. each, 12/box, etc), or may be rejected.
- In the event of extension errors, the unit price bid shall prevail.

13. Taxes

Vendor is responsible for including all applicable taxes in the bid price. UL Lafayette is exempt from all Louisiana state and local sales and use taxes. By accepting an award, resident and non-resident firms acknowledge their responsibility for the payment of all taxes duly accessed by the State of Louisiana and its political subdivisions for which they are liable, including but not limited to: franchise taxes, privilege taxes, sales taxes, use taxes, ad valorem taxes, etc.

11. Terms and Conditions

This solicitation contains all terms and conditions with respect to the purchase of the goods and/or services specified herein. Submittal of any contrary terms and conditions may cause your bid to be rejected. By signing and submitting a bid, vendor agrees that contrary terms and conditions which may be included in its bid are nullified; and agrees that this contract shall be construed in accordance with this solicitation and governed by the laws of the State of Louisiana.

12. Vendor Forms/ UL Lafayette Signature Authority

The terms and conditions of the UL Lafayette solicitation, purchase order and contract shall solely govern the purchase agreement, and shall not be amended by any vendor contract, form, etc.

The University's Vice President of Administration and Finance, chief procurement officer, or authorized designee, is delegated sole authority to execute/sign any vendor contracts, forms, etc., on behalf of UL Lafayette. Departments are expressly prohibited from signing any vendor forms.

Any such vendor contracts/forms bearing unauthorized signatures shall be null and void, shall have no legal force, and shall not be recognized by UL Lafayette in any dispute arising therefrom. Vendors who present any such forms to department users for signature without regard to this strict UL Lafayette policy may face contract cancellation, suspension, and/or debarment.

13. Awards

The intent is to award this bid on an all-or-none basis to the lowest responsible and responsive Bidder. UL Lafayette reserves the right: (1) to award items separately, grouped, or on an all-or-none basis, as deemed in its best interest; (2) to reject any or all bids and/or items; and (3) to waive any informalities.

All solicitation specifications, terms and conditions shall be made part of any subsequent award as if fully reproduced and included therein, unless specifically amended in the formal contract.

14. Acceptance of Bid

Only the issuance of an official UL Lafayette purchase order, contract, Notification of Award letter, or a Notification of Intent to Award letter shall constitute the University's acceptance of a bid. UL Lafayette shall not be responsible in any way to a vendor for goods delivered or services rendered without an official purchase order and/or contract.

15. Applicable Law
All contracts shall be construed in accordance with and governed by the laws of the State of Louisiana.

16. Awarded Products/Unauthorized Substitutions
Only those awarded brands and numbers stated in the UL Lafayette contract are approved for delivery, acceptance, and payment purposes. Any substitutions must be reviewed and approved by the UL Lafayette Office of Purchasing prior to awarding the contract. Unauthorized product substitutions are subject to rejection at time of delivery, post-return at vendor's expense, and non-payment.

17. Testing/Rejected Goods
Vendor warrants that the products furnished will be in full conformity with the specification, drawing or sample, and agrees that this warranty shall survive delivery, acceptance, and use. Any defect in any product may cause its rejection. UL Lafayette reserves the right to test products for conformance to specifications both prior to and after any award. Vendor shall bear the cost of testing if product is found to be non-compliant. All rejected goods will be held at vendor's risk and expense, and subject to vendor's prompt disposition. Unless otherwise arranged, rejected goods will be returned to the vendor freight collect.

18. Delivery
Vendor is responsible for making timely delivery in accordance with its quoted delivery terms. Vendor shall promptly notify the UL Lafayette Department and/or UL Lafayette Office of Purchasing of any unforeseen delays beyond its control. In such cases, UL Lafayette reserves the right to cancel the order and to make alternative arrangements to meet its needs.

19. Default of Vendor
Failure to deliver within the time specified in the bid/award will constitute a default and may be cause for contract cancellation. Where the University has determined the vendor to be in default, UL Lafayette reserves the right to purchase any or all goods or services covered by the contract on the open market and to surcharge the vendor with costs in excess of the contract price. Until such assessed surcharges have been paid, no subsequent bids from the defaulting vendor will be considered for award.

20. Vendor Invoices
Invoices shall reference the UL Lafayette purchase/release order number, vendor's packing list/delivery ticket number, shipping/delivery date, etc. Invoices are to be itemized and billed in accordance with the order, show the amount of any prompt payment discount, and submitted on the vendor's own invoice form. Invoices submitted by the vendor's supplier are not acceptable.

21. Delinquent Payment Penalties
Delinquent payment penalties are mandated and governed by Louisiana R.S. 39:1695. Vendor penalties to the contrary shall be null and void, shall have no legal force, and shall not be recognized by UL Lafayette in any dispute arising therefrom.

22. Assignment of Contract/Contract Proceeds
Vendor shall not assign, sublet or transfer its contractual responsibilities, or payment proceeds thereof, to another party without the prior written consent and approval of the UL Lafayette Office of Purchasing. Unauthorized assignments of contract or assignments of contract proceeds shall be null and void, shall have no legal force, and shall not be recognized by UL Lafayette in any dispute arising therefrom.

23. Contract Cancellation/Termination
UL Lafayette has the right to cancel any contract for cause, in accordance with purchasing rules and regulations, including but not limited to: (1) failure to deliver within the time specified in the contract; (2) failure of the product or service to meet specifications, conform to sample quality or to be delivered in good condition; (3) misrepresentation by the vendor; (4) fraud, collusion, conspiracy or other unlawful means of obtaining any contract with the University; (5) conflict of contract provisions with constitutional or statutory provisions of state or federal law; (6) any other breach of contract.
UL Lafayette has the right to cancel any contract for convenience at any time by giving thirty (30) days written notice to the vendor. In such cases, the vendor shall be entitled to payment for compliant deliverables in progress.

24. Prohibited Contractual Arrangements
Per Louisiana R.S. 42:1113.A, no public servant, or member of such a public servant's immediate family, or legal entity in which he has a controlling interest shall bid on or enter into any contract, subcontract, or other transaction that is under the supervision or jurisdiction of the agency of such public servant. See statute for complete law, exclusions, and provisions.

25. Equal Employment Opportunity Compliance
By submitting and signing this bid, vendor agrees to abide by the requirements of the following as applicable: Title VI and VII of the Civil Rights Act of 1964, as amended by the Equal Opportunity Act of 1972; federal Executive Order 11246; federal Rehabilitation Act of 1973, as amended; the Vietnam Era Veteran's Readjustment Assistance Act of 1974; Title IX of the Education Amendments of 1972; the Age Act of 1975; the Americans with Disabilities Act of 1990. Vendor agrees not to discriminate in its employment practices, and will render services under any contract entered into as a result of this solicitation without regard to race, color,

religion, sex, age, national origin, veteran status, political affiliation, handicap, disability, or other non-merit factor. Any act of discrimination committed by vendor, or failure to comply with these statutory obligations when applicable, shall be grounds for termination of any contract entered into as a result of this solicitation.

26. Mutual Indemnification

Each party hereto agrees to indemnify, defend, and hold the other, its officers, directors, agents and employees harmless from and against any and all losses, liabilities, and claims, including reasonable attorney's fees arising out of or resulting from the willful act, fault, omission, or negligence of the indemnifying party or of its employees, contractors, or agents in performing its obligations under this agreement, provided however, that neither party hereto shall be liable to the other for any consequential damages arising out of its willful act, fault, omission, or negligence.

27. Certification of No Suspension or Debarment

By signing and submitting this bid, Bidder certifies that its company, any subcontractors, or principals thereof, are not suspended or debarred under federal or state laws or regulations. A list of parties who have been suspended or debarred by federal agencies is maintained by the General Services Administration and can be viewed on the internet at www.epls.gov.

28. Substitution of Personnel

If applicable, the University intends to include in any contract resulting from this ITB the following condition:

Substitution of Personnel: If, during the term of the contract, the Contractor or subcontractor cannot provide the personnel as proposed and requests a substitution, that substitution shall meet or exceed the requirements stated herein. A detailed resume of qualifications and justification is to be submitted to the University for approval prior to any personnel substitution. It shall be acknowledged by the Contractor that every reasonable attempt shall be made to assign the personnel listed in the Contractor's bid.

29. Insurance Requirements

Please note attached insurance requirements section included in these bid specifications.

If applicable to the services procured in this solicitation, the successful Bidder will be required to furnish a certificate of insurance evidencing required coverages and naming the University of Louisiana at Lafayette as an additional insured on all liability policies.

30. Nonperformance

Successful Bidder is required to perform in strict accordance with all contract specifications, terms, and conditions. Successful Bidder will be advised in writing of nonperformance issues and shall be required to promptly implement corrective actions to ensure contract compliance and to prevent recurrences. In the event the successful Bidder is issued three or more complaints of nonperformance, UL Lafayette reserves the right at its sole discretion to cancel the contract with a ten (10) day written notice. Contract cancellations due to nonperformance may be cause to deem vendor non-responsible in future solicitations.

31. Official University Recognized Holidays

The following is a list of officially recognized University Holidays:

New Year's Day	July 4th
Martin Luther King Day	Labor Day
Mardi Gras Day	Thanksgiving Day
Good Friday	Acadian Day
Memorial Day	Christmas Day
Juneteenth	

32. No Smoking Campus

The Successful Bidder shall be responsible for compliance with all University policies, security measures and vehicle regulations. Specifically, the University is a NO SMOKING campus and all prospective Bidders are cautioned that smoking will not be permitted inside or outside on ANY part of this facility at any time. Any employee who is found to be in violation of this policy will be subject to immediate dismissal.

33. Non-Exclusivity

This agreement is non-exclusive and shall not in any way preclude UL Lafayette from entering into similar agreements and/or arrangements with other Vendors or from acquiring similar, equal, or like goods and/or services from other entities or sources.

34. Contract Amendments

Requests for contract changes must be made in writing by an authorized agent/signatory of the Vendor and submitted to UL Lafayette Office of Purchasing for prior approval. Requests shall include detailed justification and supporting documentation for the proposed amendment.

Contract revisions shall be effective only upon approval by UL Lafayette Office of Purchasing and issuance of a formal UL Lafayette Contract Amendment. The Vendor shall honor purchase orders issued prior to the approval of any contract amendment as applicable.

35. Term of Contract

The duration of this Contract commences from the date specified herein or date of award notification and continues until University accepts final delivery of all deliverables. Total initial contract period not to exceed Twelve (12) months.

Based upon mutual agreement between the University and the successful Bidder, this contract may be extended for four (4) additional twelve (12) month periods under the same terms. Both parties must agree to any extension, and a decision will be made at each twelve (12) month interval.

All terms of the solicitation shall be firm for the duration of Contract.

36. Notification of Fund Appropriation

The continuation of this contract is contingent upon the appropriation of funds to fulfill the requirements of the contract by the Legislature. If the Legislature fails to appropriate sufficient monies to provide for the continuation of the contract or if such appropriation is reduced by the veto of the Governor or by any means provided in the Appropriations Act to prevent the total appropriations for the year from exceeding revenues for that year or for any lawful purpose and the effect of such reduction is to provide insufficient monies for the continuation of the contract, the contract shall terminate on the date of the beginning of the first fiscal year for which funds are not appropriated.

All Bidders should be aware that our Legislative process is such that it is often impossible to give prior notice of the non-appropriation of funds.

37. Number of Bid Response Copies

Each Bidder must submit one (1) signed original bid to the Office of Purchasing at the mailing address specified in this solicitation document. The original must CONTAIN ORIGINAL SIGNATURES of those company officials or agents duly authorized to sign on behalf of the organization. Bidders may be required to mail in the original documents upon award.

38. PROHIBITION OF DISCRIMINATORY BOYCOTTS OF ISRAEL

In accordance with LA R.S. 39:1602:1, for any contract for $100,000 or more and for any contractor with five or more employees, Contractor, or any Subcontractor, shall certify it is not engaging in a boycott of Israel, and shall, for the duration of this contract, refrain from a boycott of Israel.

The State reserves the right to terminate this contract if the Contractor, or any Subcontractor, engages in a boycott of Israel during the term of the contract.

39. PRE-BID MEETING

There will be no pre-bid meeting associated with this solicitation.

40. SITE VISIT/CONTACT INFORMATION

It is the responsibility of the prospective bidder to visit and examine the jobsite, take measurements to his/her own satisfaction and determine conditions under which work is to be done. Owner will not accept responsibility for conditions which careful examination of premises would have shown existed.

There is no loading dock at the delivery site, New Iberia Research Center/Central Receiving.

To visit jobsite and for further information, prospective bidder is to contact Alexander Zoulin 337-482-0348.

MANDATORY BID REQUIREMENTS - *Revised August 20, 2021*

Failure to meet all of the listed mandatory requirements will result in rejection of bid without further consideration.

1. **CERTIFICATION STATEMENT**
   The Bidder **must** sign and include the Certification Statement as set forth in solicitation document. The signature of Bidder's Authorized Representative **must be an ORIGINAL signature -** not a typed/electronic signature. Documents signed in the DocuSign™ program are the only exceptions to this policy.

2. **BID SHEET/FORM**
   The Bidder must submit bid on the form herein provided. The proposal must be signed in ink, and blank space(s) should be filled in for every applicable blank in the UNIT PRICE and EXTENDED TOTAL column. Items left blank will not be awarded to that bidder. It is not necessary to bid on all items. However, if you are not bidding on a particular item, or find a blank that is not applicable to your submission, write "NO BID" or "N/A" in the provided space(s). The Bidder must state the UNIT price (written in ink or typewritten) for each item and shall show the total amount for each item based on the quantities listed.

3. **BIDDER QUALIFICATIONS**
   See pages 8 and 11 of this document for information about required documentation to proving qualifications. This documentation must be received **with** your bid submission or will result in rejection of the same unless otherwise qualifying to omit from your company's bid submission.

CONTACT INFORMATION

ELECTRONIC BID SUBMISSIONS (ONLY) *Do not email questions about the bid to this email address.*

ULLafayetteBids@louisiana.edu

Be sure to include the solicitation number in the subject line.

Do not *send your submission to any other University email address.*

QUESTIONS/CONCERNS ABOUT SPECIFICATIONS

purchasing@louisiana.edu
roxanne.formeller@louisiana.edu

Do not *email bid submissions to either of these addresses.*

To contact Purchasing by phone: 337.482.2955.

CAMPUS DELIVERIES

The campus is not fully open for receiving deliveries by courier at this time. Please send samples or other associated documents via US Mail only when a hard copy is requested or deemed necessary. The UL Post Office (located inside the Student Union) will accept bid packages with proper postage to place in the Purchasing Department's mailbox. The phone number is 337.482.6113.

DEFINITIONS

Agent - The University's representative in the Facility Management who is referred to throughout these documents as singular in number.

Contractor - The person/company who contracts with UL Lafayette to perform the work as called for on these documents who is referred to as singular in number.

Owner - The University of Louisiana at Lafayette (UL Lafayette)

GENERAL SPECIFICATIONS

THE PURPOSE OF THIS SOLICITATION IS TO PROCURE A MINIMUM OF 54 NON-HUMAN PRIMATE CAGE RACK FRAMES FOR MOUNTING 4.3 SQUARE FOOT CAGES AT THE NEW IBERIA RESEARCH CENTER, LOCATED ON THE UNIVERSITY OF LOUISIANA AT LAFAYETTE CAMPUS, NEW IBERIA, LOUISIANA, IN STRICT ACCORDANCE WITH THE REQUIREMENTS IN THESE BID SPECIFICATIONS…

SCOPE OF WORK

The project consists of a minimum of 54 cage rack frames, to support existing wall mount caging. It is the intent of these specifications that the Manufacturer furnishes and assembles all components, as necessary to deliver a working animal containment enclosure rack frame.

1) With bid package:
   a) Bidder shall submit proposed detailed three-dimensional (3D) drawings, to include material size, type and gauges. This may be used to award bid, failure to do so is sufficient to reject bid.

   b) Bidder shall submit experience resume. This may be used to award bid, failure to do so is sufficient to reject bid.

   c) Bidder shall submit a task schedule delineating time requirements for project design, prototype submittal and approval, manufacturing, and assembly. This may be used to award bid, failure to do so is sufficient to reject bid.

2) Manufacturer is responsible for all final measurements.

3) Manufacturer shall submit detailed shop drawings for cage frame design to Agent for approval, within ten (10) calendar days of receipt of Order.

4) Manufacturer must obtain prototype approval from Agent, prior to proceeding with production of the remaining cage rack frames.*

5) Manufacturer shall coordinate and provide all required shipping and handling of caging as necessary for the completion of cage rack frame order(s).

DUE TO THE IMPORTANCE OF THE SCHEDULE, FOLLOWING RECEIPT OF WRITTEN PROTOTYPE APPROVAL, DELIVERY OF THE FULL ORDER SHALL BE WITHIN SIXTY (60) WORKING DAYS.

IF ADDITIONAL UNITS ARE ORDERED, DELIVERY OF SAID UNITS WILL BE EXPECTED WITHIN SIXTY (60) WORKING DAYS OF CHANGE ORDER.

DELAYS IN RECEIVING ORDERED MATERIALS AND SUPPLIES, EXCEPT THOSE CAUSED BY UNIVERSITY CHANGES, SHALL NOT RELIEVE THE CONTRACTOR FROM COMPLETING PROJECT BY STATED COMPLETION TIME.

DETAILED SPECIFICATIONS

This solicitation is for a minimum of 54 non-human primate housing unit cage rack frames, hereafter known as rack units, in three similar configurations. Each rack unit shall support four (4) keyhole mounted cage enclosures arranged in a two-over-two configuration. Example cages shall be made available to the manufacturer for reference/use in the design of said rack units.

Manufacturer shall be responsible for all cage transportation costs and shall furnish all labor and material necessary to provide and execute the complete portion of this Contract. It is the intention of these specifications that all systems be furnished complete with whatever necessary items are required to produce a satisfactory non-human primate housing cage system.

1. **4.3 Rack Unit** – **i.e. SSCI part 104070-14**
   A. Frame
      1) Materials
         a) 11 Ga. 304 premium stainless steel
      2) Design
         a) Laser cut components.
         b) Formed equal sided angle with 1.50 inch sides.
         c) Fully welded joints.
      3) Finish
         a) Unit shall be glass beaded to a satin finish following construction to remove any discoloration, burrs and sharp edges.
         b) Unit shall have no weld-spatter or rough, sharp or pointed edges; all reasonable efforts care shall be taken to smooth all edges
         c) Casters and watering system shall be protected from, or installed after, blasting process.
         d) Fabrication shall include no solder, filler, or epoxy at any point.
      4) Overall Dimensions
         a) Rack Only
            i. 56.125” Wide, across the front
            ii. 34.500” Deep, including the watering system and drain pipe
            iii. 76.500” High, including casters
         b) Rack with Cages
            i. 56.125” Wide, across the front
            ii. 37.750” Deep, including the watering system and drain pipe
            iii. 77.500” High, including casters
   B. Drain Pan
      1) Materials
         a) 20 Ga. 304 premium stainless steel, with 2B finish.
         b) 2” PVC downspout.
      2) Design
         a) Laser cut components.
         b) One-piece rear sloping flush-through pan.
         c) Centered rear pitch drain boxes, connected with 2” PVC downspout.
         d) Flattened hem on front edge, with no raised lip.
         e) Opening between mounted cage bottom and pan edge shall be at least 2.750”.
      3) Finish

a) Unit shall be glass beaded to a satin finish following construction to remove any discoloration, burrs and sharp edges.
b) Unit shall have no weld-spatter or rough, sharp or pointed edges; all reasonable efforts care shall be taken to smooth all edges
c) Fabrication shall include no solder, filler, or epoxy at any point.

C. Cage Mounting – **i.e. SSCI part 100123-36 (2 ea.) and 100123-37 (2 ea.)**
1) Materials
a) 304 stainless steel button.
2) Design
a) Welded in place .500 inch button hangers, 3 per cage.
b) Location shall match the vertical and horizontal dimensions to allow for cage orientation on the rack relevant to the location of each water lixit inside each cage both vertically and horizontally from the socialization door(s).
3) Button Position
a) Button locations shall correspond with sample cages.

D. Caster – **i.e. SSCI part C008-22082220-FFD00 (2 ea.) and C008-22082221-FFD00 (2 ea.)**
1) Materials
a) Welded stainless steel wheel w/ polyolefin tire.
b) All remaining components shall be stainless steel.
2) Design
a) Stem mounted swivel type.
b) 5” x 1.250” wheel.
c) Integral grease seals.
d) Grease fittings for swivel bearings, wheel bearings/axels.
e) Casters on front edge of rack frame will be side-brake units.
f) 300 lb. load capacity or greater per caster.

E. Automatic Watering – **i.e. Edstrom ‘C’ watering system**
1) Materials
a) 316 stainless steel piping, fittings, brackets, and fasteners.
b) NPT dog lixit ½ inch male.
2) Design
a) Compatible with universal quick disconnect components.
b) Fitted with o-ring sealed high point vent and low point drain fitting.
c) Location shall match the vertical and horizontal dimensions to allow for cage orientation on the rack relevant to the location of each water lixit inside each cage.
3) Valve Position
b) Valve location shall be per provided example cages.

---

1. <u>Prototype:</u> An approved prototype is required for this project.*

A. The Rack Unit production prototype shall be delivered on-site at New Iberia Research Center for assessment no later than thirty (30) working days from either receipt of Purchase Order or notification of acceptance of drawings, whichever is later.

B. Agent should take no longer than five (5) working days to review prototype, and prepare a prototype inspection report.

C. Delivery of revised prototype to NIRC following corrective actions shall be within fifteen (15) working days.

D. Agent should take no longer than five (5) working days to review revised prototype.

E. It is the intention of these specifications that a satisfactory prototype submission be a fully functioning rack unit meeting all aspects of the specifications. An unsatisfactory prototype revision will be available for return to the Manufacturer, at no cost to the Owner.

F. Failure to either submit sample or obtain Agent approval for submission shall be grounds for cancellation of the order. The Owner will not be responsible for <u>any</u> costs associated with rejected prototype.

G. The award shall be based on the unit price of the cage racks. The cost of the prototype will be considered, but may/may not be considered when making a decision to award the order. If the price of the prototype is different from the unit price on the other units, the cost of the prototype (including shipping and all associated fees) must be noted on the bid sheet.

H. The prototype shall be considered part of the final total, a quantity of 54 cage rack units.

I. *The requirement to provide a prototype shall be waived if the Bidder has successfully completed a contract supplying these identical units to the University of Louisiana at Lafayette New Iberia Research Center within the last five (5) calendar years. If a prototype is not provided the unit price shall be consistent for all 54 units.

2. <u>Bidder Qualifications*</u>

A. The ability of a bidder to submit a bid shall not be regarded as the sole test of the bidder's responsibility to perform the contracted work.

B. The Agent reserves the right to make inquiries and conduct investigations as it deems necessary to determine the responsibility of any bidder to perform contracted work.

C. Bidder must have previous experience, constructing and installing similar structures and/or components. Bidder is to include a detailed resume of his/her authority, actual experience, and overall ability to comply with the scope of this contract.

D. Bidder shall have a minimum of ten (10) years of similar structured NHP containment manufacturing experience, i.e. rolling rack units with multiple fixed or removable NHP cages.

E. Bidder shall have completed a minimum of five (5) separate NHP manufacturing projects, and provide references for the same.

F. *These qualifications shall be waived if the Bidder has successfully completed a contract with or supplied these identical units to the University of Louisiana at Lafayette New Iberia Research Center within the last five (5) calendar years.

PRICES QUOTED ARE TO REMAIN FIRM UNTIL ALL DELIVERABLES ARE MET UNDER THIS CONTRACT.

<u>AUDITS</u>

The University reserves the right to have representatives of the University and/or the State inspect the records maintained by the contractor concerning the products and services described herein.

IMPORTANT NOTES: Quantities/dates listed in these specifications are <u>approximate</u> and are not guaranteed by the University. The University reserves the right to ***<u>increase or reduce</u>*** quantity as needed if in the best interest of the University. **The University reserves the right to monitor the service and results and to terminate the contract thirty (30) days after written notice if services are deemed unsatisfactory by the University.**

DELIVERY OF COMPLETE ORDER SHALL NOT EXCEED SIXTY (60) WORKING DAYS AFTER FINAL PROTOTYPE APPROVAL.

ASSOCIATED DRAWINGS – The following drawing is described in these specifications and is provided for the Bidder's reference. Please submit questions to roxanne.formeller@louisiana.edu prior to October 19. Clarifications/responses to questions will be addressed via addendum.

PROPRIETARY RACK FOR PROPROETARY CAGES DESIGNED AND BUILT BY SUBURBAN SURGICAL CO EXCLUSIVELY FOR UNIVERSITY OF LOUISIANA LAFAYETE NEW IBERIA RESEARCH CENTER

4.3 (4) CAGE RACK #104070-14

SUBURBAN SURGICAL CO #104070-14 PREMIUM STAINLESS STEEL TYPE 304 ANGULAR FOUR CAGE PRIMATE RACK FOR CONVERTING EXISTING SUBURBAN SURGICAL CO #100123-36 AND 100133-37 4.3 SQ. FT. PRIMATE SOCIALIZATION CAGES SPECIFICALLY BUILT FOR UNIVERSITY OF LOUISIANA LAFAYETTE NEW IBERIA RESEARCH CENTER WALL HANGING SOCIALIZATION CAGES TO MOBILE RACK TYPE CAGING.

MOBILE ANGULAR RACK WITH TWO REAR SLOPING FLUSH THRU TROUGHS DRAINING INTO RIGHT REAR PITCHED DRAIN BOXES CONNECTED WITH 2"PVC DOWNSPOUT DISPLACING INTO CUSTOMER ROOM FLOOR DRAINING SYSTEM(S).

THREE KEY HOLE CAGE MOUNTING SYSTEM TO SUPPORT EACH SUBURBAN SURGICAL CO #100123-36 AND 100123-37 4.3 SQ. FT. SOCIALIZATION CAGES CURRENTLY AT FACILITY WITH (3) .500"WELDED IN PLACE STAINLESS STEEL BUTTON HANGARS FOR EACH CAGE, MATCHING THE VERTICAL AND HORIZONTAL KEYHOLE DIMENSIONS TO ALLOW FOR THE CAGE ORIENTATION ON THE MOBILE RACK RELEVANT TO THE LOCATION OF EACH WATER LIXIT INSIDE EACH CAGE BOTH VERTICALLY AND HORIZONTALLY FROM THE CENTER SOCIALIZATION DOOR.

TWO SUBURBAN SURGICAL #C008-22082220-FFD00 AND TWO #C008-22082221-FFD00 STAINLESS STEELS"X 1.250"POLYOLEFIN WHEEL SWIVEL CASTERS WITH GREASE FITTINGS TWO WITH SIDE BRAKE, 300 LB. LOAD CAPACITY STEM MOUNTED.

STAINLESS STEEL EDSTROM "C"CONFIGURATION WATER SYSTEM WITH (4) .500 SADDLES FOR LIXIT L-70, QUICK DISCONNECT, DRAIN AND VENT. (CUSTOMER TO SUPPLY LIXIT L-70)

RACK FRAMING IS PREMIUM STAINLESS STEEL 11GA. TYPE 304 WITH LASER CUT COMPONENTS FULLY WELDED WITH A SATIN GLASS BEADED FINISH FREE FROM ALL SHARP EDGES, BURRS AND WELD SPATTER.

FLUSH THRU TROUGHS AND RIGHT REAR PITCH DRAIN BOXES ARE PREMIUM STAINLESS STEEL 20GA TYPE 304 LASER CUT WITH A 2B FINISH FREE FROM ALL SHARP EDGES, BURRS AND WELD SPATTER.

ALL HARDWARE IS 304 SERIES STAINLESS WHERE USED NYLON INSERT LOCK NUTS ARE STANDARD.

OVERALL DIMENSIONS:
RACK ONLY: 56.750"W 76.500"H 34.500"D
RACK W/CAGES: 56.750"W 77.500"H 35.750"D

PLEASE NOTE OVERALL SIZES OF RACKS HAVE BEEN ESTABLISHED THROUGH CLOSE CORRESPONDENCE WITH UNIVERSITY OF LOUISIANA LAFAYETTE NEW IBERIA RESEARCH CENTER TO ENSURE STANDARDIZATION OF SIZING THAT CAN BE USED IN ALL DESIGNATED FACILITY NON-HUMAN PRIMATE ROOMS

ADDED CROSSMEMBERS WILL COMPATIBLE FOR FUTURE RACK MODIFICATIONS TO ALLOW FOR RACK TO RACK CONNECTIVITY/SOCIALIZATION OF 4.3 CAGE RACKS IF DESIRED BY CUSTOMER.

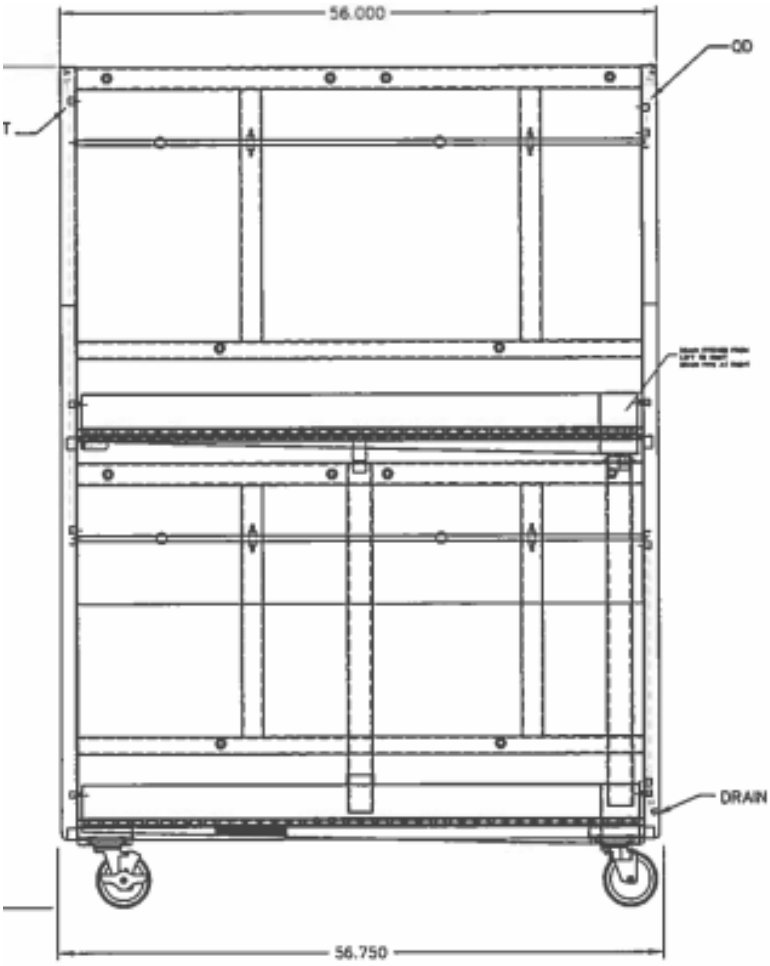

FRONT

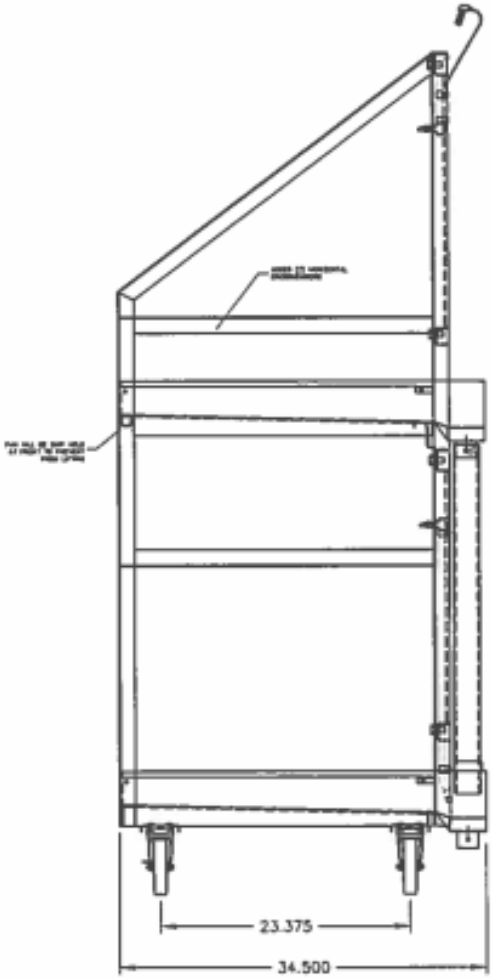

RIGHT SIDE

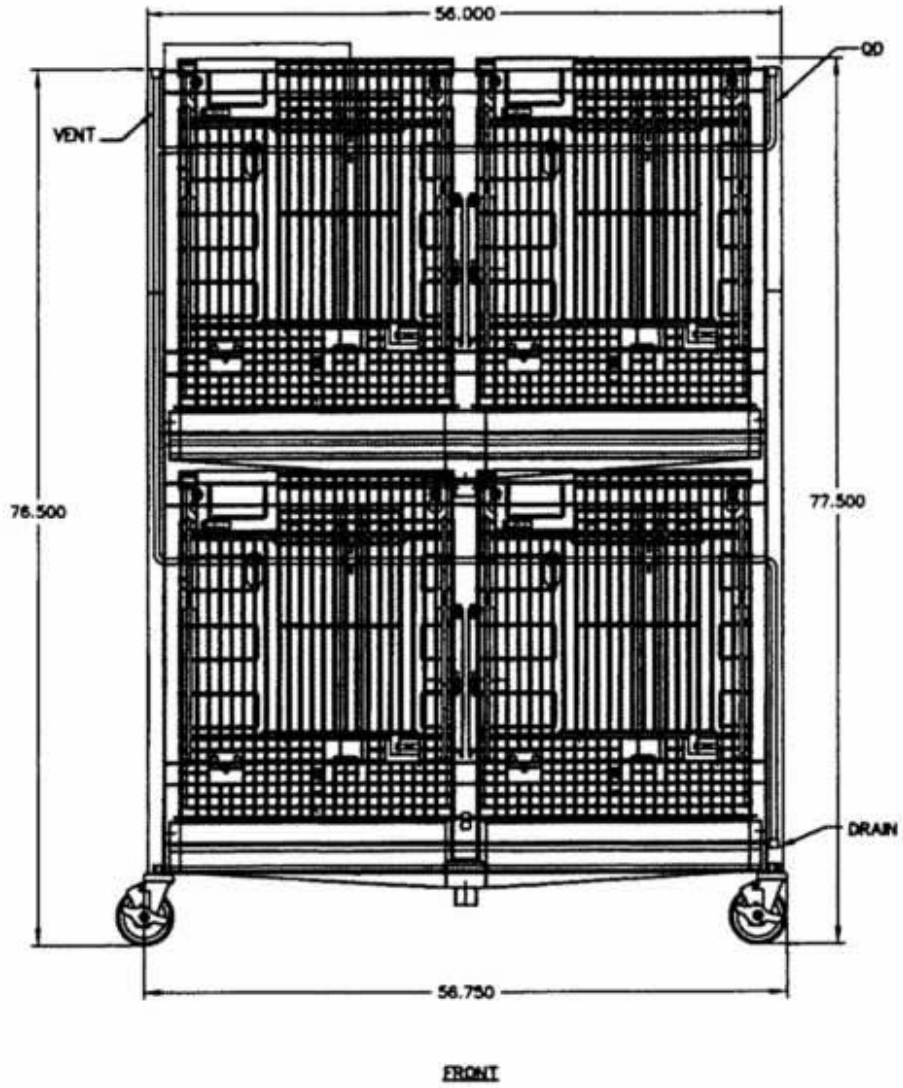
56.000
OD
VENT
76.500
77.500
DRAIN
56.750
FRONT

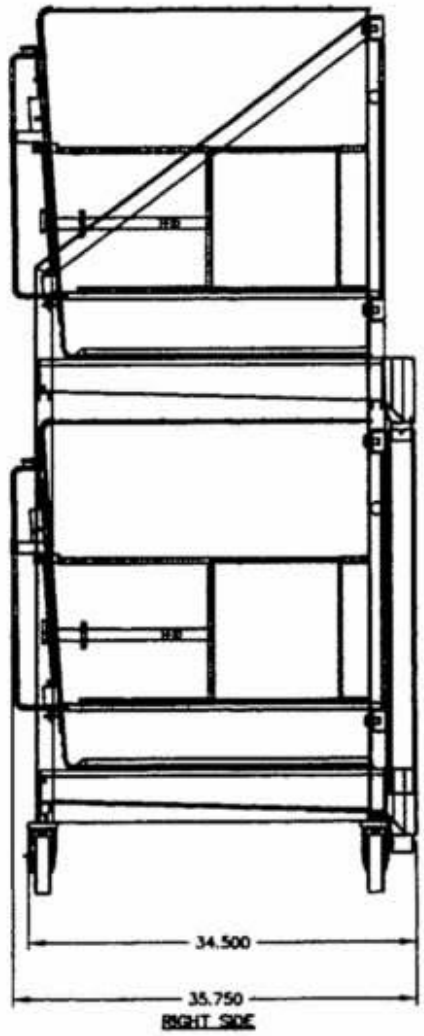
34.500
35.750
RIGHT SIDE

INSURANCE REQUIREMENTS *Revised February 2019*

(for contractors doing business with the University of Louisiana at Lafayette)

I. Purpose and Scope

The purpose of this document is to ensure that third parties doing business with the University are adequately insured for the risk and liability associated with the goods, services, and/or work they provide to the University. This document sets forth the insurance language to be included in the bid and/or contract specifications when hiring contractors, vendors, or service providers to provide goods, perform services, and/or perform work for the University ("Contractors"). This document also sets forth the insurance language that should be included in all University contracts with Contractors ("Contracts"). This document applies to all Contracts to which the University is a party, including the individual departments and units of the University.

II. General Insurance Requirements

Except as expressly provided below with regard to Reduced Limits for Special Circumstances, the following language shall be included in (1) all Contractor bid and contract specifications, and (2) all Contracts. Requests for other variations in this language must be reviewed by the University's Risk Manager, who will make the final decision as to the language to be used. Please note that hazardous, unusual or exceptional activities, or a change in Contract indemnification provisions, may necessitate additional insurance; questions regarding the need for other coverage should be directed to the University's Risk Manager.

Contractor shall purchase, at its own cost and expense, and maintain for the duration of the Contract, insurance against claims for injuries to persons or damages to property which may arise from or in connection with the performance of the work hereunder by Contractor, its agents, representatives, employees, or subcontractors. The insurance shall be obtained from a company or companies lawfully authorized to do business in the State of Louisiana with a A.M. Best's rating of A-:VI or higher. Failure to comply with all terms of this section for the duration of the Contract places Contractor in breach of this Contract. Requests for any variation in this language will be reviewed by University's Risk Manager, who will make the final decision.

A. Minimum Scope of Insurance and Limits

1. Workers Compensation

Contractor shall be in compliance at all times with the Louisiana Workers' Compensation Law with respect to workers' compensation insurance or proper certification of self-insured status.

2. Commercial General Liability

Contractor shall maintain Commercial General Liability insurance, including Personal and Advertising Injury Liability, which coverage shall have a minimum limit per occurrence of $1,000,000 and a minimum general aggregate of $2,000,000. The Insurance Services Office (ISO) Commercial General Liability occurrence coverage form CG 00 01 (current form approved for use in Louisiana), or equivalent, is to be used in the policy. Claims-made form is unacceptable.

Additionally, if alcohol is served in the execution of this Contract, then Contractor shall maintain Liquor Liability coverage in the minimum amount of $1,000,000 per occurrence.

Additionally, if valet parking is performed in the execution of this Contract, then Contractor shall maintain Garage Keepers Liability coverage in the minimum amount of $1,000,000 per occurrence.

3. Automobile Liability (if a Motor Vehicle owned, hired, or rented by the contractor is used in the performance of this Contract)

Contractor shall maintain Automobile Liability Insurance, which coverage shall have a minimum combined single limit per occurrence of $1,000,000. ISO form number CA 00 01 (current form approved for use in Louisiana), or equivalent, is to be used in the policy. This insurance shall include third-party bodily injury and property damage liability for owned, hired, and non-owned automobiles.

B. Other Insurance Provisions

Contractor shall either (i) require each subcontractor and vendor to procure and maintain all applicable insurance of the type and limits specified in this section, or (ii) include all subcontractors as insureds under its policies.

Any deductibles or self-insured retentions must be declared to and accepted by University. Contractor shall be responsible for all deductibles and self-insured retentions. Any insurance or self-insurance maintained by University shall be excess and non-contributory of Contractor's insurance. Contractor's coverage shall contain no special

limitations on the scope of protection afforded to University. Contractor's insurance shall be primary as respects University, The Board of Supervisors for the University of Louisiana System ("Board"), and all of their respective officers, agents, employees, and volunteers.

Except for workers' compensation coverage, University and Board, and all of their respective officers, agents, employees, and volunteers, shall be named as an additional insured as regards negligence by Contractor. ISO Form CG 20 10 (current form approved for use in Louisiana), or equivalent, is to be used when applicable.

Contractor shall provide to University Certificates of Insurance ("Certificates") evidencing the foregoing coverage in advance of Contractor's delivery of goods and/or performance of work or services, and in all events, prior to any payment by University to Contractor. In addition to Certificates, Contractor shall submit to University the declarations page and the cancellation provisions for each insurance policy. University reserves the right to request complete certified copies of all required insurance policies at any time.

Certificates and all notices regarding coverage shall be addressed to:
University of Louisiana at Lafayette
ATTN: Purchasing Department
P.O. Box 40197
Lafayette, LA 70504

Certificates of Insurance shall reflect that, to the fullest extent allowed by law, the insurer shall agree to waive all rights of subrogation against University, its officers, agents, employees, and volunteers for losses arising from work performed by the Contractor for University.

Coverage shall not be canceled, suspended, reduced, or voided by either Contractor or the insurer except after 30 days written notice has been given to University. Ten-day written notice of cancellation is acceptable for non-payment of premium. Notifications shall comply with the standard cancellation provisions in Contractor's policy.
Acceptance of goods or completed work by University, payment by University, failure of University to require proof of compliance, or University's acceptance of a non-compliant Certificate shall not release Contractor from its obligations under these insurance requirements. Failure of Contractor to purchase and/or maintain any required insurance shall not relieve Contractor from any liability or indemnification under the Contract.

III. Additional Insurance Requirements for Special Contracts

In addition to the foregoing insurance requirements, language specifying the following insurance requirements shall be included in: (1.) all bid and contract specifications for professional services and (2.) all Contracts for professional services, where applicable:

A. Professional Liability, Errors and Omissions, and Malpractice Insurance

If any of the following professionals provide services in the execution of the Contract, Contractor shall purchase and maintain Professional Liability Insurance, which coverage shall have minimum limits of $1,000,000:

- Medical Professionals, such as physicians, nurses, dentists, and pharmacists;
- Architects and Engineers;
- Attorneys;
- Accountants and Professional Financial Advisors;
- Real Estate Brokers and Appraisers;
- Insurance Agents; and
- Consultants.

Claims-made coverage for Professional Liability Insurance is acceptable. The date of the inception of the policy must be no later than the first date of the anticipated work under this Contract. It shall provide coverage for the duration of this Contract and shall have an expiration date no earlier than 30 days after the anticipated completion of the Contract. The policy shall provide an extended reporting period of at least 24 months, with full reinstatement of limits, from the expiration date of the policy, if policy is not renewed.

B. Cyber Liability Insurance

For Contracts in which the Contractor shall be granted access to electronic data belonging to the University or others, including but not limited to corporate confidential information (CCI), personal financial information (PII), personal health

information (PHI), payment card information (PCI), and all personal student information (PSI) stored in electronic format, and for which there is a risk of electronic security breaches of this confidential data, including inadvertent release, hacking, viruses, improper destruction, etc., Cyber liability insurance, including first-party costs, shall be required with a minimum limit per occurrence of $1,000,000. Claims-made coverage is acceptable. The date of the inception of the policy must be no later than the first date of the anticipated work under this Contract. It shall provide coverage for the duration of this Contract and shall have an expiration date no earlier than 30 days after the anticipated completion of the Contract. The policy shall provide an extended reporting period of not less than 36 months from the expiration date of the policy, if the policy is not renewed. The policy shall not be cancelled for any reason, except non-payment of premium.

IV. Reduced Limits for Special Circumstances

The scope of work for a bid or Contract may dictate that a reduction of insurance limits is necessary in order to facilitate competition and/or ensure the University's ability to hire qualified Contractors. Low risk activities which may justify a reduction in insurance limits include, but are not limited to:

- Services in which the owner/operator is the only Contractor employee;
- Services that do not involve the use of a motor vehicle;
- Services in which there is no use of hazardous or radioactive materials;
- Services in which there is no use of power machinery or tools;
- Services in which there is no use of high voltage equipment; and
- Services in which no work is actually performed on the University campus.

For these special circumstances, University's Director of Purchasing, at his/her discretion, may choose to reduce the insurance required of Contractor. If insurance requirements are so reduced, the reduction(s) must comply with the following guidelines:

A. Workers Compensation

University may waive workers' compensation insurance requirements for sole proprietors if they are the only person(s) employed by Contractor in performing the work or services specified in the Contract.

If coverage is so waived, the Contract must include language that Contractor agrees that such persons will have no cause of action against, and will not assert a claim against, University, the Board, and/or the State of Louisiana, whether pursuant to the workers' compensation law of Louisiana or any other state, or other similar state or federal law, under any circumstance. The Contract must also include language that the parties agree that University, the Board, and the State of Louisiana, and all of their agents and employees, shall in no circumstance be, or considered as, the employer or statutory employer of Contractor, its owners, agents, or employees. The Contract must further include language that the parties agree that Contractor is a wholly independent contractor and is exclusively responsible for its own employees, owners, and agents, and that Contractor agrees to protect, defend, indemnify and hold University, the Board, and the State of Louisiana, and all of their agents and employees, harmless from any assertion or claim that may arise from the performance of this Contract.

B. Commercial General Liability

Commercial General Liability insurance, including Personal and Advertising Injury Liability, may be reduced to a minimum limit per occurrence of $100,000. The Insurance Services Office (ISO) Commercial General Liability occurrence coverage form CG 00 01 (current form approved for use in Louisiana), or equivalent, is to be used in the policy. Claims-made form is unacceptable.

C. Automobile Liability

Automobile Liability Insurance requirements may be waived *only if* the scope of work does not involve the use of a motor vehicle. Examples include but are not limited to:

1. Goods and/or services that will be delivered to University by a third party (not Contractor); and
2. Goods and/or services that will be delivered to University electronically.

D. Required Insurance Language

Notwithstanding any reduction or waiver made pursuant to this section, all bid/contract specifications and all Contracts must include the language set forth in the General Insurance Requirements section, above, subject to modification only for the specific reduction or waiver made.

END OF SECTION

SPECIAL HEALTH & SAFETY RELATED CONTRACT CLAUSES:

ADDITIONAL CONTRACTOR REQUIREMENTS AND LIMITATION OF LIABILITY

It is expressly understood and agreed by the parties that:

(a) CONTRACTOR shall not visit or utilize the facilities of University if CONTRACTOR (i) experiences symptoms of COVID-19, including, without limitation, fever, cough, or shortness of breath, or (ii) has a suspected or diagnosed/confirmed case of COVID-19, and CONTRACTOR shall notify University immediately if he or she believes that any of the foregoing access/use restrictions may apply;

(b) University has taken certain steps to implement recommended guidance and protocols issued by the Centers for Disease Control ("CDC") and Louisiana Department of Health ("LDH") for slowing the transmission of COVID-19, including, without limitation, the access/use restrictions, and distancing and sanitization requirements set forth herein, and that University may revise its procedures at any time based on updated recommended guidance and protocols issued by the CDC and LDH and CONTRACTOR agrees to comply with University's current and revised procedures prior to utilizing the facilities of University;

(c) CONTRACTOR acknowledges and agrees that, due to the nature of the facilities and the services CONTRACTOR is providing to University, social distancing of six (6) feet per person may not always be possible and CONTRACTOR fully understands and appreciates both the known and potential dangers of utilizing the facilities of University and acknowledges that use thereof by CONTRACTOR may, despite University's reasonable efforts to mitigate such dangers, result in exposure to COVID-19, which could result in quarantine requirements, serious illness, disability, and/or death; and

(d) while University has instituted measures to sanitize common areas, CONTRACTOR shall be responsible for the daily sanitization of his/her personal workspace prior to and immediately preceding CONTRACTOR's use of the space. Under no circumstances shall University be liable to CONTRACTOR, or CONTRACTOR's personal representatives, assigns, heirs, and next of kin for any loss or damage, or any claim or demands on account of any property damage or any injury to, or an illness or the death of, the CONTRACTOR (or any person who may contract COVID-19, directly or indirectly, from the CONTRACTOR) whether caused by the negligence, active or passive, of University or otherwise while CONTRACTOR is in, upon, of about the premises or ay facilities or equipment therein of University.

FORCE MAJEURE

Notwithstanding anything to the contrary in this Agreement, neither party shall be liable to the other or be deemed to be in breach of this Agreement for any failure or delay in whole or partial performance under this Agreement when such failure or delay is caused in whole or in part by a "Force Majeure Event," which shall be defined as any event beyond the control of a party, including, but not limited to: labor disputes, strike, riot, vandalism, sabotage, terrorist act, war (whether declared or undeclared), inclement weather, flood (whether naturally occurring or manmade), tidal surge or tsunami, landslide, earthquake, fire (whether naturally occurring or manmade), explosion, power shortage or outage, fuel shortage, embargo, congestion or service failure, epidemic, or government regulation, proclamation, order, or action; and in each case not involving the fault or negligence of a party. If any Force Majeure Event occurs affecting a party's performance under this Agreement, the affected party will give written notice within five (5) days of the occurrence of the Force Majeure Event to the other party and will use commercially reasonable efforts to minimize the impact of the Force Majeure Event. In the event of a Force Majeure Event resulting in a total or partial performance or service failure by either party, the University, in its sole discretion, may immediately terminate this Agreement. To the extent that services have been rendered and deemed acceptable by University, the service fee and other fees and charges payable by University hereunder shall be paid to the Contractor on a pro-rata basis. For those services which the Contractor is unable to perform under this Agreement as a result of such Force Majeure Event, University shall suspend all related payments until such services are restored.

END OF SECTION

BID SHEET

I/WE PROPOSE TO FURNISH A MINIMUM OF 54 NON-HUMAN PRIMATE CAGE RACK FRAMES FOR MOUNTING 4.3 SQUARE FOOT CAGES **FOR THE NEW IBERIA RESEARCH CENTER AT THE UNIVERSITY OF LOUISIANA AT LAFAYETTE CAMPUS, NEW IBERIA, LOUISIANA, IN STRICT ACCORDANCE WITH THESE BID SPECIFICATIONS FOR THE FOLLOWING SUM…**

If prototype is required, provide bid prices here:

QTY	DESCRIPTION	UNIT PRICE	EXTENDED PRICE
1 EACH	4.3 RACK FRAME UNIT, PROTOTYPE*		
53 EACH	4.3 RACK FRAME UNIT, AS SPECIFIED		
	GRAND TOTAL		

*Prototype may not be required for all bidders.

If prototype is not required, provide bid prices here:

QTY	DESCRIPTION	UNIT PRICE	EXTENDED PRICE
54 EACH	4.3 RACK FRAME UNIT, AS SPECIFIED		

To be delivered in _____ business days after final prototype approval.

IF BIDDING ANY ITEM(S) OTHER THAN SPECIFIED, BIDDER IS TO SUBMIT WITH THE BID DETAILED SHOP DRAWINGS. FAILURE TO DO SO WILL DISQUALIFY THE BID.

Unit price listed is to be inclusive of all fees necessary to complete assigned deliverables. Travel expenses will not be reimbursed to Contractor. Unit prices shall be firm until order is complete and accepted by the University. NET 30 payment terms.

TAX RELATED INFORMATION

It is the responsibility of the prospective bidder to pay taxes on materials purchased for this project. The University of Louisiana at Lafayette is a tax exempt State Agency. However, that tax exempt status does not transfer to its contractors, subcontractors, suppliers, or vendors for their use.

BID SUBMISSION DEADLINE:

Bid submissions for this solicitation are **due on Tuesday, October 26, 2021 at 2:00PM CST** – must be received electronically at ULLafayetteBids@louisiana.edu. There are no exceptions to this deadline.

BID OPENING:

The public bid opening will take place on Wednesday, October 27, 2021 at 10:00AM CST on Zoom, which is available for viewing by registering at: https://ullafayette.zoom.us/meeting/register/tJMqd--tqz8iEtRnkR-jzQKYvz6cv2ucr6Il.

ZOOM MEETING ID: 977 0655 4880 PASSWORD: 788 963

Opening of the bid packages begins at five (5) minutes past the hour to allow all who wish to attend to log in properly.

For further information about the bid or to view job/delivery site, prospective bidder is to email the Buyer of record, *roxanne.formeller@louisiana.edu*.

IMPORTANT NOTE:

Please submit questions to roxanne.formeller@louisiana.edu prior to October 19, 2021. If necessary, clarifications/responses to questions will be addressed via addendum.

By submitting your bid, you are acknowledging that you understand and agree that your company is capable of supplying the products in the timeline you have provided for the price(s) submitted in your bid.

The University of Louisiana at Lafayette reserves the right to reject any or all bids submitted.

There is no loading dock at the delivery site, New Iberia Research Center/Central Receiving.

Bidder comments:

_____

_____

_____

_____

ADDENDA ACKNOWLEDGEMENT(S)

BIDDER ACKNOWLEDGES RECEIPT OF THE FOLLOWING ADDENDA (if applicable):

ADDENDUM NO. _____ DATED: _____

ADDENDUM NO. _____ DATED: _____

ADDENDUM NO. _____ DATED: _____

FIRM NAME _____

SIGNED BY (signature)_____

SIGNED BY (printed) _____

CERTIFICATION STATEMENT

The undersigned hereby acknowledges she/he has read and understands all requirements and specifications of the Invitation to Bid (ITB), including any attachments.

OFFICIAL CONTACT. The University requests that the Bidder designate one person to receive all documents and the method in which the documents are best delivered. Identify the Contact name and fill in the information below: (Print Clearly)

Date _____ Official Contact Name: _____

A. E-mail Address: _____

B. Telephone Number with area code: ( ) _____

C. Facsimile Number with area code: ( ) _____

Bidder certifies that the above information is true and grants permission to the University to contact the above named person or otherwise verify the information provided. By its submission of this Proposal and authorized signature below, Bidder certifies that:

1. The information contained in its response to this ITB is accurate;
2. Bidder complies with each of the mandatory requirements listed in the ITB and will meet or exceed the requirements specified therein;
3. Bidder agrees to provide all tasks, services, and deliverables listed in Scope of Services for the total cost stated on Bid Form;
4. Bidder accepts the procedures, evaluation criteria, mandatory contract terms, and all other administrative requirements set forth in this ITB.
5. Bidder confirms that its bid will be considered valid until award is made.
6. In making this bid, each Bidder represents that: They have read and understand the bid documents and the bid is made in accordance herewith, and the bid is based upon the specifications described in the bid documents without exception.
7. Bidder certifies, by signing and submitting a proposal for $25,000 or more, that their company, any subcontractors, or principals are not suspended or debarred by the General Services Administration (GSA) in accordance with the requirements in OMB Circular A-133. (A list of parties who have been suspended or debarred can be viewed via the internet at www.epls.gov .)

Professional Job Title: _____

Official Company Name: _____

Federal Identification Number: _____

Street Address: _____

City: _____ State: _____ Zip: _____

SIGNATURE of Bidder's Authorized Representative: _____

(Signature MUST be HAND SIGNED and should be in Blue ink)

Date: _____