PROJECT MANUAL

UNO ENGINEERING BUILDING
SECTION B
ROOF REPLACEMENT

BID DOCUMENTS

THE UNIVERSITY of NEW ORLEANS

HOLLY & SMITH ARCHITECTS, APAC
H/S PROJECT NO. 21023
JULY 19, 2021

UNIVERSITY of NEW ORLEANS

BID SPECIFICATIONS FOR
JOB ENTITLED

ROOF REPLACEMENT – SECTION B
ENGINEERING BUILDING

Sealed Bid #BTB 2661

Bid Date: SEPTEMBER 8, 2021

Bid Time: 2:00 p.m.

Mandatory Pre-Bid Conference:

Date: AUGUST 25, 2021

10:00 a.m. at the

Engineering Building Auditorium

THE UNIVERSITY of NEW ORLEANS

SP5196

UNIVERSITY of NEW ORLEANS

BID SPECIFICATIONS FOR
JOB ENTITLED

ROOF REPLACEMENT – SECTION B
ENGINEERING BUILDING

PREPARED BY

UNIVERSITY OF NEW ORLEANS

PURCHASING OFFICE

Administration Annex, Room 1004-G

LAKEFRONT - NEW ORLEANS - LOUISIANA – 70148

Sealed Bid #BTB 2661

Bid Date: SEPTEMBER 8, 2021

Bid Time: 2:00 p.m.

Mandatory Pre-Bid Conference:

Date: AUGUST 25, 2021

10:00 a.m. at the

Engineering Building Auditorium

PURCHASING REPRESENTATIVE: Troy Bacino, Assistant Director
for Purchasing

(504)280-6172 FAX (504)280-6297 E-mail tabacino@uno.edu

UNIVERSITY REPRESENTATIVE: John Young, Director of Maintenance
(504)280-1265 E-mail jmyoung3@uno.edu
Date: July 13, 2021

INDEX

BID INFORMATION

INSTRUCTIONS TO BIDDERS

ARTICLE	DESCRIPTION	PAGES
1	Project Title and Bid Opening Date and Time	1
2	Bidder's Representation	1
3	Bidding Documents	2
3.1	Copies	2
3.2	Interpretation or Correction of Bidding Documents	3
3.3	Substitutions	3
3.4	Addenda	3
4	Bidding Procedure	4
4.1	Form and Style of Bids	4
4.2	Bid Security	5
4.3	Submission of Bids	6
4.4	Modification or Withdrawal of Bid	6
5	Consideration of Bids	7
5.1	Opening of Bids	7
5.2	Rejection of Bids	7
5.3	Acceptance of Bid	8
6	Performance and Payment Bond	8
6.1	Bond Required	8
6.2	Time of Delivery and Form of Bond	9
7	Form of Agreement Between Owner and Contractor	9
7.1	Form to be Used	9

INDEX

BID INFORMATION

INSTRUCTIONS TO BIDDERS (Continued)

ARTICLE	DESCRIPTION	PAGES
7.2	Award	9
7.3	Successful Bidder's Deliver Schedule	9
7.4	Affirmative Action/Non-Discrimination	10
7.5	Compliance Agreement	10
7.6	Recording Contract	10
7.7	Payments	10
7.8	Termination of Contract for Convenience	11
7.9	Acceptance of Work	11
8	Completion Time and Liquidated Damages	11
8.1	Contract Time	11
8.2	Liquidated Damages	11
9	Pre-bid Conference	12
10	Insurance	12
	Insurance Requirements	1-9
	Indemnification Agreement	10
11	General Conditions	40

FORMS

Bid Bond 1

Contract-Bond-Affidavit

Contract between University & Contractor and Performance & Payment Bond 1-3

Affidavit 4

FORMS (Continued)

Attestations Affidavit 2

Bid Form 1-4

Payment Request 1

Schedule of Values 1

END

BID INFORMATION

UNIVERSITY of NEW ORLEANS

INSTRUCTIONS TO BIDDERS

ARTICLE I

PROJECT TITLE AND BID OPENING DATE & TIME

1.1 Project Title: ROOF REPLACEMENT – SECTION B – ENGINEERING BUILDING

Bid Opening Date & Time: SEPTEMBER 8, 2021 **at 2:00 p.m.**

Location of Bid Opening:

University of New Orleans Campus
Purchasing Office
Administration Annex, Room 1004G
New Orleans, Louisiana 70148

1.2 DEFINITIONS

1.2.1 The Bidding Documents include the following

a. Specifications Sections 006000 through 079200 dated 07/19/2021. See Table of Contents in the Technical Specifications for full list.
b. Drawings Sheets No. G100 through A912 dated 07/19/2021. See Table of Contents on Sheet G100 for full list.
c. Addenda issued during the bid period and acknowledged in the Bid Form

1.2.2 All definitions set forth in the General Conditions of the Contract for Construction, AIA Documents A201, or in other Contract Documents are applicable to the Bidding Documents.

1.2.3 Addenda are written or graphic instruments issued by the Architect prior to the opening of bids which modify or interpret the bidding documents by addition, deletions, clarifications, or corrections.

1.2.4 A Bid is a complete and properly signed proposal to do the Work or designated portion thereof for the sums stipulated therein supported by data called for by the Bidding Documents.

1.2.5 Base Bid is the sum stated in the Bid for which the Bidder offers to perform the Work described as the base, to which work may be added for sums stated in Alternate Bids.

1.2.6 An Alternate Bid (or Alternate) is an amount stated in the Bid to be added to the amount of the Base Bid if the corresponding change in project scope or materials or methods of construction described in the Bidding Documents is accepted.

1.2.7 A Unit Price is an amount stated in the Bid as a price per unit of measurement for materials or services as described in the proposed Contract Documents.

1.2.8 A Bidder is one who submits a Bid for a prime contract with the Owner for the Work described in the proposed Contract Documents.

1.2.9 A Sub-bidder is one who submits a bid to a Bidder for materials or labor for a portion of the Work

ARTICLE 2

BIDDER'S REPRESENTATION

2.1 Each Bidder by making his bid represents that:

2.1.1 He has read and understands the Bidding Documents and his bid is made in accordance therewith.

2.1.2 He has visited the site and familiarized himself with the local conditions under which the work is to be performed.

The Bidder is advised to carefully consider all University physical features and activities and occupancies by faculty, staff and students, and to plan construction activities so as not to disrupt the normal operations and activities of the University except as expressly permitted by the University in writing. The Bidder shall be especially aware of existing electric, gas, water, telephone and/or other utilities and facilities which may be in the way of or adjacent to the Work, and shall take appropriate action to protect these utilities during the Work.

Every effort has been made to accurately show all pertinent surface and subsurface features accurately. For self-assurance, the Bidder may examine available drawings and documents related to University premises. Such examinations may be made only in the offices of the University Facility Services as part of the Mandatory Pre-Bid Conference.

2.1.3 His bid is based solely upon the materials, systems and equipment described in the Bidding Documents as advertised and as modified by addenda.

2.1.4 When a discrepancy or ambiguity arises between the written specifications and the drawings, the document which is more stringent, or which benefits the University more as determined by the Director, shall govern.

2.1.5 His bid is not based on any verbal instructions contrary to the Bidding Documents and addenda.

2.2 The Bidder must be fully qualified under any State or local licensing law for Contractors in effect at the time and at the location of the work before submitting his bid. In the State of Louisiana, only the bids of Contractors and Subcontractors duly licensed under Louisiana Revised Statutes 37:2150, et seq. will be considered, if applicable. The Contractor shall be responsible for determining that all of his Subbidders or prospective Subcontractors are duly licensed in accordance with law. (See paragraph 4.1.8)

2.3 The University reserves the right to examine the Successful Bidder's past payroll records and those of any subcontractor to determine whether the employees being used on the contract are regularly employed. The University also reserves the right to question the use of an employee whom it feels is unskilled or untrained on a task that requires a skill. If the bidder intends to use laborers or unskilled workmen on any aspect of the contract, the bidder must furnish a list of the tasks to be performed by said laborers and unskilled workmen with their bid.

2.4 If the Contractor is required to replace any employees because of their failure to comply with these requirements, any time lost on the job shall be the responsibility of the Contractor and shall not be an acceptable reason for requesting extensions of any completion deadlines or waiver of any liquidated damages specified elsewhere in the bid specifications.

2.5 In the event of inconsistencies within or between parts of the Contract Documents, or between the Contract Documents and applicable standards, codes, and ordinances, the Contractor shall: (1) Provide the better quality, upgrade, or quantity of Work, or (2) Comply

with the more stringent requirement, either or both in accordance with the Architect=s interpretation.

ARTICLE 3

BIDDING DOCUMENTS

3.1 Copies

3.1.1 Complete bid documents may be obtained from the University of New Orleans Purchasing Office.

The Bidding Documents consist of the Drawings, the Bid Instructions and all Addenda issued prior to bid opening. Changes to the work made after the contract signing shall be documented by Change Order.

These INSTRUCTIONS TO BIDDERS, including amendments and additions thereto, apply to each and every heading of the TECHNICAL SPECIFICATIONS with the same force as though repeated in full under each heading.

3.1.2 Complete sets of Bidding Documents shall be used in preparing bids; neither the University nor the Consultant assume any responsibility for errors or misinterpretations resulting from the use of incomplete sets of Bidding Documents.

3.1.3 The University or Consultant in making copies of the Bidding Documents available on the above terms, do so only for the purpose of obtaining bids on the work and do not confer a license or grant for any other use.

3.2 Interpretation or Correction of Bidding Documents

3.2.1 Bidders shall promptly notify the Architect of any ambiguity, inconsistency, or error which they may discover upon examination of the Bidding Documents or of the site and local conditions

3.2.2 Bidders requiring clarification or interpretation of the Bidding Documents shall make a written request to the Architect, submitted through the Architect's Project Website, to reach him at least seven (7) days prior to the date for receipt of bids.

3.2.3 It shall be the Bidder's responsibility to make inquiry as to addenda issued. All issued addenda shall be acknowledged on the Bid Form and shall become part of the Contract. Neither the University nor its Consultant(s) will be responsible for any explanation or interpretations of the Documents not covered by written, issued addenda.

3.2.4 Any interpretation, correction or change of the Bidding Documents will be made by addendum. Interpretations, corrections or changes of the Bidding Documents made in any other manner will not be binding, and Bidders shall not rely upon such interpretations, corrections and changes.

3.3 Substitutions

3.3.1 The materials, products and equipment described in the Bidding Documents establish a standard of required function, dimension, appearance and quality to be met by any proposed substitution. No substitutions shall be allowed after bid

opening.

3.3.2 No substitution will be considered unless written request for approval has been submitted by the Proposer and has been received by the Architect at least seven (7) days prior to the date for receipt of bids. Each such request shall include the name of the material or equipment for which it is to be substituted and a complete description of the proposed substitute including model numbers, drawings, cuts, performance and test data and any other information necessary for an evaluation. A statement setting forth any changes in other materials, equipment or work that incorporation of the substitute would require shall be included. It shall be the responsibility of the proposer to include in his proposal all changes required of the Contract Documents if the proposed substitute is used. The burden of proof of the merit of the proposed substitute is upon the proposer. The Architect's decision of approval or disapproval of a proposed substitution shall be final.

Approval, if granted, is given contingent upon Contractor being responsible for any costs which may be necessary to modify the space or facilities needed to accommodate the materials and equipment approved.

3.3.3 If the Architect approves any proposed substitution, such approval will be set forth in an addendum. Bidders shall not rely upon approvals made in any other manner.

3.3.4 It is incumbent upon the bidder, once a substitution is accepted, to assure that the substitution will meet the requirements of the project as an acceptable and contributing operating component of the completed project. The bidder and proposer of the substation if used in the project shall provide all information, drawings and other necessary equipment, and coordination to ensure that the substitution will operate, fit and be able to be maintained as an acceptable operating component of the project.

3.4 Addenda

3.4.1 Addenda will be e-mailed or delivered to all Contractors in attendance at the mandatory Pre-Bid Conference or to all known bidders by the Purchasing Department of the University of New Orleans to have received a complete set of bidding documents if no mandatory Pre-Bid Conference is scheduled.

3.4.2 Copies of addenda will be made available for inspection wherever Bidding Documents are on file for that purpose.

3.4.3 Addenda shall not be issued within a period of seventy-two (72) hours prior to the time set for the opening of bids, excluding Saturdays, Sundays, and any other legal holidays; however, if the necessity arises to issue an addendum modifying plans and specifications within the seventy-two-hour (72) period prior to the time for the opening of bids, then the opening of bids shall be extended exactly one week, without the requirement of re-advertising.

3.4.4 The University shall have the right to extend the bid date by up to (30) thirty days without the requirement of re-advertising. Any such extension shall be made by addendum issued by the University of New Orleans Purchasing Office.

3.4.5 Each Bidder shall ascertain from the University of New Orleans Purchasing Office prior to submitting his bid that he has received all addenda issued, and he shall acknowledge their receipt on the Bid Form.

ARTICLE 4

BIDDING PROCEDURE

4.1 Form and Style of Bids

4.1.1 Bids shall be submitted on the forms provided by the University.

4.1.2 All blanks on the Bid Form shall be filled in by electronic means, typewriter or manually in ink. Signature is required manually by ink.

4.1.3 Where so indicated by the makeup of the Bid Form, sums shall be expressed in both words and figures, and in case of discrepancy between the two, the written words shall govern.

4.1.4 Any interlineations, alteration or erasure must be initialed by the signer of the bid or his authorized representative.

4.1.5 Bidders are cautioned to complete all alternates and unit prices should such be required in the Bid Form. Failure to submit alternate and unit prices will render the proposal informal and shall cause its rejection.

4.1.6 Bidder shall make no additional stipulations on the Bid Form nor qualify his bid in any other manner.

4.1.7 The bid shall include the legal name of Bidder and the bid shall be signed by the person or persons legally authorized to bind the Bidder to a Contract. The authority of the signature of the person submitting the bid shall be deemed sufficient and acceptable under any of the following conditions:

a. Signature on bid is that of any corporate officer or member of a partnership or partnership in commendam listed on most current annual report on file with Secretary of State.

b. Signature on bid is that of authorized representative of corporation, partnership, or other legal entity and bid is accompanied by corporate resolution, certification as to the corporate principal, or other documents indicating authority which are acceptable to the University

c. Corporation, partnership, or other legal entity has filed in the records of the Secretary of State, an affidavit, resolution or other acknowledged or authentic document indicating the names of all parties authorized to submit bids for public contracts. A bid submitted by an agency shall have a current Power of Attorney attached certifying agent's authority to bind Bidder. The name and license number on the envelope shall be the same as the entity identified on the Bid Form

By signing this bid, the bidder certifies compliance with the above

4.1.8 On any bid of Fifty Thousand Dollars ($50,000.00) or more, the Contractor shall certify that he is licensed under R. S. 37: 2150-2173 by placing his signature on the appropriate blank on the Bid Form.

The contractor shall place his Louisiana Contractor License Number on the appropriate blank on the Bid Form.

The Contractor shall be licensed by the Louisiana State Licensing Board for Contractors under Category 1 Building Construction, Subclassification 7-52 Roofing and Sheet Metal, Siding.

Bids in excess of Fifty Thousand Dollars ($50,000.00) received from contractors not licensed under the above classification will not be considered.

4.2 Bid Security

4.2.1 No bid shall be considered or accepted unless the bid is accompanied by bid security. Bid Security must accompany the bid in the sealed envelope. Bidders to attach a certified check, cashier's check, or University of New Orleans Bid Bond Form in the amount of five percent (5%) of the sum of the base bid and all alternates, as an evidence of good faith. Bidders are hereby notified that Bank Checks, Official Bank Checks or similar are not acceptable as bid security. Certified or cashier's checks to be drawn on a bank insured by the Federal Deposit Insurance Corporation in favor of The University of New Orleans or the bid bond shall be written by a surety or insurance company currently on the U.S. Department of the Treasury Financial Management Service list of approved bonding companies which is published annually in the Federal Register, or by a Louisiana-domiciled insurance company with at least an A- rating in the latest printing of the A.M. Best's Key Rating Guide to write individual bonds up to ten percent of policyholder's surplus as shown in the A.M. Best's Key Rating Guide. If the bid security for this project is a Bond, then such Bond shall be submitted on the Bid Bond Form included in the specifications. Any Bond submitted other than on this bond form shall cause the bid to be rejected.

Bid Security furnished by the Contractor shall guarantee that the Contractor will, if awarded the work according to the terms of his proposal, enter into the Contract and furnish Performance and Payment Bonds as required by these Bidding Documents, within ten (10) days after written notice that the instrument is ready for his signature.

Should the Bidder refuse to enter into such Contract or fail to furnish such bonds, the amount of the bid security shall be forfeited to the University as liquidated damages, not as penalty.

4.2.2 The University will have the right to retain the bid security of Bidders until either (a) the Contract has been executed and bonds have been furnished, or (b) the specified time has elapsed so that bids may be withdrawn, or (c) all bids have been rejected.

4.3 Submission of Bids

4.3.1 Bids shall be sealed in the envelope furnished with bid documents and will be received until the time specified and at the place specified in these bid documents. It shall be the specific responsibility of the Bidder to deliver his sealed bid to the

University of New Orleans Purchasing Office at the appointed place and prior to the announced time for the opening of bids. Late delivery of a bid for any reason, including late delivery by United States Mail, or express delivery, shall disqualify the bid. The bid envelope shall be identified legibly on the outside with the following:

a. Project Name and Owner
b. Architect
c. Date
d. Name , Address, and license number of the Bidder.

If the bid is sent by mail, the sealed envelope shall be enclosed in a separate mailing envelope with the notation "Bid Enclosed" on the face thereof. Such bids shall be sent by Registered or Certified Mail, Return Receipt Requested, addressed to: University of New Orleans, Purchasing Office, Administration Annex Building, Room 1004-G, New Orleans, Louisiana 70148. Bids sent by express delivery shall be delivered to: University of New Orleans, Purchasing Office, Administration Annex Building, Room 1004-G, Lakefront, New Orleans, Louisiana 70148.

4.3.2 Bids shall be deposited at the designated location prior to the time on the date for receipt of bids indicated in these Bid documents, or any extension thereof made by addendum. Bids received after the time and date for receipt of bids will be returned unopened.

4.3.3 Bidder shall assume full responsibility for timely delivery at location designated for receipt of bids.

4.3.4 Oral, telephonic, telegraphic, or faxed bids are invalid and shall not receive consideration.

4.3.5 The University shall not consider notations written on outside of bid envelope which have the effect of amending the bid. Written modifications enclosed in the bid envelope, and signed or initialed by the Contractor or his representative, shall be accepted.

4.36 The bid submission shall include the following documents:

a. Bid Form and *Unit Price Form if unit prices are included.*
b. Bid Security
c. Document authorizing execution of signature on Bid Form if not submitting as a sole proprietor.

4.4 Modification or Withdrawal of Bid

4.4.1 A bid may not be modified, withdrawn, or canceled by the Bidder for a period of thirty (30) calendar days for the period following the time and bid date designated for the receipt of bids, and Bidder so agrees in submitting his bid, except in accordance with R.S. 38:2214 which states, in part, "Bids containing patently obvious, unintentional, and substantial mechanical, clerical, or mathematical errors, or errors of unintentional omission of a substantial quantity of work, labor, material, or services made directly in the compilation of the bid, may be withdrawn by the contractor if clear and convincing sworn, written evidence of such errors is furnished to the University of New Orleans Purchasing Office within forty-eight hours of the bid opening excluding Saturdays, Sundays, and legal holidays. Such errors must be clearly shown by objective evidence drawn from inspection of the original work papers, documents, or materials used in the preparation of the bid

sought to be withdrawn. If the University of New Orleans Purchasing Office determines that the error is a patently obvious mechanical, clerical, or mathematical error, or unintentional omission of a substantial quantity of work, labor, material, or services, as opposed to a judgment error, and the bid was submitted in good faith it shall accept the withdrawal and return the bid security to the contractor."

4.4.2 Prior to the time and date designated for receipt of bids, bids submitted early may be modified or withdrawn by notice to the University of New Orleans Purchasing Office at the place and prior to the time designated for receipt of bids.

4.4.3 Withdrawn bids may be resubmitted up to the time designated for the receipt of bids provided that they are then fully in conformance with these Instructions to Bidders.

4.4.4 Bid Security shall be in an amount sufficient for the bid as modified or resubmitted.

ARTICLE 5

CONSIDERATION OF BIDS

5.1 Opening of Bids

5.1.1 The properly identified Bids received on time will be opened publicly and will be read aloud, and a tabulation abstract of the amounts of the base bids and alternates, if any, will be made available to Bidders.

5.2 Rejection of Bids

5.2.1 The University shall have the right to reject any or all bids and in particular to reject a bid not accompanied by any required bid security or data required by the Bidding Documents or a bid in any way incomplete or irregular. The provisions and requirements of the Instructions to Bidders, the Advertisement for bids, and those required on the bid form shall not be considered as informalities and shall not be waived.

5.2.2 The University reserves the right to reject any and all bids at its discretion.

5.3 Acceptance of Bid

5.3.1 It is the intent of the University, if any alternates are accepted, to accept them in the order in which they are listed in the Bid Form. Determination of the Low Bidder shall be on the basis of the sum of the base bid and the alternates accepted. However, the University shall reserve the right to accept alternates in any order which does not affect determination of the Low Bidder.

5.3.2 University of New Orleans upon receipt of bids, shall act within thirty calendar days of such receipt to award contract to the lowest responsible bidder provided the Bid has been submitted in accordance with the requirements of the Bidding Documents is judged to be reasonable and does not exceed the funds available or reject all bids. However, University of New Orleans, by mutually written consent, may agree to extend the deadline of award by one or more extensions of thirty calendar days.

ARTICLE 6

PERFORMANCE AND PAYMENT BOND

6.1 Bond Required

6.1.1 The Contractor shall pay for and provide a Performance and Labor and Material Payment Bond in the full amount of the bid within ten (10) days after written notice from the University or its Consultant that the work has been awarded to him. Bond furnished shall be a statutory bond and no modification, omissions, additions in or to the terms of the contract, in the plans and specifications or in the manner and mode of payment shall in any manner diminish, enlarge, or otherwise modify the obligations of the bond. Surety bond shall be written by a surety or insurance company currently on the U.S. Department of the Treasury Financial Management Service list of approved bonding companies which is published annually in the Federal Register or by an insurance company that is either domiciled in Louisiana or owned by Louisiana residents and is licensed to write surety bonds. For any public works project, no surety or insurance company shall write a bond which is in excess of the amount indicated as approved by the U.S. Department of the Treasury Financial Management Service list; companies authorized by this paragraph who are not on the treasury list shall not write a bond when the penalty exceeds fifteen percent of its capital and surplus, such capital and surplus being the amount by which the company's assets exceed its liabilities as reflected by the most recent financial statements filed by the company with the Department of Insurance. In addition, any surety bond written for a public works project shall be written by a surety or insurance company that is currently licensed to do business in the State of Louisiana. Bond shall be in favor of The University of New Orleans.

6.2 Time of Delivery and Form of Bond

6.2.1 The Bidder shall deliver the required bond to the University simultaneous with the execution of the Contract.

6.2.2 Bond shall be in the form furnished by University of New Orleans Purchasing Office, entitled CONTRACT BETWEEN OWNER AND CONTRACTOR AND PERFORMANCE AND PAYMENT BOND, a copy of which is included in the Contract Documents.

6.2.3 The Bidder shall require the Attorney-in-Fact who executes the required bond on behalf of the surety to affix thereto a certified and current copy of his power of Attorney.

ARTICLE 7

FORM OF AGREEMENT BETWEEN OWNER AND CONTRACTOR

7.1 Form to be Used

7.1.1 Form of the Contract to be used shall be furnished by the University of New Orleans Purchasing Office, a copy of which is bound in the Bidding Documents.

7.2 Post Bid Information & Award

7.2.1 Submissions: Within ten (10) days after the Bid, the following documents shall be

submitted to the Owner. **Failure to submit these documents within the specified time frame will result in disqualification of the Bidder.**

a. Attestation Clause (Past Criminal Convictions of Bidders and Verification of Employees) form found within this bid package, in accordance with La. R.S. 38:2227 and LA. R.S. 38:2212.10.
b. Non-Collusion Affidavit form bound within this bid package, in accordance with La. R.S. 38:2224

7.2.2 The Bidder shall, prior to the award of a Contract for the Work, submit the following information to the Architect.

a. A designation of the work to be performed by the Bidder with his own forces.
b. The proprietary names and the suppliers of principal items or systems of material and equipment proposed for the work.
c. A list of names of the subcontractors or other persons or organizations (including those who are to furnish materials or equipment fabricated to a special design) proposed for the principal portions of the work.
d. A Schedule of Values set up by trade item with labor and material separated for each phase of work.
e. The name of the proposed superintendent along with a resume of same. The resume shall cover biographical data, past experience, and references.

7.2.3 The Bidder will be required to establish to the satisfaction of the Architect and the Owner the reliability and responsibility of the proposed Subcontractors to furnish and perform the work described in the Sections of the Specifications pertaining to such proposed Subcontractors' respective trades.

7.2.4 Prior to the award of the Contract, the Architect will notify the Bidder if either the Owner or the Architect, after due investigation, has reasonable and substantial objection to any person or organization on the Contractor's list of proposed Subcontractors.

7.2.5 Subcontractors and other persons and organizations proposed by the Bidder and accepted by the Owner and the Architect must be used on the work for which they were proposed and accepted and shall not be changed except with the written approval of the Owner and the Architect.

7.2.6 As soon as the contract has been fully awarded according to law, certified checks will be returned to all bidders other than the successful Bidder; the latter’s check will be returned on the signing of the Contract.

7.2.7 Upon the execution of the contract, University of New Orleans, within thirty days thereafter, shall issue to the contractor a Notice to Proceed with the project. However, upon mutual consent by both parties, the Notice to Proceed may be extended.

7.2.8 After the purchase order has been awarded, no changes will be made to any part without written approval from the Director of the Department issuing these bid documents. The proposed change will be submitted in writing, with a complete breakdown of all material and labor, and the individual cost of each.

7.3 Successful Bidder’s Delivery Schedule

7.3.1 The Successful Bidder will provide a delivery construction schedule. Submit with in fifteen (15) days after the date established "Commencement of the Work".

7.3.2 Schedule Updating: Revise the schedule after each meeting, event, or activity where schedule revisions have been recognized or made. Distribute updated schedule with in seventy-two (72) hours to Project Manager for review.

7.4 Affirmative Action/Non-Discrimination

7.4.1 If the amount of the Contract is over $10,000, the successful Bidder shall be required to execute the Equal Employment Opportunity Clause and Assurance of non-discrimination prior to the University entering into a contract. These documents will be in accordance with Chapter 60 of the rules and regulations, Office of Federal Contract Compliance, Equal Opportunity, U.S. Department of Labor.

7.5 Compliance Agreement

7.5.1 If the amount of the contract is $50,000 or more, the successful Bidder shall be required to execute the Affirmative Action Compliance agreement prior to the University entering into a contract.

7.6 Recording Contract

7.6.1 The Contractor at his own expense, shall record the original executed Contract and the Performance and Labor and Material Bond with the Recorder of Mortgages, Orleans Parish, within five (5) working days of Contract signing. A NOTICE OF THIS RECORDING SHALL BE SENT TO THE PURCHASING OFFICE BEFORE PURCHASE ORDER AND NOTICE TO PROCEED ARE ISSUED.

7.6.2 Recordation of certain Change Orders, see General Conditions 1.16 CHANGES TO THE WORK.

7.7 Payments

7.7.1 The Contract shall provide payment equal to not more than ninety per cent (90%) of the total contract amount upon completion of the work. The remaining ten per cent (10%) shall be paid forty-five (45) days after the acceptance of the work by the University, provided a clear lien certificate is provided by the Contractor.

7.7.2 University standard forms for "Schedule of Values" and "Payment Request" will be provided to the Contractor at the Pre-Construction Conference. An original invoice must accompany the UNO pay request forms. **ONLY PAYMENT REQUESTS SUBMITTED ON THE UNIVERSITY FORM WILL BE PROCESSED FOR PAYMENT. ALL OTHERS WILL BE RETURNED FOR COMPLIANCE TO THIS REQUIREMENT**.

7.7.3 When an engineer, designer, or architect is involved with the project, all pay requests must have his or her original signature on the original pay request forms **before** they are submitted to the University for processing.

7.7.4 No notice of completion, delivery memo, invoice, or other document will be signed, or approvals of any type given for any part of the job or delivery of any equipment

or materials, except by the Director of the Department issuing these bidding documents, or his designee, such designation to be made in writing and signed by the Director. All work will be done during normal working hours unless the Director grants prior written approval, or the scope of Work requires that the work be done after hours.

7.8 Termination of Contract for Convenience

7.8.1 The University may, at any time, terminate the Contract for the University's convenience and without cause. Upon receipt of written notice from the University of such termination for the University's convenience, the Contractor shall: cease operations as directed by the University in the notice; take actions necessary, or that the University may direct, for the protection and preservation of the Material, terminate all existing subcontracts and purchase orders and enter into no further subcontracts and purchase orders.

7.8.2 In case of such termination for the University's convenience, Contractor shall be entitled to receive payment for Work executed along with reasonable overhead and profit.

7.8.3 University shall not be responsible or otherwise liable for any demobilization costs or Incidental or consequential damages resulting from such termination.

7.9 Acceptance of the Work

7.9.1 Upon substantial completion of the Work, the University shall execute a certificate that the whole work provided for in this agreement has been completed and approved under the terms and conditions thereof.

The Contractor shall then file the acceptance of the whole work at his expense with the Recorder of Mortgage of the Parish of Orleans.

ARTICLE 8

COMPLETION TIME AND LIQUIDATED DAMAGES

8.1 Contract Time:

8.1.1 The Bidder agrees to guarantee completion of the work within **One Hundred and Fifty (150)** calendar days starting from the Notice to Proceed, subject to extensions as may be granted or the Contractor will be subject to pay to the University liquidated damages in the amount stated on this document. The Bidder's attention is especially directed to the urgency of this work and that time is of the essence.

a. Extensions for weather conditions shall not be given unless weather conditions prevailing are deemed by the Architect to be abnormal.

8.2 Liquidated Damages

8.2.1 Time is of the essence and completion of the work must be within the Contract Time for Completion-stated in Paragraph 8.1.1, subject to such extensions as may be granted by the University for delays identified as beyond the Contractor's control.

The Contractor will be assessed **Three Hundred Dollars ($300.00)** for each consecutive calendar day during which the work remains incomplete beyond the Contract Completion date stated on the "Notice to Proceed" or as amended by Change order, Sundays and holidays included. This amount is agreed upon as the proper measure of liquidated damages which the University will sustain per day by the failure of the undersigned to complete the work at the stipulated time and is not to be construed in any sense as a penalty.

ARTICLE 9

PRE-BID CONFERENCE

9.1 A Mandatory Pre-Bid Conference shall be held at the project site. Provisions for the site inspection are included as part of the mandatory **Pre-Bid Conference to be held in Engineering Bldg. Auditorium at 10:00 A.M. on August 25, 2021**. The Pre-Bid Conference shall also provide opportunity for a review of the Bid Documents. The purpose of the Pre-Bid Conference is to familiarize Bidders with the requirements of the Project and the intent of the Bidding Documents, and to receive comments and information from interested Bidders.

9.2 Any revision of the Bidding Documents made as a result of the Pre-Bid Conference shall not be valid unless included in an addendum issued in accordance with Paragraph 3.4.1 of the Instructions to Bidders.

ARTICLE 10

INSURANCE

10.1 The Contractor, prior to commencing work, shall provide at his expense, proof of insurance coverage with insurance companies licensed in the State of Louisiana. Insurance shall be placed with insurers with an A.M. Best's rating of no less than A-:VI.

10.2 Insurance requirements are set forth in "Supplement I" of these documents.

SUPPLEMENT I
INSURANCE REQUIREMENTS

***** INSURANCE *****

STANDARDIZED INSURANCE REQUIREMENTS FOR ALL AGENCY CONTRACTS

I. The following Indemnification Agreement shall be, and is hereby, a provision of the contract:

The other party agrees to protect, defend, indemnify, save and hold harmless the State of Louisiana, all State Departments, Agencies, Boards and Commissions, its officers, agents, servants and employees, including volunteers, from and against any and all claims, demands, expense and liability arising out of injury or death to any person or the damage, loss or destruction of any property which may occur or in any way grow out of any act or omission of the other party, its agents, servants, and employees, or any and all costs, expense and/or attorney fees incurred by the other party as a result of any claim, demands, and/or causes of action except of those claims, demands, and/or causes of action arising out of the negligence of the State of Louisiana, all State Departments, Agencies, Boards, Commissions, its agents, representatives, and/or employees. The other party agrees to investigate, handle, respond to, provide defense for and defend any such claims, demand, or suit at its sole expense and agrees to bear all other costs and expenses related thereto, even if it (claims, etc.) is groundless, false or fraudulent.

II. All policies and certificates of insurance of the Contractor/Subcontractor shall contain the following clauses:

A. The Contractor/Subcontractor's insurer will have no right of recovery or subrogation against the Agency, it being the intention of the parties that the insurance policies so affected shall protect both parties and the primary coverage for any and all losses covered by the below described insurance.

B. The Agency shall be named as an additional insured as regards negligence by the contractor (ISO Form CG 20 10 – current form approved for use in Louisiana).

C. The insurance companies issuing the policy or policies shall have no recourse against the Agency for payment of any premiums or for assessments under any form of policy.

D. Any and all deductibles in the below described insurance policies shall be assumed by and be for the amount of, and at the sole risk of the Contractor/Subcontractor.

III. INSURANCE: The Contractor/Subcontractor, prior to commencing work, shall provide at his own expense, proof of the following insurance coverages required by the contract to the Agency in insurance companies authorized in the State of Louisiana. Insurance is to be placed with insurers with an A. M. Best's rating of **A-:VI or higher**. This rating requirement may be waived for workers' compensation coverage only.

Thirty days prior notice of cancellation shall be given to the Agency by registered mail, return receipt requested, on all of the required coverage provided to the Agency. All notices will name the Contractor/Subcontractor and identify the contract number.

Insurance coverage specified in the GENERAL CONDITIONS (AIA Document A 201, 1997 Edition) to be provided by the Contractor, and any other insurance described below shall be furnished with the following minimum limits:

SUPPLEMENT I
INSURANCE REQUIREMENTS

***** INSURANCE *****

A. Workers' Compensation - Statutory - in compliance with the Compensation Law of the State. Exception: Employers liability to be $1,000,000 when work is to be over water and involves maritime exposures.

B. Commercial General Liability Insurance with a combined single limit per occurrence for bodily injury and property damage. This insurance shall include coverage for bodily injury and property damage, and include the following coverages:

1. Premises - Operations;
2. Broad Form Contractual Liability;
3. Products and Completed Operations;
4. Use of Contractors and Subcontractors;
5. Personal Injury;
6. Broad Form Property Damage;
7. Explosion, Collapse and Underground (XCU) Coverage.

NOTE: On the certificate of insurance, under the description of operations, the following wording is required: THE AGGREGATE LOSS LIMIT APPLIES TO EACH PROJECT, or a copy of ISO form CG 25-03 (current form approved for use in Louisiana) shall be submitted.

COMBINED SINGLE LIMIT (CSL) - AMOUNT OF INSURANCE REQUIRED

Type of Construction	Projects under $100,000	Projects $100,001 up to $1,000,000	Projects over $1,000,000
New Buildings:			
Each Occurrence/ Minimum Limit	$500,000	$1,000,000	$3,000,000
Aggregate (Applicable to this contract ONLY)	$500,000	$1,000,000	$3,000,000
Renovations:	**The building(s) value for this project is :**		**$24,164,862.00**
Each Occurrence/ Minimum Limit	$500,000**	$1,000,000**	$3,000,000**
Aggregate (Applicable to this contract ONLY)	$500,000**	$1,000,000**	$3,000,000**

While the minimum combined single limit of $500,000 is required for all renovations, the value of a building shall be multiplied by 10% and insurance requirements will be increased at $1,000,000 intervals and rounded to the nearest $1,000,000. Example: Renovation on $33,000,000 building would require $3,000,000 minimum combined single limit of coverage. Maximum limit required is $5,000,000 regardless of building value.

C. Business Automobile Liability Insurance with a combined single limit of $1,000,000 per occurrence for bodily injury and property damage, unless otherwise indicated. This insurance shall include for bodily injury and property damage the following coverages:

1. Owned automobiles;
2. Hired automobiles;
3. Non-owned automobiles.

D. An Umbrella Policy may be used to meet minimum requirements.

IV. All property losses shall be made payable to and adjusted with the Agency.

V. All policies of insurance shall be approved by the contracting Agency prior to the inception of any work.

VI. Other insurance required is as follows:

Owner's Protective Liability (OPL) Insurance shall be furnished by the Contractor and naming the State of Louisiana as the Named Insured for projects over $50,000.

	Projects under $100,000	Projects $100,001 up to $1,000,000	Projects over $1,000,000
CSL – Each Occurrence:	$500,000	$1,000,000	$3,000,000

VII. Property Insurance

The General Contractor shall purchase and maintain property insurance upon the entire work included in the contract for an amount equal to the greater of the full-completed value or the amount of the construction contract including any amendments thereto. The general contractor's policy shall provide "ALL RISK" Builder's Risk insurance (Extended to include the perils of wind, collapse, vandalism/malicious mischief, and theft, including theft of materials whether or not attached to any structure). The "All Risk" Builder's Risk insurance must also cover architect's and engineer's fees that may be necessary to provide plans and specifications and supervision of work for the repair and/or replacement of property damage caused by a covered peril not to exceed 10% of the cost of those repair and/or replacements

Flood coverage shall be provided by the Contractor on the first floor and below for projects North of the Interstate Corridor beginning at the Texas – Louisiana border at Interstate 10 east to the Baton Rouge junction of Interstate 12, East to Slidell junction with Interstate 10 to the Louisiana – Mississippi border. Flood sub-limit shall equal an amount no lower than 10% of the total contract cost per occurrence. Coverage for roofing projects shall not require flood coverage.

On projects south of this corridor, flood coverage shall be provided by the State of Louisiana, as the owner, through the National Flood Insurance Program (NFIP). The Contractor will be liable for the $5,000 deductible on the NFIP policy from the Notice to Proceed date through the Notice of Final Acceptance date of the project.

A specialty contractor shall purchase and maintain property insurance upon the system to be installed for an amount equal to the greater of the full-completed value or the amount of the contract including any amendments thereto. The specialty contractor may provide an installation floater with the same coverage as the "ALL RISK" Builder's Risk insurance policy.

***** INSURANCE *****

The policy must include the interest of the Owner, Contractor, and Subcontractors as their interest may appear. The contractor has the right to purchase coverage or self-insure any exposures not required by the bid specifications, but shall be held liable for all losses, deductibles, self-insurance for coverage not required.

Policies insuring projects involving additions, alterations or repairs to existing buildings or structures must include an endorsement providing the following:

In the event of a disagreement regarding a loss covered by this policy which may also be covered by the State of Louisiana, Policy of self-insurance or any commercial property insurance policy purchased by the State of Louisiana, Office of Risk Management (ORM) covering in excess of the State of Louisiana, policy of self-insurance, this company agrees to the following procedure to establish coverage and/or the amount of loss:

Any party to a loss may make a written demand for an appraisal of the matter in disagreement. Within 20 days of receipt of written demand, this company and either ORM or its commercial insurance company shall each select a competent and impartial appraiser and notify the other of the appraiser selected. The two appraisers will select a competent and impartial umpire. The appraisers will then identify the policy or policies under which the loss is insured and, if necessary, state separately the value of the property and the amount of loss that must be borne by each policy. If the appraisers fail to agree, they shall submit their differences to the umpire. A written decision by any two shall determine the policy or policies and the amount of loss. Each insurance company (or ORM) agree that the decision of the appraisers and the umpire, if involved, will be binding and final and that neither party will resort to litigation. Each of the two parties shall pay its chosen appraiser and bear the cost of the umpire equally.

VIII. If, at any time, any of the said policies shall be or become unsatisfactory to the Agency, as to form or substance, or if a company issuing any such policy shall be or become unsatisfactory to the Agency, the Contractor/Subcontractor shall promptly obtain a new policy, submit the same to the Agency for approval and submit a certificate thereof as herein above provided.

Upon failure of the Contractor/Subcontractor to furnish, deliver and maintain such insurance as above provided, this contract, at the election of the Agency, may be forthwith declared suspended, discontinued or terminated. Failure of the Contractor/Subcontractor to take out and/or to maintain or the taking out and/or maintenance of any required insurance shall not relieve the Contractor/Subcontractor from any liability under the contract, nor shall the insurance requirements be construed to conflict with the obligations of the Contractor/Subcontractor concerning indemnification. The Agency reserves the right to require complete, certified copies of all required insurance policies at any time.

SUPPLEMENT I
INSURANCE REQUIREMENTS

***** INSURANCE *****

INFORMATION FOR BIDDERS

RISKS AND INDEMNIFICATIONS ASSUMED BY THE CONTRACTOR

A. Neither the acceptance of the completed work or payment therefore shall release the Contractor/Subcontractor from his obligations from the insurance requirements or indemnification agreement.

1. Additional insurance may be required on an individual basis for extra hazardous contracts and specific service agreements. If such additional insurance is required for a specific contract, that requirement will be described in the "Special Conditions" of the contract specifications.
2. If any of the Property and Casualty insurance requirements are not complied with at their renewal dates, payments to the Contractor/Subcontractor will be withheld until those requirements have been met, or at the option of the Agency, the Agency may pay the Renewal Premium and withhold such payments from any monies due the Contractor/Subcontractor.
3. All property losses shall be made payable to and adjusted with the Agency.
4. All policies and certificates of insurance shall be approved by the contracting agency prior to the inception of any work.
5. Other coverages may be required by the Agency based on specific needs. If such other coverages are required for this contract, those coverages will be described in the "Special Conditions" of the contract specifications.
6. If at any time any of the foregoing policies shall be or become unsatisfactory to the Agency, as to form or substance, or if a company issuing any such policy shall be or become unsatisfactory to the Agency, the Contractor/Subcontractor shall, upon notice to that effect from the Agency, promptly obtain a new policy, submit the same to the Agency for approval and submit a certificate thereof as herein above provided. Upon failure of the Contractor/Subcontractor to furnish, deliver and maintain such insurance as above provided, this Contract, at the election of the Agency, may be forthwith declared suspended, discontinued or terminated. Failure of the Contractor/Subcontractor to take out and/or maintain or the taking out and/or maintenance of any required insurance, shall not relieve the Contractor/Subcontractor from any liability under the Contract, nor shall the insurance requirements be construed to conflict with or otherwise limit the obligations of the Contractor/Subcontractor concerning indemnification. The agency reserves the right to require complete, certified copies of all required insurance policies at any time.

SUBCONTRACTORS

Contractor shall include all subcontractors as insured's under its policies or shall furnish separate certificates for each subcontractor. All coverages for subcontractors shall be subject to all of the requirements stated herein.

CERTIFICATES OF INSURANCE

Contractor shall furnish the Agency with certificates of insurance affecting coverage required by this clause. The certificates for each insurance policy are to be signed by a person authorized by that

insurer to bind coverage on its behalf. The certificates are to be received and approved by the Agency before work commences. The Agency reserves the right to require complete, certified copies of all required insurance policies at any time.

INSURANCE REQUIREMENTS FOR CONTRACTORS

Contractor shall procure and maintain for the duration of the contract insurance against claims for injuries to persons or damages to property which may arise from or in connection with the performance of the work hereunder by the Contractor, his agents, representatives, employees or subcontractors. The cost of such insurance shall be included in the Contractor's bid.

A. MINIMUM SCOPE OF INSURANCE

Coverage shall be at least as broad as:

1. Insurance Services Office Commercial General Liability coverage "occurrence" form CG 00 01 (current form approved for use in Louisiana). "Claims Made" form is unacceptable.
2. Insurance Services Office form number CA 00 01 (current form approved for use in Louisiana) covering Automobile Liability. The policy shall provide coverage for owned, hired, and non-owned coverage. If an automobile is to be utilized in the execution of this contract, and the vendor/contractor does not own a vehicle, then proof of hired and non-owned coverage is sufficient.
3. Workers' Compensation insurance as required by the Labor Code of the State of Louisiana, including Employers Liability insurance.

B. MINIMUM LIMITS OF INSURANCE

Contractor shall maintain limits no less than:

1. Commercial General Liability: $1,000,000 combined single limit per occurrence for bodily injury, personal injury and property damage (or higher limits depending on size of contract.)
2. Automobile Liability: $1,000,000 combined single limit per accident, for bodily injury and property damage.
3. Workers Compensation and Employers Liability: Workers' Compensation limits as required by the Labor Code of the State of Louisiana and Employers Liability coverage. Exception: Employers liability limit is to be $1,000,000 when work is to be over water and involves maritime exposure.

C. DEDUCTIBLES AND SELF-INSURED RETENTIONS

Any deductibles or self-insured retentions must be declared to and approved by the Agency. At the option of the Agency, either 1) the insurer shall reduce or eliminate such deductibles or self-insured retentions as respects the Agency, its officers, officials, employees and volunteers, or 2) the Contractor shall procure a bond guaranteeing payment of losses and related investigations, claim administration and defense expenses.

***** INSURANCE *****

D. OTHER INSURANCE PROVISIONS

The policies are to contain, or be endorsed to contain, the following provisions:

1. General Liability and Automobile Liability Coverages

   a. The Agency, its officers, officials, employees, Boards and Commissions and volunteers are to be added as "additional insured" as respects liability arising out of activities performed by or on behalf of the Contractor; products and completed operations of the Contractor, premises owned, occupied or used by the Contractor. The coverage shall contain no special limitations on the scope of protection afforded to the Agency, its officers, officials, employees or volunteers. It is understood that the business auto policy under "Who is an Insured" automatically provides liability coverage in favor of the State of Louisiana.
   b. Any failure to comply with reporting provisions of the policy shall not affect coverage provided to the Agency, its officers, officials, employees, Boards and Commissions or volunteers.
   c. The Contractor's insurance shall apply separately to each insured against whom claim is made or suit is brought, except with respect to the limits of the insurer's liability.

2. Workers' Compensation and Employers' Liability Coverage

   The insurer shall agree to waive all rights of subrogation against the Agency, its officers, officials, employees and volunteers for losses arising from work performed by the Contractor for the Agency.

3. All Coverages

   Each insurance policy required by this clause shall be endorsed to state that coverage shall not be suspended, voided, canceled by either party, reduced in coverage or in limits except after thirty (30) days' prior written notice by certified mail, return receipt requested, has been given to the Agency.

E. ACCEPTABILITY OF INSURERS

Insurance is to be placed with insurers with an A.M. Best's rating of **A-:VI or higher**. This rating requirement may be waived for workers' compensation coverage only.

F. VERIFICATION OF COVERAGE

Contractor shall furnish the Agency with certificates of insurance effecting coverage required. The certificates for each insurance policy are to be signed by a person authorized by that insurer to bind coverage on its behalf. The certificates are to be received and approved by the Agency before work commences. The Agency reserves the right to require complete, certified copies of all required insurance policies at any time.

*** INSURANCE AND INDEMNIFICATION ***

** EXHIBIT A **

INDEMNIFICATION AGREEMENT

The _____ agrees to protect, defend, indemnify, save, and hold harmless the
{Contractor/Subcontractor/Lessee/Supplier}

State of Louisiana, all State Departments, Agencies, Boards and Commissions, its officers, agents, servants and employees, including volunteers, from and against any and all claims, demands, expenses and liability arising out of injury or death to any person or the damage, loss or destruction of any property which may occur or in any way grow out of any act or omission of _____ , its agents, servants, and
{Contractor/Subcontractor/Lessee/Supplier}

employees, or any and all costs, expenses and/or attorney fees incurred by

_____ as a result of any claims, demands, and/or causes of action except
{Contractor/Subcontractor/Lessee/Supplier}

those claims, demands, and/or causes of action arising out of the negligence of the State of Louisiana, all State Departments, Agencies, Boards, Commissions, its agents, representatives, and/or employees.

_____ agrees to investigate, handle, respond to, provide defense for and
{Contractor/Subcontractor/Lessee/Supplier}

defend any such claims, demands, or suits at its sole expense and agrees to bear all other costs and expenses related thereto, even if they (claims, etc.) are groundless, false or fraudulent.

Accepted by _____
Company Name

_____
Signature

_____
Title

Date Accepted _____

Is Certificate of Insurance Attached? _____Yes _____No

Contract No. _____ for _____
State Agency Number and Name

PURPOSE OF CONTRACT:_____

_____

_____

_____

BID BOND

FOR

UNIVERSITY OF NEW ORLEANS PROJECT

_____
(Date)

KNOW ALL MEN BY THESE PRESENTS:

That _____of

_____, as Principal, and

_____, as Surety, are held and firmly bound unto the State of Louisiana, and The University of New Orleans, in the full and just sum of five (5%) percent of the total amount of this proposal, including all alternates, lawful money of the United States, for payment of which sum, well and truly be made, we bind ourselves, our heirs, executors, administrators, successors and assigns, jointly and severally firmly by these presents.

Surety represents that it is listed on the current U.S. Department of the Treasury Financial Management Service list of approved bonding companies as approved for an amount equal to or greater than the amount for which it obligates itself in this instrument or that it is a Louisiana-domiciled insurance company with at least an A- rating in the latest printing of the A.M. Best's Key Rating Guide. If surety qualifies by virtue of its Best's listing, the Bond amount may not exceed ten percent of policyholders' surplus as shown in the latest A.M. Best's Key Rating Guide.

The Surety further represents that it is licensed to do business in the State of Louisiana and that this Bond is signed by surety's agent or attorney-in-fact. This Bid Bond is accompanied by appropriate power of attorney.

THE CONDITION OF THIS OBLIGATION IS SUCH that, whereas said Principal is herewith submitting its proposal to the obligee on a Contract for:

_____

_____

NOW, THEREFORE, if the said Contract be awarded to the Principal and the Principal shall, within such time as may be specified, enter into the Contract in writing and give a good and sufficient bond to secure the performance of the terms and conditions of the Contract with surety acceptable to the obligee, then this obligation shall be void; otherwise this obligation shall become due and payable.

_____ _____

PRINCIPAL (BIDDER) SURETY

BY_____ BY_____

AUTHORIZED OFFICER-OWNER-PARTNER AGENT OR ATTORNEY-IN-FACT

(SEAL)

CONTRACT BETWEEN UNIVERSITY AND CONTRACTOR

This agreement made and entered into at New Orleans, Louisiana, this____ day of_____, 200_, by and between The University of New Orleans, herein represented by Troy A. Bacino, Assistant Director of Purchasing, University of New Orleans, party of the first part and hereinafter sometimes called the

University; and _____
(Contractor)

herein represented by_____
(Name and title)

Party of the second part and hereinafter sometimes called the Contractor:

WITNESSETH, THAT the University and the Contractor, for the considerations hereinafter named, agree as follows, that:

1. The Advertisement for Bids (if advertised)
2. The Bid Proposal
3. The General Conditions and Instructions
4. Bonds
5. The Specifications
6. The Following Enumerated Plans:
7. The Following Enumerated Addenda:

are all hereby made a part of this Contract to the same extent as if incorporated here in full.

SAMPLE

CONTRACT BETWEEN UNIVERSITY AND CONTRACTOR

The Contractor agrees to furnish all materials, labor, tools, equipment and other facilities necessary and to perform all work required for:

_____

_____

In accordance with this Contract and their proposal dated _____ all in strict accord with the requirements of the Contract.

The work to be performed under this contract shall be commenced immediately after award is made to the successful bidder and notification by the University that the work shall start, and shall be fully completed within the time stated in the Instructions to Bidders, subject to pertinent provisions of the General Conditions of the Contract Documents.

The amount to be paid to the Contractor by the University, subject to modification on account of changes as herein provided and/or as may be agreed to in writing by both parties to this contract
is _____
(figures)
_____
(in words)

The University shall make payments on account of the Contract as provided in the Instructions and Specifications.

Performance and Payment Bond: To these presents personally came and intervened , herein acting for _____, a corporation organized and existing under the laws of the State of _____, and duly authorized to transact business in the state of Louisiana, as surety, who declared that having taken cognizance of this Contract and of the Construction Documents mentioned herein, he hereby in his capacity as its Attorney in Fact obligates his said company, as surety for the said Contractor, unto the said University, up to the sum of _____. The condition of this Performance and Payment Bond shall be that should the Contractor herein not perform the contract in accordance with the terms and conditions hereof, or should said Contractor not fully indemnify and save harmless the University, from all cost and damages which he may suffer by said Contractor's nonperformance or should said Contractor not pay all persons who have and fulfill obligations to perform labor and/or furnish materials in the prosecution of the work provided for herein, including by way of example workmen, laborers, mechanics, and furnishers of materials, machinery, equipment and fixtures, then said Surety agrees and is bound to so perform the Contract upon demand by the University and make said payments in accordance with law.

Provided, that any alterations which may be made in the terms, of the Contract or in the work to be done under it, or the giving by the University of any extensions of time for the performance of the Contract, or any other forbearance on the part of either the University or the Contractor to the other shall not in any way release the Contractor or the Surety from their liability hereunder, notice to the Surety of any such alterations, extensions or other forbearance being hereby waived.

SAMPLE

In Witness whereof, the parties hereto on the day and year first above written have executed this agreement in _____ counterparts, each of which shall, without proof or accountancy for the other counterparts, be deemed an original thereof.

This Performance and Payment Bond is accompanied by appropriate Power of Attorney.

WITNESSES:

_____ _____
(CONTRACTOR)

_____ BY:_____
(TITLE)

THE UNIVERSITY OF NEW ORLEANS

_____ BY:_____

_____ _____
(TITLE)

_____ _____
(SURETY)

_____ _____
(ATTORNEY-IN-FACT)

SAMPLE

STATE OF LOUISIANA
PARISH OF _____

AFFIDAVIT ATTESTING THAT PUBLIC CONTRACT
WAS NOT, NOR WILL NOT BE SECURED
THROUGH EMPLOYMENT OR PAYMENT OF SOLICITOR

KNOW ALL MEN BY THESE PRESENT, that a public contract is contemplated between the UNIVERSITY OF NEW ORLEANS and:

_____
(contractor)

represented by _____, _____
(title)

who attests that he is empowered and authorized to execute said documents.

FURTHER, _____, who being duly sworn, does depose and attest that:

(1) Affiant employed no person, corporation, firm, association, or other organization, either directly or indirectly, to secure the public contract under which he received payment, other than persons regularly employed by the affiant whose services in connection with the construction of the public building or project or in securing the public contract were in the regular course of their duties for affiant; and

(2) No part of the contract price received by affiant was paid or will be paid to any person, corporation, firm, association, or other organization for soliciting the contract, other than the payment of their normal compensation to persons regularly employed by the affiant whose services in connection with the construction of the public building or project were in the regular course of their duties for affiant.

WITNESSES:

_____ _____

BEFORE ME, the undersigned authority, personally appeared, who being duly sworn, deposes the states that the above is true and correct in all respects recited.

_____

SWORN TO AND SUBSCRIBED before me this __ day of ___, 20___

_____
NOTARY PUBLIC

SAMPLE

_____ _____

Name of Project **Project No.**

STATE OF _____

PARISH OF _____

ATTESTATIONS AFFIDAVIT

Before me, the undersigned notary public, duly commissioned and qualified in and for the parish and state aforesaid, personally came and appeared Affiant, who after being duly sworn, attested as follows:

LA. R.S. 38:2227 PAST CRIMINAL CONVICTIONS OF BIDDERS

A. No sole proprietor or individual partner, incorporator, director, manager, officer, organizer, or member who has a minimum of a ten percent (10%) ownership in the bidding entity named below has been convicted of, or has entered a plea of guilty or nolo contendere to any of the following state crimes or equivalent federal crimes:

(a) Public bribery (R.S. 14:118)
(b) Corrupt influencing (R.S. 14:120)
(c) Extortion (R.S. 14:66)
(d) Money laundering (R.S. 14:230)

B. Within the past five years from the project bid date, no sole proprietor or individual partner, incorporator, director, manager, officer, organizer, or member who has a minimum of a ten percent (10%) ownership in the bidding entity named below has been convicted of, or has entered a plea of guilty or nolo contendere to any of the following state crimes or equivalent federal crimes, during the solicitation or execution of a contract or bid awarded pursuant to the provisions of Chapter 10 of Title 38 of the Louisiana Revised Statutes:

(a) Theft (R.S. 14:67)
(b) Identity Theft (R.S. 14:67.16)
(c) Theft of a business record (R.S.14:67.20)
(d) False accounting (R.S. 14:70)
(e) Issuing worthless checks (R.S. 14:71)
(f) Bank fraud (R.S. 14:71.1)
(g) Forgery (R.S. 14:72)
(h) Contractors; misapplication of payments (R.S. 14:202)
(i) Malfeasance in office (R.S. 14:134)

LA. R.S. 38:2212.10 Verification of Employees

A. At the time of bidding, Appearer is registered and participates in a status verification system to verify that all new hires in the state of Louisiana are legal citizens of the United States or are legal aliens.

B. If awarded the contract, Appearer shall continue, during the term of the contract, to utilize a status verification system to verify the legal status of all new employees in the state of Louisiana.

C. If awarded the contract, Appearer shall require all subcontractors to submit to it a sworn affidavit verifying compliance with Paragraphs (A) and (B) of this Subsection.

_____ _____

Name of Project **Project No.**

LA. R.S. 23:1726(B) Certification Regarding Unpaid Workers Compensation Insurance

A. R.S. 23:1726 prohibits any entity against whom an assessment under Part X of Chapter 11 of Title 23 of the Louisiana Revised Statutes of 1950 (Alternative Collection Procedures & Assessments) is in effect, and whose right to appeal that assessment is exhausted, from submitting a bid or proposal for or obtaining any contract pursuant to Chapter 10 of Title 38 of the Louisiana Revised Statutes of 1950 and Chapters 16 and 17 of Title 39 of the Louisiana Revised Statutes of 1950.

B. By signing this bid /proposal, Affiant certifies that no such assessment is in effect against the bidding / proposing entity.

_____ _____

NAME OF BIDDER **NAME OF AUTHORIZED SIGNATORY OF BIDDER**

_____ _____

DATE **TITLE OF AUTHORIZED SIGNATORY OF BIDDER**

_____

SIGNATURE OF AUTHORIZED
SIGNATORY OF BIDDER/AFFIANT

Sworn to and subscribed before me by Affiant on the _____ day of _____ , 20___ .

_____

Notary Public

AIA® Document A201® – 2017

General Conditions of the Contract for Construction

for the following PROJECT:
(Name and location or address)

The University of New Orleans
Chemistry Lab Upgrades – Phase II
Chemistry Building
2000 Lakeshore Drive
New Orleans, LA 70148

THE OWNER:
(Name, legal status and address)

The University of New Orleans
2000 Lakeshore Drive
New Orleans, LA 70148

THE ARCHITECT:
(Name, legal status and address)

Holly & Smith Architects, APAC
208 North Cate Street
Hammond, LA 70401

ADDITIONS AND DELETIONS:
The author of this document has added information needed for its completion. The author may also have revised the text of the original AIA standard form. An *Additions and Deletions Report* that notes added information as well as revisions to the standard form text is available from the author and should be reviewed. A vertical line in the left margin of this document indicates where the author has added necessary information and where the author has added to or deleted from the original AIA text.

This document has important legal consequences. Consultation with an attorney is encouraged with respect to its completion or modification.

For guidance in modifying this document to include supplementary conditions, see AIA Document A503™, Guide for Supplementary Conditions.

TABLE OF ARTICLES

1 GENERAL PROVISIONS

2 OWNER

3 CONTRACTOR

4 ARCHITECT

5 SUBCONTRACTORS

6 CONSTRUCTION BY OWNER OR BY SEPARATE CONTRACTORS

7 CHANGES IN THE WORK

8 TIME

9 PAYMENTS AND COMPLETION

10 PROTECTION OF PERSONS AND PROPERTY

11 INSURANCE AND BONDS

12 UNCOVERING AND CORRECTION OF WORK

13 MISCELLANEOUS PROVISIONS

Init.
/

AIA Document A201® – 2017. Copyright © 1911, 1915, 1918, 1925, 1937, 1951, 1958, 1961, 1963, 1966, 1970, 1976, 1987, 1997, 2007 and 2017 by The American Institute of Architects. All rights reserved. The "American Institute of Architects," "AIA," the AIA Logo, "A201," and "AIA Contract Documents" are registered trademarks and may not be used without permission. This document was produced by AIA software at 12:13:54 ET on 05/05/2021 under Order No.4897197182 which expires on 06/18/2021, is not for resale, is licensed for one-time use only, and may only be used in accordance with the AIA Contract Documents® Terms of Service. To report copyright violations, e-mail copyright@aia.org.
User Notes: (1416637268)

14 TERMINATION OR SUSPENSION OF THE CONTRACT

15 CLAIMS AND DISPUTES

AIA Document A201® – 2017. Copyright © 1911, 1915, 1918, 1925, 1937, 1951, 1958, 1961, 1963, 1966, 1970, 1976, 1987, 1997, 2007 and 2017 by The American Institute of Architects. All rights reserved. The "American Institute of Architects," "AIA," the AIA Logo, "A201," and "AIA Contract Documents" are registered trademarks and may not be used without permission. This document was produced by AIA software at 12:13:54 ET on 05/05/2021 under Order No.4897197182 which expires on 06/18/2021, is not for resale, is licensed for one-time use only, and may only be used in accordance with the AIA Contract Documents® Terms of Service. To report copyright violations, e-mail copyright@aia.org.
User Notes: (1416637268)

INDEX
(Topics and numbers in bold are Section headings.)

Acceptance of Nonconforming Work
9.6.6, 9.9.3, **12.3**
Acceptance of Work
9.6.6, 9.8.2, 9.9.3, 9.10.1, 9.10.3, 12.3
Access to Work
3.16, 6.2.1, 12.1
Accident Prevention
10
Acts and Omissions
3.2, 3.3.2, 3.12.8, 3.18, 4.2.3, 8.3.1, 9.5.1, 10.2.5, 10.2.8, 13.3.2, 14.1, 15.1.2, 15.2
Addenda
1.1.1
Additional Costs, Claims for
3.7.4, 3.7.5, 10.3.2, 15.1.5
Additional Inspections and Testing
9.4.2, 9.8.3, 12.2.1, **13.4**
Additional Time, Claims for
3.2.4, 3.7.4, 3.7.5, 3.10.2, 8.3.2, **15.1.6**
Administration of the Contract
3.1.3, **4.2**, 9.4, 9.5
Advertisement or Invitation to Bid
1.1.1
Aesthetic Effect
4.2.13
Allowances
3.8
Applications for Payment
4.2.5, 7.3.9, 9.2, **9.3**, 9.4, 9.5.1, 9.5.4, 9.6.3, 9.7, 9.10
Approvals
2.1.1, 2.3.1, 2.5, 3.1.3, 3.10.2, 3.12.8, 3.12.9, 3.12.10.1, 4.2.7, 9.3.2, 13.4.1
Arbitration
8.3.1, 15.3.2, **15.4**
ARCHITECT
4
Architect, Definition of
4.1.1
Architect, Extent of Authority
2.5, 3.12.7, 4.1.2, 4.2, 5.2, 6.3, 7.1.2, 7.3.4, 7.4, 9.2, 9.3.1, 9.4, 9.5, 9.6.3, 9.8, 9.10.1, 9.10.3, 12.1, 12.2.1, 13.4.1, 13.4.2, 14.2.2, 14.2.4, 15.1.4, 15.2.1
Architect, Limitations of Authority and Responsibility
2.1.1, 3.12.4, 3.12.8, 3.12.10, 4.1.2, 4.2.1, 4.2.2, 4.2.3, 4.2.6, 4.2.7, 4.2.10, 4.2.12, 4.2.13, 5.2.1, 7.4, 9.4.2, 9.5.4, 9.6.4, 15.1.4, 15.2
Architect's Additional Services and Expenses
2.5, 12.2.1, 13.4.2, 13.4.3, 14.2.4
Architect's Administration of the Contract
3.1.3, 3.7.4, 15.2, 9.4.1, 9.5
Architect's Approvals
2.5, 3.1.3, 3.5, 3.10.2, 4.2.7
Architect's Authority to Reject Work
3.5, 4.2.6, 12.1.2, 12.2.1
Architect's Copyright
1.1.7, 1.5
Architect's Decisions
3.7.4, 4.2.6, 4.2.7, 4.2.11, 4.2.12, 4.2.13, 4.2.14, 6.3, 7.3.4, 7.3.9, 8.1.3, 8.3.1, 9.2, 9.4.1, 9.5, 9.8.4, 9.9.1, 13.4.2, 15.2
Architect's Inspections
3.7.4, 4.2.2, 4.2.9, 9.4.2, 9.8.3, 9.9.2, 9.10.1, 13.4
Architect's Instructions
3.2.4, 3.3.1, 4.2.6, 4.2.7, 13.4.2
Architect's Interpretations
4.2.11, 4.2.12
Architect's Project Representative
4.2.10
Architect's Relationship with Contractor
1.1.2, 1.5, 2.3.3, 3.1.3, 3.2.2, 3.2.3, 3.2.4, 3.3.1, 3.4.2, 3.5, 3.7.4, 3.7.5, 3.9.2, 3.9.3, 3.10, 3.11, 3.12, 3.16, 3.18, 4.1.2, 4.2, 5.2, 6.2.2, 7, 8.3.1, 9.2, 9.3, 9.4, 9.5, 9.7, 9.8, 9.9, 10.2.6, 10.3, 11.3, 12, 13.3.2, 13.4, 15.2
Architect's Relationship with Subcontractors
1.1.2, 4.2.3, 4.2.4, 4.2.6, 9.6.3, 9.6.4, 11.3
Architect's Representations
9.4.2, 9.5.1, 9.10.1
Architect's Site Visits
3.7.4, 4.2.2, 4.2.9, 9.4.2, 9.5.1, 9.9.2, 9.10.1, 13.4
Asbestos
10.3.1
Attorneys' Fees
3.18.1, 9.6.8, 9.10.2, 10.3.3
Award of Separate Contracts
6.1.1, 6.1.2
Award of Subcontracts and Other Contracts for Portions of the Work
5.2
Basic Definitions
1.1
Bidding Requirements
1.1.1
Binding Dispute Resolution
8.3.1, 9.7, 11.5, 13.1, 15.1.2, 15.1.3, 15.2.1, 15.2.5, 15.2.6.1, 15.3.1, 15.3.2, 15.3.3, 15.4.1
Bonds, Lien
7.3.4.4, 9.6.8, 9.10.2, 9.10.3
Bonds, Performance, and Payment
7.3.4.4, 9.6.7, 9.10.3, **11.1.2**, 11.1.3, **11.5**
Building Information Models Use and Reliance
1.8
Building Permit
3.7.1
Capitalization
1.3
Certificate of Substantial Completion
9.8.3, 9.8.4, 9.8.5

AIA Document A201® – 2017. Copyright © 1911, 1915, 1918, 1925, 1937, 1951, 1958, 1961, 1963, 1966, 1970, 1976, 1987, 1997, 2007 and 2017 by The American Institute of Architects. All rights reserved. The "American Institute of Architects," "AIA," the AIA Logo, "A201," and "AIA Contract Documents" are registered trademarks and may not be used without permission. This document was produced by AIA software at 12:13:54 ET on 05/05/2021 under Order No.4897197182 which expires on 06/18/2021, is not for resale, is licensed for one-time use only, and may only be used in accordance with the AIA Contract Documents® Terms of Service. To report copyright violations, e-mail copyright@aia.org.
User Notes:
(1416637268)

Certificates for Payment
4.2.1, 4.2.5, 4.2.9, 9.3.3, **9.4**, 9.5, 9.6.1, 9.6.6, 9.7, 9.10.1, 9.10.3, 14.1.1.3, 14.2.4, 15.1.4
Certificates of Inspection, Testing or Approval
13.4.4
Certificates of Insurance
9.10.2
Change Orders
1.1.1, 3.4.2, 3.7.4, 3.8.2.3, 3.11, 3.12.8, 4.2.8, 5.2.3, 7.1.2, 7.1.3, **7.2**, 7.3.2, 7.3.7, 7.3.9, 7.3.10, 8.3.1, 9.3.1.1, 9.10.3, 10.3.2, 11.2, 11.5, 12.1.2
Change Orders, Definition of
7.2.1
CHANGES IN THE WORK
2.2.2, 3.11, 4.2.8, **7**, 7.2.1, 7.3.1, 7.4, 8.3.1, 9.3.1.1, 11.5
Claims, Definition of
15.1.1
Claims, Notice of
1.6.2, 15.1.3
CLAIMS AND DISPUTES
3.2.4, 6.1.1, 6.3, 7.3.9, 9.3.3, 9.10.4, 10.3.3, **15**, 15.4
Claims and Timely Assertion of Claims
15.4.1
Claims for Additional Cost
3.2.4, 3.3.1, 3.7.4, 7.3.9, 9.5.2, 10.2.5, 10.3.2, **15.1.5**
Claims for Additional Time
3.2.4, 3.3.1, 3.7.4, 6.1.1, 8.3.2, 9.5.2, 10.3.2, **15.1.6**
Concealed or Unknown Conditions, Claims for
3.7.4
Claims for Damages
3.2.4, 3.18, 8.3.3, 9.5.1, 9.6.7, 10.2.5, 10.3.3, 11.3, 11.3.2, 14.2.4, 15.1.7
Claims Subject to Arbitration
15.4.1
Cleaning Up
3.15, 6.3
Commencement of the Work, Conditions Relating to
2.2.1, 3.2.2, 3.4.1, 3.7.1, 3.10.1, 3.12.6, 5.2.1, 5.2.3, 6.2.2, 8.1.2, 8.2.2, 8.3.1, 11.1, 11.2, **15.1.5**
Commencement of the Work, Definition of
8.1.2
Communications
3.9.1, **4.2.4**
Completion, Conditions Relating to
3.4.1, 3.11, 3.15, 4.2.2, 4.2.9, 8.2, 9.4.2, 9.8, 9.9.1, 9.10, 12.2, 14.1.2, 15.1.2
COMPLETION, PAYMENTS AND
9
Completion, Substantial
3.10.1, 4.2.9, 8.1.1, 8.1.3, 8.2.3, 9.4.2, 9.8, 9.9.1, 9.10.3, 12.2, 15.1.2
Compliance with Laws
2.3.2, 3.2.3, 3.6, 3.7, 3.12.10, 3.13, 9.6.4, 10.2.2, 13.1, 13.3, 13.4.1, 13.4.2, 13.5, 14.1.1, 14.2.1.3, 15.2.8, 15.4.2, 15.4.3
Concealed or Unknown Conditions
3.7.4, 4.2.8, 8.3.1, 10.3
Conditions of the Contract
1.1.1, 6.1.1, 6.1.4
Consent, Written
3.4.2, 3.14.2, 4.1.2, 9.8.5, 9.9.1, 9.10.2, 9.10.3, 13.2, 15.4.4.2
Consolidation or Joinder
15.4.4
CONSTRUCTION BY OWNER OR BY SEPARATE CONTRACTORS
1.1.4, **6**
Construction Change Directive, Definition of
7.3.1
Construction Change Directives
1.1.1, 3.4.2, 3.11, 3.12.8, 4.2.8, 7.1.1, 7.1.2, 7.1.3, **7.3**, 9.3.1.1
Construction Schedules, Contractor's
3.10, 3.11, 3.12.1, 3.12.2, 6.1.3, 15.1.6.2
Contingent Assignment of Subcontracts
5.4, 14.2.2.2
Continuing Contract Performance
15.1.4
Contract, Definition of
1.1.2
CONTRACT, TERMINATION OR SUSPENSION OF THE
5.4.1.1, 5.4.2, 11.5, **14**
Contract Administration
3.1.3, 4, 9.4, 9.5
Contract Award and Execution, Conditions Relating to
3.7.1, 3.10, 5.2, 6.1
Contract Documents, Copies Furnished and Use of
1.5.2, 2.3.6, 5.3
Contract Documents, Definition of
1.1.1
Contract Sum
2.2.2, 2.2.4, 3.7.4, 3.7.5, 3.8, 3.10.2, 5.2.3, 7.3, 7.4, **9.1**, 9.2, 9.4.2, 9.5.1.4, 9.6.7, 9.7, 10.3.2, 11.5, 12.1.2, 12.3, 14.2.4, 14.3.2, 15.1.4.2, **15.1.5, 15.2.5**
Contract Sum, Definition of
9.1
Contract Time
1.1.4, 2.2.1, 2.2.2, 3.7.4, 3.7.5, 3.10.2, 5.2.3, 6.1.5, 7.2.1.3, 7.3.1, 7.3.5, 7.3.6, 7, 7, 7.3.10, 7.4, 8.1.1, 8.2.1, 8.2.3, 8.3.1, 9.5.1, 9.7, 10.3.2, 12.1.1, 12.1.2, 14.3.2, 15.1.4.2, 15.1.6.1, 15.2.5
Contract Time, Definition of
8.1.1
CONTRACTOR
3
Contractor, Definition of
3.1, 6.1.2
Contractor's Construction and Submittal Schedules
3.10, 3.12.1, 3.12.2, 4.2.3, 6.1.3, 15.1.6.2

AIA Document A201® – 2017. Copyright © 1911, 1915, 1918, 1925, 1937, 1951, 1958, 1961, 1963, 1966, 1970, 1976, 1987, 1997, 2007 and 2017 by The American Institute of Architects. All rights reserved. The "American Institute of Architects," "AIA," the AIA Logo, "A201," and "AIA Contract Documents" are registered trademarks and may not be used without permission. This document was produced by AIA software at 12:13:54 ET on 05/05/2021 under Order No.4897197182 which expires on 06/18/2021, is not for resale, is licensed for one-time use only, and may only be used in accordance with the AIA Contract Documents® Terms of Service. To report copyright violations, e-mail copyright@aia.org.
User Notes:

Contractor's Employees
2.2.4, 3.3.2, 3.4.3, 3.8.1, 3.9, 3.18.2, 4.2.3, 4.2.6, 10.2, 10.3, 11.3, 14.1, 14.2.1.1
Contractor's Liability Insurance
11.1
Contractor's Relationship with Separate Contractors and Owner's Forces
3.12.5, 3.14.2, 4.2.4, 6, 11.3, 12.2.4
Contractor's Relationship with Subcontractors
1.2.2, 2.2.4, 3.3.2, 3.18.1, 3.18.2, 4.2.4, 5, 9.6.2, 9.6.7, 9.10.2, 11.2, 11.3, 11.4
Contractor's Relationship with the Architect
1.1.2, 1.5, 2.3.3, 3.1.3, 3.2.2, 3.2.3, 3.2.4, 3.3.1, 3.4.2, 3.5.1, 3.7.4, 3.10, 3.11, 3.12, 3.16, 3.18, 4.2, 5.2, 6.2.2, 7, 8.3.1, 9.2, 9.3, 9.4, 9.5, 9.7, 9.8, 9.9, 10.2.6, 10.3, 11.3, 12, 13.4, 15.1.3, 15.2.1
Contractor's Representations
3.2.1, 3.2.2, 3.5, 3.12.6, 6.2.2, 8.2.1, 9.3.3, 9.8.2
Contractor's Responsibility for Those Performing the Work
3.3.2, 3.18, 5.3, 6.1.3, 6.2, 9.5.1, 10.2.8
Contractor's Review of Contract Documents
3.2
Contractor's Right to Stop the Work
2.2.2, 9.7
Contractor's Right to Terminate the Contract
14.1
Contractor's Submittals
3.10, 3.11, 3.12, 4.2.7, 5.2.1, 5.2.3, 9.2, 9.3, 9.8.2, 9.8.3, 9.9.1, 9.10.2, 9.10.3
Contractor's Superintendent
3.9, 10.2.6
Contractor's Supervision and Construction Procedures
1.2.2, 3.3, 3.4, 3.12.10, 4.2.2, 4.2.7, 6.1.3, 6.2.4, 7.1.3, 7.3.4, 7.3.6, 8.2, 10, 12, 14, 15.1.4
Coordination and Correlation
1.2, 3.2.1, 3.3.1, 3.10, 3.12.6, 6.1.3, 6.2.1
Copies Furnished of Drawings and Specifications
1.5, 2.3.6, 3.11
Copyrights
1.5, **3.17**
Correction of Work
2.5, 3.7.3, 9.4.2, 9.8.2, 9.8.3, 9.9.1, 12.1.2, **12.2**, 12.3, 15.1.3.1, 15.1.3.2, 15.2.1
Correlation and Intent of the Contract Documents
1.2
Cost, Definition of
7.3.4
Costs
2.5, 3.2.4, 3.7.3, 3.8.2, 3.15.2, 5.4.2, 6.1.1, 6.2.3, 7.3.3.3, 7.3.4, 7.3.8, 7.3.9, 9.10.2, 10.3.2, 10.3.6, 11.2, 12.1.2, 12.2.1, 12.2.4, 13.4, 14
Cutting and Patching
3.14, 6.2.5
Damage to Construction of Owner or Separate Contractors
3.14.2, 6.2.4, 10.2.1.2, 10.2.5, 10.4, 12.2.4
Damage to the Work
3.14.2, 9.9.1, 10.2.1.2, 10.2.5, 10.4, 12.2.4
Damages, Claims for
3.2.4, 3.18, 6.1.1, 8.3.3, 9.5.1, 9.6.7, 10.3.3, 11.3.2, 11.3, 14.2.4, 15.1.7
Damages for Delay
6.2.3, 8.3.3, 9.5.1.6, 9.7, 10.3.2, 14.3.2
Date of Commencement of the Work, Definition of
8.1.2
Date of Substantial Completion, Definition of
8.1.3
Day, Definition of
8.1.4
Decisions of the Architect
3.7.4, 4.2.6, 4.2.7, 4.2.11, 4.2.12, 4.2.13, 6.3, 7.3.4, 7.3.9, 8.1.3, 8.3.1, 9.2, 9.4, 9.5.1, 9.8.4, 9.9.1, 13.4.2, 14.2.2, 14.2.4, 15.1, 15.2
Decisions to Withhold Certification
9.4.1, **9.5**, 9.7, 14.1.1.3
Defective or Nonconforming Work, Acceptance, Rejection and Correction of
2.5, 3.5, 4.2.6, 6.2.3, 9.5.1, 9.5.3, 9.6.6, 9.8.2, 9.9.3, 9.10.4, 12.2.1
Definitions
1.1, 2.1.1, 3.1.1, 3.5, 3.12.1, 3.12.2, 3.12.3, 4.1.1, 5.1, 6.1.2, 7.2.1, 7.3.1, 8.1, 9.1, 9.8.1, 15.1.1
Delays and Extensions of Time
3.2, **3.7.4**, 5.2.3, 7.2.1, 7.3.1, **7.4**, **8.3**, 9.5.1, **9.7**, 10.3.2, **10.4**, 14.3.2, **15.1.6**, 15.2.5
Digital Data Use and Transmission
1.7
Disputes
6.3, 7.3.9, 15.1, 15.2
Documents and Samples at the Site
3.11
Drawings, Definition of
1.1.5
Drawings and Specifications, Use and Ownership of
3.11
Effective Date of Insurance
8.2.2
Emergencies
10.4, 14.1.1.2, **15.1.5**
Employees, Contractor's
3.3.2, 3.4.3, 3.8.1, 3.9, 3.18.2, 4.2.3, 4.2.6, 10.2, 10.3.3, 11.3, 14.1, 14.2.1.1
Equipment, Labor, or Materials
1.1.3, 1.1.6, 3.4, 3.5, 3.8.2, 3.8.3, 3.12, 3.13, 3.15.1, 4.2.6, 4.2.7, 5.2.1, 6.2.1, 7.3.4, 9.3.2, 9.3.3, 9.5.1.3, 9.10.2, 10.2.1, 10.2.4, 14.2.1.1, 14.2.1.2
Execution and Progress of the Work
1.1.3, 1.2.1, 1.2.2, 2.3.4, 2.3.6, 3.1, 3.3.1, 3.4.1, 3.7.1, 3.10.1, 3.12, 3.14, 4.2, 6.2.2, 7.1.3, 7.3.6, 8.2, 9.5.1, 9.9.1, 10.2, 10.3, 12.1, 12.2, 14.2, 14.3.1, 15.1.4

AIA Document A201® – 2017. Copyright © 1911, 1915, 1918, 1925, 1937, 1951, 1958, 1961, 1963, 1966, 1970, 1976, 1987, 1997, 2007 and 2017 by The American Institute of Architects. All rights reserved. The "American Institute of Architects," "AIA," the AIA Logo, "A201," and "AIA Contract Documents" are registered trademarks and may not be used without permission. This document was produced by AIA software at 12:13:54 ET on 05/05/2021 under Order No.4897197182 which expires on 06/18/2021, is not for resale, is licensed for one-time use only, and may only be used in accordance with the AIA Contract Documents® Terms of Service. To report copyright violations, e-mail copyright@aia.org.
User Notes:
(1416637268)

Extensions of Time
3.2.4, 3.7.4, 5.2.3, 7.2.1, 7.3, 7.4, 9.5.1, 9.7, 10.3.2, 10.4, 14.3, 15.1.6, **15.2.5**
Failure of Payment
9.5.1.3, **9.7**, 9.10.2, 13.5, 14.1.1.3, 14.2.1.2
Faulty Work
(See Defective or Nonconforming Work)
Final Completion and Final Payment
4.2.1, 4.2.9, 9.8.2, **9.10**, 12.3, 14.2.4, 14.4.3
Financial Arrangements, Owner's
2.2.1, 13.2.2, 14.1.1.4
GENERAL PROVISIONS
1
Governing Law
13.1
Guarantees (See Warranty)
Hazardous Materials and Substances
10.2.4, **10.3**
Identification of Subcontractors and Suppliers
5.2.1
Indemnification
3.17, **3.18**, 9.6.8, 9.10.2, 10.3.3, 11.3
Information and Services Required of the Owner
2.1.2, **2.2**, 2.3, 3.2.2, 3.12.10.1, 6.1.3, 6.1.4, 6.2.5, 9.6.1, 9.9.2, 9.10.3, 10.3.3, 11.2, 13.4.1, 13.4.2, 14.1.1.4, 14.1.4, 15.1.4
Initial Decision
15.2
Initial Decision Maker, Definition of
1.1.8
Initial Decision Maker, Decisions
14.2.4, 15.1.4.2, 15.2.1, 15.2.2, 15.2.3, 15.2.4, 15.2.5
Initial Decision Maker, Extent of Authority
14.2.4, 15.1.4.2, 15.2.1, 15.2.2, 15.2.3, 15.2.4, 15.2.5
Injury or Damage to Person or Property
10.2.8, 10.4
Inspections
3.1.3, 3.3.3, 3.7.1, 4.2.2, 4.2.6, 4.2.9, 9.4.2, 9.8.3, 9.9.2, 9.10.1, 12.2.1, 13.4
Instructions to Bidders
1.1.1
Instructions to the Contractor
3.2.4, 3.3.1, 3.8.1, 5.2.1, 7, 8.2.2, 12, 13.4.2
Instruments of Service, Definition of
1.1.7
Insurance
6.1.1, 7.3.4, 8.2.2, 9.3.2, 9.8.4, 9.9.1, 9.10.2, 10.2.5, **11**
Insurance, Notice of Cancellation or Expiration
11.1.4, 11.2.3
Insurance, Contractor's Liability
11.1
Insurance, Effective Date of
8.2.2, 14.4.2
Insurance, Owner's Liability
11.2
Insurance, Property
10.2.5, 11.2, 11.4, 11.5
Insurance, Stored Materials
9.3.2
INSURANCE AND BONDS
11
Insurance Companies, Consent to Partial Occupancy
9.9.1
Insured loss, Adjustment and Settlement of
11.5
Intent of the Contract Documents
1.2.1, 4.2.7, 4.2.12, 4.2.13
Interest
13.5
Interpretation
1.1.8, 1.2.3, **1.4**, 4.1.1, 5.1, 6.1.2, 15.1.1
Interpretations, Written
4.2.11, 4.2.12
Judgment on Final Award
15.4.2
Labor and Materials, Equipment
1.1.3, 1.1.6, **3.4**, 3.5, 3.8.2, 3.8.3, 3.12, 3.13, 3.15.1, 5.2.1, 6.2.1, 7.3.4, 9.3.2, 9.3.3, 9.5.1.3, 9.10.2, 10.2.1, 10.2.4, 14.2.1.1, 14.2.1.2
Labor Disputes
8.3.1
Laws and Regulations
1.5, 2.3.2, 3.2.3, 3.2.4, 3.6, 3.7, 3.12.10, 3.13, 9.6.4, 9.9.1, 10.2.2, 13.1, 13.3.1, 13.4.2, 13.5, 14, 15.2.8, 15.4
Liens
2.1.2, 9.3.1, 9.3.3, 9.6.8, 9.10.2, 9.10.4, 15.2.8
Limitations, Statutes of
12.2.5, 15.1.2, 15.4.1.1
Limitations of Liability
3.2.2, 3.5, 3.12.10, 3.12.10.1, 3.17, 3.18.1, 4.2.6, 4.2.7, 6.2.2, 9.4.2, 9.6.4, 9.6.7, 9.6.8, 10.2.5, 10.3.3, 11.3, 12.2.5, 13.3.1
Limitations of Time
2.1.2, 2.2, 2.5, 3.2.2, 3.10, 3.11, 3.12.5, 3.15.1, 4.2.7, 5.2, 5.3, 5.4.1, 6.2.4, 7.3, 7.4, 8.2, 9.2, 9.3.1, 9.3.3, 9.4.1, 9.5, 9.6, 9.7, 9.8, 9.9, 9.10, 12.2, 13.4, 14, 15, 15.1.2, 15.1.3, 15.1.5
Materials, Hazardous
10.2.4, **10.3**
Materials, Labor, Equipment and
1.1.3, 1.1.6, 3.4.1, 3.5, 3.8.2, 3.8.3, 3.12, 3.13, 3.15.1, 5.2.1, 6.2.1, 7.3.4, 9.3.2, 9.3.3, 9.5.1.3, 9.10.2, 10.2.1.2, 10.2.4, 14.2.1.1, 14.2.1.2
Means, Methods, Techniques, Sequences and Procedures of Construction
3.3.1, 3.12.10, 4.2.2, 4.2.7, 9.4.2
Mechanic's Lien
2.1.2, 9.3.1, 9.3.3, 9.6.8, 9.10.2, 9.10.4, 15.2.8
Mediation
8.3.1, 15.1.3.2, 15.2.1, 15.2.5, 15.2.6, **15.3**, 15.4.1, 15.4.1.1
Minor Changes in the Work
1.1.1, 3.4.2, 3.12.8, 4.2.8, 7.1, **7.4**

AIA Document A201® – 2017. Copyright © 1911, 1915, 1918, 1925, 1937, 1951, 1958, 1961, 1963, 1966, 1970, 1976, 1987, 1997, 2007 and 2017 by The American Institute of Architects. All rights reserved. The "American Institute of Architects," "AIA," the AIA Logo, "A201," and "AIA Contract Documents" are registered trademarks and may not be used without permission. This document was produced by AIA software at 12:13:54 ET on 05/05/2021 under Order No.4897197182 which expires on 06/18/2021, is not for resale, is licensed for one-time use only, and may only be used in accordance with the AIA Contract Documents® Terms of Service. To report copyright violations, e-mail copyright@aia.org.
User Notes: (1416637268)

MISCELLANEOUS PROVISIONS
13
Modifications, Definition of
1.1.1
Modifications to the Contract
1.1.1, 1.1.2, 2.5, 3.11, 4.1.2, 4.2.1, 5.2.3, 7, 8.3.1, 9.7, 10.3.2
Mutual Responsibility
6.2
Nonconforming Work, Acceptance of
9.6.6, 9.9.3, **12.3**
Nonconforming Work, Rejection and Correction of
2.4, 2.5, 3.5, 4.2.6, 6.2.4, 9.5.1, 9.8.2, 9.9.3, 9.10.4, 12.2
Notice
1.6, 1.6.1, 1.6.2, 2.1.2, 2.2.2., 2.2.3, 2.2.4, 2.5, 3.2.4, 3.3.1, 3.7.4, 3.7.5, 3.9.2, 3.12.9, 3.12.10, 5.2.1, 7.4, 8.2.2 9.6.8, 9.7, 9.10.1, 10.2.8, 10.3.2, 11.5, 12.2.2.1, 13.4.1, 13.4.2, 14.1, 14.2.2, 14.4.2, 15.1.3, 15.1.5, 15.1.6, 15.4.1
Notice of Cancellation or Expiration of Insurance
11.1.4, 11.2.3
Notice of Claims
1.6.2, 2.1.2, 3.7.4, 9.6.8, 10.2.8, **15.1.3**, 15.1.5, 15.1.6, 15.2.8, 15.3.2, 15.4.1
Notice of Testing and Inspections
13.4.1, 13.4.2
Observations, Contractor's
3.2, 3.7.4
Occupancy
2.3.1, 9.6.6, 9.8
Orders, Written
1.1.1, 2.4, 3.9.2, 7, 8.2.2, 11.5, 12.1, 12.2.2.1, 13.4.2, 14.3.1
OWNER
2
Owner, Definition of
2.1.1
Owner, Evidence of Financial Arrangements
2.2, 13.2.2, 14.1.1.4
Owner, Information and Services Required of the
2.1.2, **2.2**, 2.3, 3.2.2, 3.12.10, 6.1.3, 6.1.4, 6.2.5, 9.3.2, 9.6.1, 9.6.4, 9.9.2, 9.10.3, 10.3.3, 11.2, 13.4.1, 13.4.2, 14.1.1.4, 14.1.4, 15.1.4
Owner's Authority
1.5, 2.1.1, 2.3.32.4, 2.5, 3.4.2, 3.8.1, 3.12.10, 3.14.2, 4.1.2, 4.2.4, 4.2.9, 5.2.1, 5.2.4, 5.4.1, 6.1, 6.3, 7.2.1, 7.3.1, 8.2.2, 8.3.1, 9.3.2, 9.5.1, 9.6.4, 9.9.1, 9.10.2, 10.3.2, 11.4, 11.5, 12.2.2, 12.3, 13.2.2, 14.3, 14.4, 15.2.7
Owner's Insurance
11.2
Owner's Relationship with Subcontractors
1.1.2, 5.2, 5.3, 5.4, 9.6.4, 9.10.2, 14.2.2
Owner's Right to Carry Out the Work
2.5, 14.2.2
Owner's Right to Clean Up
6.3
Owner's Right to Perform Construction and to Award Separate Contracts
6.1
Owner's Right to Stop the Work
2.4
Owner's Right to Suspend the Work
14.3
Owner's Right to Terminate the Contract
14.2, 14.4
Ownership and Use of Drawings, Specifications and Other Instruments of Service
1.1.1, 1.1.6, 1.1.7, **1.5**, 2.3.6, 3.2.2, 3.11, 3.17, 4.2.12, 5.3
Partial Occupancy or Use
9.6.6, **9.9**
Patching, Cutting and
3.14, 6.2.5
Patents
3.17
Payment, Applications for
4.2.5, 7.3.9, 9.2, **9.3**, 9.4, 9.5, 9.6.3, 9.7, 9.8.5, 9.10.1, 14.2.3, 14.2.4, 14.4.3
Payment, Certificates for
4.2.5, 4.2.9, 9.3.3, **9.4**, 9.5, 9.6.1, 9.6.6, 9.7, 9.10.1, 9.10.3, 14.1.1.3, 14.2.4
Payment, Failure of
9.5.1.3, **9.7**, 9.10.2, 13.5, 14.1.1.3, 14.2.1.2
Payment, Final
4.2.1, 4.2.9, **9.10**, 12.3, 14.2.4, 14.4.3
Payment Bond, Performance Bond and
7.3.4.4, 9.6.7, 9.10.3, **11.1.2**
Payments, Progress
9.3, **9.6**, 9.8.5, 9.10.3, 14.2.3, 15.1.4
PAYMENTS AND COMPLETION
9
Payments to Subcontractors
5.4.2, 9.5.1.3, 9.6.2, 9.6.3, 9.6.4, 9.6.7, 14.2.1.2
PCB
10.3.1
Performance Bond and Payment Bond
7.3.4.4, 9.6.7, 9.10.3, **11.1.2**
Permits, Fees, Notices and Compliance with Laws
2.3.1, **3.7**, 3.13, 7.3.4.4, 10.2.2
PERSONS AND PROPERTY, PROTECTION OF
10
Polychlorinated Biphenyl
10.3.1
Product Data, Definition of
3.12.2
Product Data and Samples, Shop Drawings
3.11, **3.12**, 4.2.7
Progress and Completion
4.2.2, **8.2**, 9.8, 9.9.1, 14.1.4, 15.1.4
Progress Payments
9.3, **9.6**, 9.8.5, 9.10.3, 14.2.3, 15.1.4

AIA Document A201® – 2017. Copyright © 1911, 1915, 1918, 1925, 1937, 1951, 1958, 1961, 1963, 1966, 1970, 1976, 1987, 1997, 2007 and 2017 by The American Institute of Architects. All rights reserved. The "American Institute of Architects," "AIA," the AIA Logo, "A201," and "AIA Contract Documents" are registered trademarks and may not be used without permission. This document was produced by AIA software at 12:13:54 ET on 05/05/2021 under Order No.4897197182 which expires on 06/18/2021, is not for resale, is licensed for one-time use only, and may only be used in accordance with the AIA Contract Documents® Terms of Service. To report copyright violations, e-mail copyright@aia.org.
User Notes: (1416637268)

Project, Definition of
1.1.4
Project Representatives
4.2.10
Property Insurance
10.2.5, **11.2**
Proposal Requirements
1.1.1
PROTECTION OF PERSONS AND PROPERTY
10
Regulations and Laws
1.5, 2.3.2, 3.2.3, 3.6, 3.7, 3.12.10, 3.13, 9.6.4, 9.9.1, 10.2.2, 13.1, 13.3, 13.4.1, 13.4.2, 13.5, 14, 15.2.8, 15.4
Rejection of Work
4.2.6, 12.2.1
Releases and Waivers of Liens
9.3.1, 9.10.2
Representations
3.2.1, 3.5, 3.12.6, 8.2.1, 9.3.3, 9.4.2, 9.5.1, 9.10.1
Representatives
2.1.1, 3.1.1, 3.9, 4.1.1, 4.2.10, 13.2.1
Responsibility for Those Performing the Work
3.3.2, 3.18, 4.2.2, 4.2.3, 5.3, 6.1.3, 6.2, 6.3, 9.5.1, 10
Retainage
9.3.1, 9.6.2, 9.8.5, 9.9.1, 9.10.2, 9.10.3
Review of Contract Documents and Field Conditions by Contractor
3.2, 3.12.7, 6.1.3
Review of Contractor's Submittals by Owner and Architect
3.10.1, 3.10.2, 3.11, 3.12, 4.2, 5.2, 6.1.3, 9.2, 9.8.2
Review of Shop Drawings, Product Data and Samples by Contractor
3.12
Rights and Remedies
1.1.2, 2.4, 2.5, 3.5, 3.7.4, 3.15.2, 4.2.6, 5.3, 5.4, 6.1, 6.3, 7.3.1, 8.3, 9.5.1, 9.7, 10.2.5, 10.3, 12.2.1, 12.2.2, 12.2.4, **13.3**, 14, 15.4
Royalties, Patents and Copyrights
3.17
Rules and Notices for Arbitration
15.4.1
Safety of Persons and Property
10.2, 10.4
Safety Precautions and Programs
3.3.1, 4.2.2, 4.2.7, 5.3, **10.1**, 10.2, 10.4
Samples, Definition of
3.12.3
Samples, Shop Drawings, Product Data and
3.11, **3.12**, 4.2.7
Samples at the Site, Documents and
3.11
Schedule of Values
9.2, 9.3.1
Schedules, Construction
3.10, 3.12.1, 3.12.2, 6.1.3, 15.1.6.2
Separate Contracts and Contractors
1.1.4, 3.12.5, 3.14.2, 4.2.4, 4.2.7, 6, 8.3.1, 12.1.2
Separate Contractors, Definition of
6.1.1
Shop Drawings, Definition of
3.12.1
Shop Drawings, Product Data and Samples
3.11, **3.12**, 4.2.7
Site, Use of
3.13, 6.1.1, 6.2.1
Site Inspections
3.2.2, 3.3.3, 3.7.1, 3.7.4, 4.2, 9.9.2, 9.4.2, 9.10.1, 13.4
Site Visits, Architect's
3.7.4, 4.2.2, 4.2.9, 9.4.2, 9.5.1, 9.9.2, 9.10.1, 13.4
Special Inspections and Testing
4.2.6, 12.2.1, 13.4
Specifications, Definition of
1.1.6
Specifications
1.1.1, **1.1.6**, 1.2.2, 1.5, 3.12.10, 3.17, 4.2.14
Statute of Limitations
15.1.2, 15.4.1.1
Stopping the Work
2.2.2, 2.4, 9.7, 10.3, 14.1
Stored Materials
6.2.1, 9.3.2, 10.2.1.2, 10.2.4
Subcontractor, Definition of
5.1.1
SUBCONTRACTORS
5
Subcontractors, Work by
1.2.2, 3.3.2, 3.12.1, 3.18, 4.2.3, 5.2.3, 5.3, 5.4, 9.3.1.2, 9.6.7
Subcontractual Relations
5.3, 5.4, 9.3.1.2, 9.6, 9.10, 10.2.1, 14.1, 14.2.1
Submittals
3.10, 3.11, 3.12, 4.2.7, 5.2.1, 5.2.3, 7.3.4, 9.2, 9.3, 9.8, 9.9.1, 9.10.2, 9.10.3
Submittal Schedule
3.10.2, 3.12.5, 4.2.7
Subrogation, Waivers of
6.1.1, **11.3**
Substances, Hazardous
10.3
Substantial Completion
4.2.9, 8.1.1, 8.1.3, 8.2.3, 9.4.2, **9.8**, 9.9.1, 9.10.3, 12.2, 15.1.2
Substantial Completion, Definition of
9.8.1
Substitution of Subcontractors
5.2.3, 5.2.4
Substitution of Architect
2.3.3
Substitutions of Materials
3.4.2, 3.5, 7.3.8
Sub-subcontractor, Definition of
5.1.2

AIA Document A201® – 2017. Copyright © 1911, 1915, 1918, 1925, 1937, 1951, 1958, 1961, 1963, 1966, 1970, 1976, 1987, 1997, 2007 and 2017 by The American Institute of Architects. All rights reserved. The "American Institute of Architects," "AIA," the AIA Logo, "A201," and "AIA Contract Documents" are registered trademarks and may not be used without permission. This document was produced by AIA software at 12:13:54 ET on 05/05/2021 under Order No.4897197182 which expires on 06/18/2021, is not for resale, is licensed for one-time use only, and may only be used in accordance with the AIA Contract Documents® Terms of Service. To report copyright violations, e-mail copyright@aia.org.
User Notes: (1416637268)

Subsurface Conditions
3.7.4
Successors and Assigns
13.2
Superintendent
3.9, 10.2.6
Supervision and Construction Procedures
1.2.2, **3.3**, 3.4, 3.12.10, 4.2.2, 4.2.7, 6.1.3, 6.2.4, 7.1.3, 7.3.4, 8.2, 8.3.1, 9.4.2, 10, 12, 14, 15.1.4
Suppliers
1.5, 3.12.1, 4.2.4, 4.2.6, 5.2.1, 9.3, 9.4.2, 9.5.4, 9.6, 9.10.5, 14.2.1
Surety
5.4.1.2, 9.6.8, 9.8.5, 9.10.2, 9.10.3, 11.1.2, 14.2.2, 15.2.7
Surety, Consent of
9.8.5, 9.10.2, 9.10.3
Surveys
1.1.7, 2.3.4
Suspension by the Owner for Convenience
14.3
Suspension of the Work
3.7.5, 5.4.2, 14.3
Suspension or Termination of the Contract
5.4.1.1, 14
Taxes
3.6, 3.8.2.1, 7.3.4.4
Termination by the Contractor
14.1, 15.1.7
Termination by the Owner for Cause
5.4.1.1, **14.2,** 15.1.7
Termination by the Owner for Convenience
14.4
Termination of the Architect
2.3.3
Termination of the Contractor Employment
14.2.2

TERMINATION OR SUSPENSION OF THE CONTRACT
14
Tests and Inspections
3.1.3, 3.3.3, 3.7.1, 4.2.2, 4.2.6, 4.2.9, 9.4.2, 9.8.3, 9.9.2, 9.10.1, 10.3.2, 12.2.1, **13.4**
TIME
8
Time, Delays and Extensions of
3.2.4, 3.7.4, 5.2.3, 7.2.1, 7.3.1, 7.4, **8.3**, 9.5.1, 9.7, 10.3.2, 10.4, 14.3.2, 15.1.6, 15.2.5
Time Limits
2.1.2, 2.2, 2.5, 3.2.2, 3.10, 3.11, 3.12.5, 3.15.1, 4.2, 5.2, 5.3, 5.4, 6.2.4, 7.3, 7.4, 8.2, 9.2, 9.3.1, 9.3.3, 9.4.1, 9.5, 9.6, 9.7, 9.8, 9.9, 9.10, 12.2, 13.4, 14, 15.1.2, 15.1.3, 15.4
Time Limits on Claims
3.7.4, 10.2.8, 15.1.2, 15.1.3
Title to Work
9.3.2, 9.3.3
UNCOVERING AND CORRECTION OF WORK
12
Uncovering of Work
12.1
Unforeseen Conditions, Concealed or Unknown
3.7.4, 8.3.1, 10.3
Unit Prices
7.3.3.2, 9.1.2
Use of Documents
1.1.1, 1.5, 2.3.6, 3.12.6, 5.3
Use of Site
3.13, 6.1.1, 6.2.1
Values, Schedule of
9.2, 9.3.1
Waiver of Claims by the Architect
13.3.2
Waiver of Claims by the Contractor
9.10.5, 13.3.2, **15.1.7**
Waiver of Claims by the Owner
9.9.3, 9.10.3, 9.10.4, 12.2.2.1, 13.3.2, 14.2.4, **15.1.7**
Waiver of Consequential Damages
14.2.4, 15.1.7
Waiver of Liens
9.3, 9.10.2, 9.10.4
Waivers of Subrogation
6.1.1, **11.3**
Warranty
3.5, 4.2.9, 9.3.3, 9.8.4, 9.9.1, 9.10.2, 9.10.4, 12.2.2, 15.1.2
Weather Delays
8.3, 15.1.6.2
Work, Definition of
1.1.3
Written Consent
1.5.2, 3.4.2, 3.7.4, 3.12.8, 3.14.2, 4.1.2, 9.3.2, 9.10.3, 13.2, 13.3.2, 15.4.4.2
Written Interpretations
4.2.11, 4.2.12
Written Orders
1.1.1, 2.4, 3.9, 7, 8.2.2, 12.1, 12.2, 13.4.2, 14.3.1

AIA Document A201® – 2017. Copyright © 1911, 1915, 1918, 1925, 1937, 1951, 1958, 1961, 1963, 1966, 1970, 1976, 1987, 1997, 2007 and 2017 by The American Institute of Architects. All rights reserved. The "American Institute of Architects," "AIA," the AIA Logo, "A201," and "AIA Contract Documents" are registered trademarks and may not be used without permission. This document was produced by AIA software at 12:13:54 ET on 05/05/2021 under Order No.4897197182 which expires on 06/18/2021, is not for resale, is licensed for one-time use only, and may only be used in accordance with the AIA Contract Documents® Terms of Service. To report copyright violations, e-mail copyright@aia.org.
User Notes: (1416637268)

ARTICLE 1 GENERAL PROVISIONS

§ 1.1 Basic Definitions

§ 1.1.1 The Contract Documents

The Contract Documents are enumerated in the Agreement between the Owner and Contractor (hereinafter the Agreement) and consist of the Agreement, Conditions of the Contract (General, Supplementary and other Conditions), Drawings, Specifications, Addenda issued prior to execution of the Contract, other documents listed in the Agreement, and Modifications issued after execution of the Contract. A Modification is (1) a written amendment to the Contract signed by both parties, (2) a Change Order, (3) a Construction Change Directive, or (4) a written order for a minor change in the Work issued by the Architect. Unless specifically enumerated in the Agreement, the Contract Documents do not include the advertisement or invitation to bid, Instructions to Bidders, sample forms, other information furnished by the Owner in anticipation of receiving bids or proposals, the Contractor's bid or proposal, or portions of Addenda relating to bidding or proposal requirements.

§ 1.1.2 The Contract

The Contract Documents form the Contract for Construction. The Contract represents the entire and integrated agreement between the parties hereto and supersedes prior negotiations, representations, or agreements, either written or oral. The Contract may be amended or modified only by a Modification. The Contract Documents shall not be construed to create a contractual relationship of any kind (1) between the Contractor and the Architect or the Architect's consultants, (2) between the Owner and a Subcontractor or a Sub-subcontractor, (3) between the Owner and the Architect or the Architect's consultants, or (4) between any persons or entities other than the Owner and the Contractor. The Architect shall, however, be entitled to performance and enforcement of obligations under the Contract intended to facilitate performance of the Architect's duties.

§ 1.1.3 The Work

The term "Work" means the construction and services required by the Contract Documents, whether completed or partially completed, and includes all other labor, materials, equipment, and services provided or to be provided by the Contractor to fulfill the Contractor's obligations. The Work may constitute the whole or a part of the Project.

§ 1.1.4 The Project

The Project is the total construction of which the Work performed under the Contract Documents may be the whole or a part and which may include construction by the Owner and by Separate Contractors.

§ 1.1.5 The Drawings

The Drawings are the graphic and pictorial portions of the Contract Documents showing the design, location and dimensions of the Work, generally including plans, elevations, sections, details, schedules, and diagrams.

§ 1.1.6 The Specifications

The Specifications are that portion of the Contract Documents consisting of the written requirements for materials, equipment, systems, standards and workmanship for the Work, and performance of related services.

§ 1.1.7 Instruments of Service

Instruments of Service are representations, in any medium of expression now known or later developed, of the tangible and intangible creative work performed by the Architect and the Architect's consultants under their respective professional services agreements. Instruments of Service may include, without limitation, studies, surveys, models, sketches, drawings, specifications, and other similar materials.

§ 1.1.8 Initial Decision Maker

The Initial Decision Maker is the person identified in the Agreement to render initial decisions on Claims in accordance with Section 15.2. The Initial Decision Maker shall not show partiality to the Owner or Contractor and shall not be liable for results of interpretations or decisions rendered in good faith.

§ 1.2 Correlation and Intent of the Contract Documents

§ 1.2.1 The intent of the Contract Documents is to include all items necessary for the proper execution and completion of the Work by the Contractor. The Contract Documents are complementary, and what is required by one shall be as binding as if required by all; performance by the Contractor shall be required only to the extent consistent with the Contract Documents and reasonably inferable from them as being necessary to produce the indicated results.

AIA Document A201® – 2017. Copyright © 1911, 1915, 1918, 1925, 1937, 1951, 1958, 1961, 1963, 1966, 1970, 1976, 1987, 1997, 2007 and 2017 by The American Institute of Architects. All rights reserved. The "American Institute of Architects," "AIA," the AIA Logo, "A201," and "AIA Contract Documents" are registered trademarks and may not be used without permission. This document was produced by AIA software at 12:13:54 ET on 05/05/2021 under Order No.4897197182 which expires on 06/18/2021, is not for resale, is licensed for one-time use only, and may only be used in accordance with the AIA Contract Documents® Terms of Service. To report copyright violations, e-mail copyright@aia.org.
User Notes: (1416637268)

§ 1.2.1.1 The invalidity of any provision of the Contract Documents shall not invalidate the Contract or its remaining provisions. If it is determined that any provision of the Contract Documents violates any law, or is otherwise invalid or unenforceable, then that provision shall be revised to the extent necessary to make that provision legal and enforceable. In such case the Contract Documents shall be construed, to the fullest extent permitted by law, to give effect to the parties' intentions and purposes in executing the Contract.

§ 1.2.2 Organization of the Specifications into divisions, sections and articles, and arrangement of Drawings shall not control the Contractor in dividing the Work among Subcontractors or in establishing the extent of Work to be performed by any trade.

§ 1.2.3 Unless otherwise stated in the Contract Documents, words that have well-known technical or construction industry meanings are used in the Contract Documents in accordance with such recognized meanings.

§ 1.3 Capitalization

Terms capitalized in these General Conditions include those that are (1) specifically defined, (2) the titles of numbered articles, or (3) the titles of other documents published by the American Institute of Architects.

§ 1.4 Interpretation

In the interest of brevity the Contract Documents frequently omit modifying words such as "all" and "any" and articles such as "the" and "an," but the fact that a modifier or an article is absent from one statement and appears in another is not intended to affect the interpretation of either statement.

§ 1.5 Ownership and Use of Drawings, Specifications, and Other Instruments of Service

§ 1.5.1 The Architect and the Architect's consultants shall be deemed the authors and owners of their respective Instruments of Service, including the Drawings and Specifications, and retain all common law, statutory, and other reserved rights in their Instruments of Service, including copyrights. The Contractor, Subcontractors, Sub-subcontractors, and suppliers shall not own or claim a copyright in the Instruments of Service. Submittal or distribution to meet official regulatory requirements or for other purposes in connection with the Project is not to be construed as publication in derogation of the Architect's or Architect's consultants' reserved rights.

§ 1.5.2 The Contractor, Subcontractors, Sub-subcontractors, and suppliers are authorized to use and reproduce the Instruments of Service provided to them, subject to any protocols established pursuant to Sections 1.7 and 1.8, solely and exclusively for execution of the Work. All copies made under this authorization shall bear the copyright notice, if any, shown on the Instruments of Service. The Contractor, Subcontractors, Sub-subcontractors, and suppliers may not use the Instruments of Service on other projects or for additions to the Project outside the scope of the Work without the specific written consent of the Owner, Architect, and the Architect's consultants.

§ 1.6 Notice

§ 1.6.1 Except as otherwise provided in Section 1.6.2, where the Contract Documents require one party to notify or give notice to the other party, such notice shall be provided in writing to the designated representative of the party to whom the notice is addressed and shall be deemed to have been duly served if delivered in person, by mail, by courier, or by electronic transmission if a method for electronic transmission is set forth in the Agreement.

§ 1.6.2 Notice of Claims as provided in Section 15.1.3 shall be provided in writing and shall be deemed to have been duly served only if delivered to the designated representative of the party to whom the notice is addressed by certified or registered mail, or by courier providing proof of delivery.

§ 1.7 Digital Data Use and Transmission

The parties shall agree upon protocols governing the transmission and use of Instruments of Service or any other information or documentation in digital form. The parties will use AIA Document E203™–2013, Building Information Modeling and Digital Data Exhibit, to establish the protocols for the development, use, transmission, and exchange of digital data.

§ 1.8 Building Information Models Use and Reliance

Any use of, or reliance on, all or a portion of a building information model without agreement to protocols governing the use of, and reliance on, the information contained in the model and without having those protocols set forth in AIA Document E203™–2013, Building Information Modeling and Digital Data Exhibit, and the requisite AIA Document

AIA Document A201® – 2017. Copyright © 1911, 1915, 1918, 1925, 1937, 1951, 1958, 1961, 1963, 1966, 1970, 1976, 1987, 1997, 2007 and 2017 by The American Institute of Architects. All rights reserved. The "American Institute of Architects," "AIA," the AIA Logo, "A201," and "AIA Contract Documents" are registered trademarks and may not be used without permission. This document was produced by AIA software at 12:13:54 ET on 05/05/2021 under Order No.4897197182 which expires on 06/18/2021, is not for resale, is licensed for one-time use only, and may only be used in accordance with the AIA Contract Documents® Terms of Service. To report copyright violations, e-mail copyright@aia.org.
User Notes: (1416637268)

G202™–2013, Project Building Information Modeling Protocol Form, shall be at the using or relying party's sole risk and without liability to the other party and its contractors or consultants, the authors of, or contributors to, the building information model, and each of their agents and employees.

ARTICLE 2 OWNER

§ 2.1 General

§ 2.1.1 The Owner is the person or entity identified as such in the Agreement and is referred to throughout the Contract Documents as if singular in number. The Owner shall designate in writing a representative who shall have express authority to bind the Owner with respect to all matters requiring the Owner's approval or authorization. Except as otherwise provided in Section 4.2.1, the Architect does not have such authority. The term "Owner" means the Owner or the Owner's authorized representative.

§ 2.1.2 The Owner shall furnish to the Contractor, within fifteen days after receipt of a written request, information necessary and relevant for the Contractor to evaluate, give notice of, or enforce mechanic's lien rights. Such information shall include a correct statement of the record legal title to the property on which the Project is located, usually referred to as the site, and the Owner's interest therein.

§ 2.2 Evidence of the Owner's Financial Arrangements

§ 2.2.1 Prior to commencement of the Work and upon written request by the Contractor, the Owner shall furnish to the Contractor reasonable evidence that the Owner has made financial arrangements to fulfill the Owner's obligations under the Contract. The Contractor shall have no obligation to commence the Work until the Owner provides such evidence. If commencement of the Work is delayed under this Section 2.2.1, the Contract Time shall be extended appropriately.

§ 2.2.2 Following commencement of the Work and upon written request by the Contractor, the Owner shall furnish to the Contractor reasonable evidence that the Owner has made financial arrangements to fulfill the Owner's obligations under the Contract only if (1) the Owner fails to make payments to the Contractor as the Contract Documents require; (2) the Contractor identifies in writing a reasonable concern regarding the Owner's ability to make payment when due; or (3) a change in the Work materially changes the Contract Sum. If the Owner fails to provide such evidence, as required, within fourteen days of the Contractor's request, the Contractor may immediately stop the Work and, in that event, shall notify the Owner that the Work has stopped. However, if the request is made because a change in the Work materially changes the Contract Sum under (3) above, the Contractor may immediately stop only that portion of the Work affected by the change until reasonable evidence is provided. If the Work is stopped under this Section 2.2.2, the Contract Time shall be extended appropriately and the Contract Sum shall be increased by the amount of the Contractor's reasonable costs of shutdown, delay and start-up, plus interest as provided in the Contract Documents.

§ 2.2.3 After the Owner furnishes evidence of financial arrangements under this Section 2.2, the Owner shall not materially vary such financial arrangements without prior notice to the Contractor.

§ 2.2.4 Where the Owner has designated information furnished under this Section 2.2 as "confidential," the Contractor shall keep the information confidential and shall not disclose it to any other person. However, the Contractor may disclose "confidential" information, after seven (7) days' notice to the Owner, where disclosure is required by law, including a subpoena or other form of compulsory legal process issued by a court or governmental entity, or by court or arbitrator(s) order. The Contractor may also disclose "confidential" information to its employees, consultants, sureties, Subcontractors and their employees, Sub-subcontractors, and others who need to know the content of such information solely and exclusively for the Project and who agree to maintain the confidentiality of such information.

§ 2.3 Information and Services Required of the Owner

§ 2.3.1 Except for permits and fees that are the responsibility of the Contractor under the Contract Documents, including those required under Section 3.7.1, the Owner shall secure and pay for necessary approvals, easements, assessments and charges required for construction, use or occupancy of permanent structures or for permanent changes in existing facilities.

§ 2.3.2 The Owner shall retain an architect lawfully licensed to practice architecture, or an entity lawfully practicing architecture, in the jurisdiction where the Project is located. That person or entity is identified as the Architect in the Agreement and is referred to throughout the Contract Documents as if singular in number.

AIA Document A201® – 2017. Copyright © 1911, 1915, 1918, 1925, 1937, 1951, 1958, 1961, 1963, 1966, 1970, 1976, 1987, 1997, 2007 and 2017 by The American Institute of Architects. All rights reserved. The "American Institute of Architects," "AIA," the AIA Logo, "A201," and "AIA Contract Documents" are registered trademarks and may not be used without permission. This document was produced by AIA software at 12:13:54 ET on 05/05/2021 under Order No.4897197182 which expires on 06/18/2021, is not for resale, is licensed for one-time use only, and may only be used in accordance with the AIA Contract Documents® Terms of Service. To report copyright violations, e-mail copyright@aia.org.
User Notes: (1416637268)

§ 2.3.3 If the employment of the Architect terminates, the Owner shall employ a successor to whom the Contractor has no reasonable objection and whose status under the Contract Documents shall be that of the Architect.

§ 2.3.4 The Owner shall furnish surveys describing physical characteristics, legal limitations and utility locations for the site of the Project, and a legal description of the site. The Contractor shall be entitled to rely on the accuracy of information furnished by the Owner but shall exercise proper precautions relating to the safe performance of the Work.

§ 2.3.5 The Owner shall furnish information or services required of the Owner by the Contract Documents with reasonable promptness. The Owner shall also furnish any other information or services under the Owner's control and relevant to the Contractor's performance of the Work with reasonable promptness after receiving the Contractor's written request for such information or services.

§ 2.3.6 Unless otherwise provided in the Contract Documents, the Owner shall furnish to the Contractor one copy of the Contract Documents for purposes of making reproductions pursuant to Section 1.5.2.

§ 2.4 Owner's Right to Stop the Work

If the Contractor fails to correct Work that is not in accordance with the requirements of the Contract Documents as required by Section 12.2 or repeatedly fails to carry out Work in accordance with the Contract Documents, the Owner may issue a written order to the Contractor to stop the Work, or any portion thereof, until the cause for such order has been eliminated; however, the right of the Owner to stop the Work shall not give rise to a duty on the part of the Owner to exercise this right for the benefit of the Contractor or any other person or entity, except to the extent required by Section 6.1.3.

§ 2.5 Owner's Right to Carry Out the Work

If the Contractor defaults or neglects to carry out the Work in accordance with the Contract Documents and fails within a ten-day period after receipt of notice from the Owner to commence and continue correction of such default or neglect with diligence and promptness, the Owner may, without prejudice to other remedies the Owner may have, correct such default or neglect. Such action by the Owner and amounts charged to the Contractor are both subject to prior approval of the Architect and the Architect may, pursuant to Section 9.5.1, withhold or nullify a Certificate for Payment in whole or in part, to the extent reasonably necessary to reimburse the Owner for the reasonable cost of correcting such deficiencies, including Owner's expenses and compensation for the Architect's additional services made necessary by such default, neglect, or failure. If current and future payments are not sufficient to cover such amounts, the Contractor shall pay the difference to the Owner. If the Contractor disagrees with the actions of the Owner or the Architect, or the amounts claimed as costs to the Owner, the Contractor may file a Claim pursuant to Article 15.

ARTICLE 3 CONTRACTOR

§ 3.1 General

§ 3.1.1 The Contractor is the person or entity identified as such in the Agreement and is referred to throughout the Contract Documents as if singular in number. The Contractor shall be lawfully licensed, if required in the jurisdiction where the Project is located. The Contractor shall designate in writing a representative who shall have express authority to bind the Contractor with respect to all matters under this Contract. The term "Contractor" means the Contractor or the Contractor's authorized representative.

§ 3.1.2 The Contractor shall perform the Work in accordance with the Contract Documents.

§ 3.1.3 The Contractor shall not be relieved of its obligations to perform the Work in accordance with the Contract Documents either by activities or duties of the Architect in the Architect's administration of the Contract, or by tests, inspections or approvals required or performed by persons or entities other than the Contractor.

§ 3.2 Review of Contract Documents and Field Conditions by Contractor

§ 3.2.1 Execution of the Contract by the Contractor is a representation that the Contractor has visited the site, become generally familiar with local conditions under which the Work is to be performed, and correlated personal observations with requirements of the Contract Documents.

AIA Document A201® – 2017. Copyright © 1911, 1915, 1918, 1925, 1937, 1951, 1958, 1961, 1963, 1966, 1970, 1976, 1987, 1997, 2007 and 2017 by The American Institute of Architects. All rights reserved. The "American Institute of Architects," "AIA," the AIA Logo, "A201," and "AIA Contract Documents" are registered trademarks and may not be used without permission. This document was produced by AIA software at 12:13:54 ET on 05/05/2021 under Order No.4897197182 which expires on 06/18/2021, is not for resale, is licensed for one-time use only, and may only be used in accordance with the AIA Contract Documents® Terms of Service. To report copyright violations, e-mail copyright@aia.org.
User Notes: (1416637268)

§ 3.2.2 Because the Contract Documents are complementary, the Contractor shall, before starting each portion of the Work, carefully study and compare the various Contract Documents relative to that portion of the Work, as well as the information furnished by the Owner pursuant to Section 2.3.4, shall take field measurements of any existing conditions related to that portion of the Work, and shall observe any conditions at the site affecting it. These obligations are for the purpose of facilitating coordination and construction by the Contractor and are not for the purpose of discovering errors, omissions, or inconsistencies in the Contract Documents; however, the Contractor shall promptly report to the Architect any errors, inconsistencies or omissions discovered by or made known to the Contractor as a request for information in such form as the Architect may require. It is recognized that the Contractor's review is made in the Contractor's capacity as a contractor and not as a licensed design professional, unless otherwise specifically provided in the Contract Documents.

§ 3.2.3 The Contractor is not required to ascertain that the Contract Documents are in accordance with applicable laws, statutes, ordinances, codes, rules and regulations, or lawful orders of public authorities, but the Contractor shall promptly report to the Architect any nonconformity discovered by or made known to the Contractor as a request for information in such form as the Architect may require.

§ 3.2.4 If the Contractor believes that additional cost or time is involved because of clarifications or instructions the Architect issues in response to the Contractor's notices or requests for information pursuant to Sections 3.2.2 or 3.2.3, the Contractor shall submit Claims as provided in Article 15. If the Contractor fails to perform the obligations of Sections 3.2.2 or 3.2.3, the Contractor shall pay such costs and damages to the Owner, subject to Section 15.1.7, as would have been avoided if the Contractor had performed such obligations. If the Contractor performs those obligations, the Contractor shall not be liable to the Owner or Architect for damages resulting from errors, inconsistencies or omissions in the Contract Documents, for differences between field measurements or conditions and the Contract Documents, or for nonconformities of the Contract Documents to applicable laws, statutes, ordinances, codes, rules and regulations, and lawful orders of public authorities.

§ 3.3 Supervision and Construction Procedures

§ 3.3.1 The Contractor shall supervise and direct the Work, using the Contractor's best skill and attention. The Contractor shall be solely responsible for, and have control over, construction means, methods, techniques, sequences, and procedures, and for coordinating all portions of the Work under the Contract. If the Contract Documents give specific instructions concerning construction means, methods, techniques, sequences, or procedures, the Contractor shall evaluate the jobsite safety thereof and shall be solely responsible for the jobsite safety of such means, methods, techniques, sequences, or procedures. If the Contractor determines that such means, methods, techniques, sequences or procedures may not be safe, the Contractor shall give timely notice to the Owner and Architect, and shall propose alternative means, methods, techniques, sequences, or procedures. The Architect shall evaluate the proposed alternative solely for conformance with the design intent for the completed construction. Unless the Architect objects to the Contractor's proposed alternative, the Contractor shall perform the Work using its alternative means, methods, techniques, sequences, or procedures.

§ 3.3.2 The Contractor shall be responsible to the Owner for acts and omissions of the Contractor's employees, Subcontractors and their agents and employees, and other persons or entities performing portions of the Work for, or on behalf of, the Contractor or any of its Subcontractors.

§ 3.3.3 The Contractor shall be responsible for inspection of portions of Work already performed to determine that such portions are in proper condition to receive subsequent Work.

§ 3.4 Labor and Materials

§ 3.4.1 Unless otherwise provided in the Contract Documents, the Contractor shall provide and pay for labor, materials, equipment, tools, construction equipment and machinery, water, heat, utilities, transportation, and other facilities and services necessary for proper execution and completion of the Work, whether temporary or permanent and whether or not incorporated or to be incorporated in the Work.

§ 3.4.2 Except in the case of minor changes in the Work approved by the Architect in accordance with Section 3.12.8 or ordered by the Architect in accordance with Section 7.4, the Contractor may make substitutions only with the consent of the Owner, after evaluation by the Architect and in accordance with a Change Order or Construction Change Directive.

AIA Document A201® – 2017. Copyright © 1911, 1915, 1918, 1925, 1937, 1951, 1958, 1961, 1963, 1966, 1970, 1976, 1987, 1997, 2007 and 2017 by The American Institute of Architects. All rights reserved. The "American Institute of Architects," "AIA," the AIA Logo, "A201," and "AIA Contract Documents" are registered trademarks and may not be used without permission. This document was produced by AIA software at 12:13:54 ET on 05/05/2021 under Order No.4897197182 which expires on 06/18/2021, is not for resale, is licensed for one-time use only, and may only be used in accordance with the AIA Contract Documents® Terms of Service. To report copyright violations, e-mail copyright@aia.org.
User Notes: (1416637268)

§ 3.4.3 The Contractor shall enforce strict discipline and good order among the Contractor's employees and other persons carrying out the Work. The Contractor shall not permit employment of unfit persons or persons not properly skilled in tasks assigned to them.

§ 3.5 Warranty

§ 3.5.1 The Contractor warrants to the Owner and Architect that materials and equipment furnished under the Contract will be of good quality and new unless the Contract Documents require or permit otherwise. The Contractor further warrants that the Work will conform to the requirements of the Contract Documents and will be free from defects, except for those inherent in the quality of the Work the Contract Documents require or permit. Work, materials, or equipment not conforming to these requirements may be considered defective. The Contractor's warranty excludes remedy for damage or defect caused by abuse, alterations to the Work not executed by the Contractor, improper or insufficient maintenance, improper operation, or normal wear and tear and normal usage. If required by the Architect, the Contractor shall furnish satisfactory evidence as to the kind and quality of materials and equipment.

§ 3.5.2 All material, equipment, or other special warranties required by the Contract Documents shall be issued in the name of the Owner, or shall be transferable to the Owner, and shall commence in accordance with Section 9.8.4.

§ 3.6 Taxes

The Contractor shall pay sales, consumer, use and similar taxes for the Work provided by the Contractor that are legally enacted when bids are received or negotiations concluded, whether or not yet effective or merely scheduled to go into effect.

§ 3.7 Permits, Fees, Notices and Compliance with Laws

§ 3.7.1 Unless otherwise provided in the Contract Documents, the Contractor shall secure and pay for the building permit as well as for other permits, fees, licenses, and inspections by government agencies necessary for proper execution and completion of the Work that are customarily secured after execution of the Contract and legally required at the time bids are received or negotiations concluded.

§ 3.7.2 The Contractor shall comply with and give notices required by applicable laws, statutes, ordinances, codes, rules and regulations, and lawful orders of public authorities applicable to performance of the Work.

§ 3.7.3 If the Contractor performs Work knowing it to be contrary to applicable laws, statutes, ordinances, codes, rules and regulations, or lawful orders of public authorities, the Contractor shall assume appropriate responsibility for such Work and shall bear the costs attributable to correction.

§ 3.7.4 Concealed or Unknown Conditions

If the Contractor encounters conditions at the site that are (1) subsurface or otherwise concealed physical conditions that differ materially from those indicated in the Contract Documents or (2) unknown physical conditions of an unusual nature that differ materially from those ordinarily found to exist and generally recognized as inherent in construction activities of the character provided for in the Contract Documents, the Contractor shall promptly provide notice to the Owner and the Architect before conditions are disturbed and in no event later than 14 days after first observance of the conditions. The Architect will promptly investigate such conditions and, if the Architect determines that they differ materially and cause an increase or decrease in the Contractor's cost of, or time required for, performance of any part of the Work, will recommend that an equitable adjustment be made in the Contract Sum or Contract Time, or both. If the Architect determines that the conditions at the site are not materially different from those indicated in the Contract Documents and that no change in the terms of the Contract is justified, the Architect shall promptly notify the Owner and Contractor, stating the reasons. If either party disputes the Architect's determination or recommendation, that party may submit a Claim as provided in Article 15.

§ 3.7.5 If, in the course of the Work, the Contractor encounters human remains or recognizes the existence of burial markers, archaeological sites or wetlands not indicated in the Contract Documents, the Contractor shall immediately suspend any operations that would affect them and shall notify the Owner and Architect. Upon receipt of such notice, the Owner shall promptly take any action necessary to obtain governmental authorization required to resume the operations. The Contractor shall continue to suspend such operations until otherwise instructed by the Owner but shall continue with all other operations that do not affect those remains or features. Requests for adjustments in the Contract Sum and Contract Time arising from the existence of such remains or features may be made as provided in Article 15.

AIA Document A201® – 2017. Copyright © 1911, 1915, 1918, 1925, 1937, 1951, 1958, 1961, 1963, 1966, 1970, 1976, 1987, 1997, 2007 and 2017 by The American Institute of Architects. All rights reserved. The "American Institute of Architects," "AIA," the AIA Logo, "A201," and "AIA Contract Documents" are registered trademarks and may not be used without permission. This document was produced by AIA software at 12:13:54 ET on 05/05/2021 under Order No.4897197182 which expires on 06/18/2021, is not for resale, is licensed for one-time use only, and may only be used in accordance with the AIA Contract Documents® Terms of Service. To report copyright violations, e-mail copyright@aia.org.
User Notes: (1416637268)

§ 3.8 Allowances

§ 3.8.1 The Contractor shall include in the Contract Sum all allowances stated in the Contract Documents. Items covered by allowances shall be supplied for such amounts and by such persons or entities as the Owner may direct, but the Contractor shall not be required to employ persons or entities to whom the Contractor has reasonable objection.

§ 3.8.2 Unless otherwise provided in the Contract Documents,

- **.1** allowances shall cover the cost to the Contractor of materials and equipment delivered at the site and all required taxes, less applicable trade discounts;
- **.2** Contractor's costs for unloading and handling at the site, labor, installation costs, overhead, profit, and other expenses contemplated for stated allowance amounts shall be included in the Contract Sum but not in the allowances; and
- **.3** whenever costs are more than or less than allowances, the Contract Sum shall be adjusted accordingly by Change Order. The amount of the Change Order shall reflect (1) the difference between actual costs and the allowances under Section 3.8.2.1 and (2) changes in Contractor's costs under Section 3.8.2.2.

§ 3.8.3 Materials and equipment under an allowance shall be selected by the Owner with reasonable promptness.

§ 3.9 Superintendent

§ 3.9.1 The Contractor shall employ a competent superintendent and necessary assistants who shall be in attendance at the Project site during performance of the Work. The superintendent shall represent the Contractor, and communications given to the superintendent shall be as binding as if given to the Contractor.

§ 3.9.2 The Contractor, as soon as practicable after award of the Contract, shall notify the Owner and Architect of the name and qualifications of a proposed superintendent. Within 14 days of receipt of the information, the Architect may notify the Contractor, stating whether the Owner or the Architect (1) has reasonable objection to the proposed superintendent or (2) requires additional time for review. Failure of the Architect to provide notice within the 14-day period shall constitute notice of no reasonable objection.

§ 3.9.3 The Contractor shall not employ a proposed superintendent to whom the Owner or Architect has made reasonable and timely objection. The Contractor shall not change the superintendent without the Owner's consent, which shall not unreasonably be withheld or delayed.

§ 3.10 Contractor's Construction and Submittal Schedules

§ 3.10.1 The Contractor, promptly after being awarded the Contract, shall submit for the Owner's and Architect's information a Contractor's construction schedule for the Work. The schedule shall contain detail appropriate for the Project, including (1) the date of commencement of the Work, interim schedule milestone dates, and the date of Substantial Completion; (2) an apportionment of the Work by construction activity; and (3) the time required for completion of each portion of the Work. The schedule shall provide for the orderly progression of the Work to completion and shall not exceed time limits current under the Contract Documents. The schedule shall be revised at appropriate intervals as required by the conditions of the Work and Project.

§ 3.10.2 The Contractor, promptly after being awarded the Contract and thereafter as necessary to maintain a current submittal schedule, shall submit a submittal schedule for the Architect's approval. The Architect's approval shall not be unreasonably delayed or withheld. The submittal schedule shall (1) be coordinated with the Contractor's construction schedule, and (2) allow the Architect reasonable time to review submittals. If the Contractor fails to submit a submittal schedule, or fails to provide submittals in accordance with the approved submittal schedule, the Contractor shall not be entitled to any increase in Contract Sum or extension of Contract Time based on the time required for review of submittals.

§ 3.10.3 The Contractor shall perform the Work in general accordance with the most recent schedules submitted to the Owner and Architect.

§ 3.11 Documents and Samples at the Site

The Contractor shall make available, at the Project site, the Contract Documents, including Change Orders, Construction Change Directives, and other Modifications, in good order and marked currently to indicate field changes and selections made during construction, and the approved Shop Drawings, Product Data, Samples, and similar required submittals. These shall be in electronic form or paper copy, available to the Architect and Owner, and

AIA Document A201® – 2017. Copyright © 1911, 1915, 1918, 1925, 1937, 1951, 1958, 1961, 1963, 1966, 1970, 1976, 1987, 1997, 2007 and 2017 by The American Institute of Architects. All rights reserved. The "American Institute of Architects," "AIA," the AIA Logo, "A201," and "AIA Contract Documents" are registered trademarks and may not be used without permission. This document was produced by AIA software at 12:13:54 ET on 05/05/2021 under Order No.4897197182 which expires on 06/18/2021, is not for resale, is licensed for one-time use only, and may only be used in accordance with the AIA Contract Documents® Terms of Service. To report copyright violations, e-mail copyright@aia.org.
User Notes: (1416637268)

delivered to the Architect for submittal to the Owner upon completion of the Work as a record of the Work as constructed.

§ 3.12 Shop Drawings, Product Data and Samples

§ 3.12.1 Shop Drawings are drawings, diagrams, schedules, and other data specially prepared for the Work by the Contractor or a Subcontractor, Sub-subcontractor, manufacturer, supplier, or distributor to illustrate some portion of the Work.

§ 3.12.2 Product Data are illustrations, standard schedules, performance charts, instructions, brochures, diagrams, and other information furnished by the Contractor to illustrate materials or equipment for some portion of the Work.

§ 3.12.3 Samples are physical examples that illustrate materials, equipment, or workmanship, and establish standards by which the Work will be judged.

§ 3.12.4 Shop Drawings, Product Data, Samples, and similar submittals are not Contract Documents. Their purpose is to demonstrate how the Contractor proposes to conform to the information given and the design concept expressed in the Contract Documents for those portions of the Work for which the Contract Documents require submittals. Review by the Architect is subject to the limitations of Section 4.2.7. Informational submittals upon which the Architect is not expected to take responsive action may be so identified in the Contract Documents. Submittals that are not required by the Contract Documents may be returned by the Architect without action.

§ 3.12.5 The Contractor shall review for compliance with the Contract Documents, approve, and submit to the Architect, Shop Drawings, Product Data, Samples, and similar submittals required by the Contract Documents, in accordance with the submittal schedule approved by the Architect or, in the absence of an approved submittal schedule, with reasonable promptness and in such sequence as to cause no delay in the Work or in the activities of the Owner or of Separate Contractors.

§ 3.12.6 By submitting Shop Drawings, Product Data, Samples, and similar submittals, the Contractor represents to the Owner and Architect that the Contractor has (1) reviewed and approved them, (2) determined and verified materials, field measurements and field construction criteria related thereto, or will do so, and (3) checked and coordinated the information contained within such submittals with the requirements of the Work and of the Contract Documents.

§ 3.12.7 The Contractor shall perform no portion of the Work for which the Contract Documents require submittal and review of Shop Drawings, Product Data, Samples, or similar submittals, until the respective submittal has been approved by the Architect.

§ 3.12.8 The Work shall be in accordance with approved submittals except that the Contractor shall not be relieved of responsibility for deviations from the requirements of the Contract Documents by the Architect's approval of Shop Drawings, Product Data, Samples, or similar submittals, unless the Contractor has specifically notified the Architect of such deviation at the time of submittal and (1) the Architect has given written approval to the specific deviation as a minor change in the Work, or (2) a Change Order or Construction Change Directive has been issued authorizing the deviation. The Contractor shall not be relieved of responsibility for errors or omissions in Shop Drawings, Product Data, Samples, or similar submittals, by the Architect's approval thereof.

§ 3.12.9 The Contractor shall direct specific attention, in writing or on resubmitted Shop Drawings, Product Data, Samples, or similar submittals, to revisions other than those requested by the Architect on previous submittals. In the absence of such notice, the Architect's approval of a resubmission shall not apply to such revisions.

§ 3.12.10 The Contractor shall not be required to provide professional services that constitute the practice of architecture or engineering unless such services are specifically required by the Contract Documents for a portion of the Work or unless the Contractor needs to provide such services in order to carry out the Contractor's responsibilities for construction means, methods, techniques, sequences, and procedures. The Contractor shall not be required to provide professional services in violation of applicable law.

§ 3.12.10.1 If professional design services or certifications by a design professional related to systems, materials, or equipment are specifically required of the Contractor by the Contract Documents, the Owner and the Architect will

AIA Document A201® – 2017. Copyright © 1911, 1915, 1918, 1925, 1937, 1951, 1958, 1961, 1963, 1966, 1970, 1976, 1987, 1997, 2007 and 2017 by The American Institute of Architects. All rights reserved. The "American Institute of Architects," "AIA," the AIA Logo, "A201," and "AIA Contract Documents" are registered trademarks and may not be used without permission. This document was produced by AIA software at 12:13:54 ET on 05/05/2021 under Order No.4897197182 which expires on 06/18/2021, is not for resale, is licensed for one-time use only, and may only be used in accordance with the AIA Contract Documents® Terms of Service. To report copyright violations, e-mail copyright@aia.org.
User Notes: (1416637268)

specify all performance and design criteria that such services must satisfy. The Contractor shall be entitled to rely upon the adequacy and accuracy of the performance and design criteria provided in the Contract Documents. The Contractor shall cause such services or certifications to be provided by an appropriately licensed design professional, whose signature and seal shall appear on all drawings, calculations, specifications, certifications, Shop Drawings, and other submittals prepared by such professional. Shop Drawings, and other submittals related to the Work, designed or certified by such professional, if prepared by others, shall bear such professional's written approval when submitted to the Architect. The Owner and the Architect shall be entitled to rely upon the adequacy and accuracy of the services, certifications, and approvals performed or provided by such design professionals, provided the Owner and Architect have specified to the Contractor the performance and design criteria that such services must satisfy. Pursuant to this Section 3.12.10, the Architect will review and approve or take other appropriate action on submittals only for the limited purpose of checking for conformance with information given and the design concept expressed in the Contract Documents.

§ 3.12.10.2 If the Contract Documents require the Contractor's design professional to certify that the Work has been performed in accordance with the design criteria, the Contractor shall furnish such certifications to the Architect at the time and in the form specified by the Architect.

§ 3.13 Use of Site

The Contractor shall confine operations at the site to areas permitted by applicable laws, statutes, ordinances, codes, rules and regulations, lawful orders of public authorities, and the Contract Documents and shall not unreasonably encumber the site with materials or equipment.

§ 3.14 Cutting and Patching

§ 3.14.1 The Contractor shall be responsible for cutting, fitting, or patching required to complete the Work or to make its parts fit together properly. All areas requiring cutting, fitting, or patching shall be restored to the condition existing prior to the cutting, fitting, or patching, unless otherwise required by the Contract Documents.

§ 3.14.2 The Contractor shall not damage or endanger a portion of the Work or fully or partially completed construction of the Owner or Separate Contractors by cutting, patching, or otherwise altering such construction, or by excavation. The Contractor shall not cut or otherwise alter construction by the Owner or a Separate Contractor except with written consent of the Owner and of the Separate Contractor. Consent shall not be unreasonably withheld. The Contractor shall not unreasonably withhold, from the Owner or a Separate Contractor, its consent to cutting or otherwise altering the Work.

§ 3.15 Cleaning Up

§ 3.15.1 The Contractor shall keep the premises and surrounding area free from accumulation of waste materials and rubbish caused by operations under the Contract. At completion of the Work, the Contractor shall remove waste materials, rubbish, the Contractor's tools, construction equipment, machinery, and surplus materials from and about the Project.

§ 3.15.2 If the Contractor fails to clean up as provided in the Contract Documents, the Owner may do so and the Owner shall be entitled to reimbursement from the Contractor.

§ 3.16 Access to Work

The Contractor shall provide the Owner and Architect with access to the Work in preparation and progress wherever located.

§ 3.17 Royalties, Patents and Copyrights

The Contractor shall pay all royalties and license fees. The Contractor shall defend suits or claims for infringement of copyrights and patent rights and shall hold the Owner and Architect harmless from loss on account thereof, but shall not be responsible for defense or loss when a particular design, process, or product of a particular manufacturer or manufacturers is required by the Contract Documents, or where the copyright violations are contained in Drawings, Specifications, or other documents prepared by the Owner or Architect. However, if an infringement of a copyright or patent is discovered by, or made known to, the Contractor, the Contractor shall be responsible for the loss unless the information is promptly furnished to the Architect.

AIA Document A201® – 2017. Copyright © 1911, 1915, 1918, 1925, 1937, 1951, 1958, 1961, 1963, 1966, 1970, 1976, 1987, 1997, 2007 and 2017 by The American Institute of Architects. All rights reserved. The "American Institute of Architects," "AIA," the AIA Logo, "A201," and "AIA Contract Documents" are registered trademarks and may not be used without permission. This document was produced by AIA software at 12:13:54 ET on 05/05/2021 under Order No.4897197182 which expires on 06/18/2021, is not for resale, is licensed for one-time use only, and may only be used in accordance with the AIA Contract Documents® Terms of Service. To report copyright violations, e-mail copyright@aia.org.
User Notes: (1416637268)

§ 3.18 Indemnification

§ 3.18.1 To the fullest extent permitted by law, the Contractor shall indemnify and hold harmless the Owner, Architect, Architect's consultants, and agents and employees of any of them from and against claims, damages, losses, and expenses, including but not limited to attorneys' fees, arising out of or resulting from performance of the Work, provided that such claim, damage, loss, or expense is attributable to bodily injury, sickness, disease or death, or to injury to or destruction of tangible property (other than the Work itself), but only to the extent caused by the negligent acts or omissions of the Contractor, a Subcontractor, anyone directly or indirectly employed by them, or anyone for whose acts they may be liable, regardless of whether or not such claim, damage, loss, or expense is caused in part by a party indemnified hereunder. Such obligation shall not be construed to negate, abridge, or reduce other rights or obligations of indemnity that would otherwise exist as to a party or person described in this Section 3.18.

§ 3.18.2 In claims against any person or entity indemnified under this Section 3.18 by an employee of the Contractor, a Subcontractor, anyone directly or indirectly employed by them, or anyone for whose acts they may be liable, the indemnification obligation under Section 3.18.1 shall not be limited by a limitation on amount or type of damages, compensation, or benefits payable by or for the Contractor or a Subcontractor under workers' compensation acts, disability benefit acts, or other employee benefit acts.

ARTICLE 4 ARCHITECT

§ 4.1 General

§ 4.1.1 The Architect is the person or entity retained by the Owner pursuant to Section 2.3.2 and identified as such in the Agreement.

§ 4.1.2 Duties, responsibilities, and limitations of authority of the Architect as set forth in the Contract Documents shall not be restricted, modified, or extended without written consent of the Owner, Contractor, and Architect. Consent shall not be unreasonably withheld.

§ 4.2 Administration of the Contract

§ 4.2.1 The Architect will provide administration of the Contract as described in the Contract Documents and will be an Owner's representative during construction until the date the Architect issues the final Certificate for Payment. The Architect will have authority to act on behalf of the Owner only to the extent provided in the Contract Documents.

§ 4.2.2 The Architect will visit the site at intervals appropriate to the stage of construction, or as otherwise agreed with the Owner, to become generally familiar with the progress and quality of the portion of the Work completed, and to determine in general if the Work observed is being performed in a manner indicating that the Work, when fully completed, will be in accordance with the Contract Documents. However, the Architect will not be required to make exhaustive or continuous on-site inspections to check the quality or quantity of the Work. The Architect will not have control over, charge of, or responsibility for the construction means, methods, techniques, sequences or procedures, or for the safety precautions and programs in connection with the Work, since these are solely the Contractor's rights and responsibilities under the Contract Documents.

§ 4.2.3 On the basis of the site visits, the Architect will keep the Owner reasonably informed about the progress and quality of the portion of the Work completed, and promptly report to the Owner (1) known deviations from the Contract Documents, (2) known deviations from the most recent construction schedule submitted by the Contractor, and (3) defects and deficiencies observed in the Work. The Architect will not be responsible for the Contractor's failure to perform the Work in accordance with the requirements of the Contract Documents. The Architect will not have control over or charge of, and will not be responsible for acts or omissions of, the Contractor, Subcontractors, or their agents or employees, or any other persons or entities performing portions of the Work.

§ 4.2.4 Communications

The Owner and Contractor shall include the Architect in all communications that relate to or affect the Architect's services or professional responsibilities. The Owner shall promptly notify the Architect of the substance of any direct communications between the Owner and the Contractor otherwise relating to the Project. Communications by and with the Architect's consultants shall be through the Architect. Communications by and with Subcontractors and suppliers shall be through the Contractor. Communications by and with Separate Contractors shall be through the Owner. The Contract Documents may specify other communication protocols.

AIA Document A201® – 2017. Copyright © 1911, 1915, 1918, 1925, 1937, 1951, 1958, 1961, 1963, 1966, 1970, 1976, 1987, 1997, 2007 and 2017 by The American Institute of Architects. All rights reserved. The "American Institute of Architects," "AIA," the AIA Logo, "A201," and "AIA Contract Documents" are registered trademarks and may not be used without permission. This document was produced by AIA software at 12:13:54 ET on 05/05/2021 under Order No.4897197182 which expires on 06/18/2021, is not for resale, is licensed for one-time use only, and may only be used in accordance with the AIA Contract Documents® Terms of Service. To report copyright violations, e-mail copyright@aia.org.
User Notes: (1416637268)

§ 4.2.5 Based on the Architect's evaluations of the Contractor's Applications for Payment, the Architect will review and certify the amounts due the Contractor and will issue Certificates for Payment in such amounts.

§ 4.2.6 The Architect has authority to reject Work that does not conform to the Contract Documents. Whenever the Architect considers it necessary or advisable, the Architect will have authority to require inspection or testing of the Work in accordance with Sections 13.4.2 and 13.4.3, whether or not the Work is fabricated, installed or completed. However, neither this authority of the Architect nor a decision made in good faith either to exercise or not to exercise such authority shall give rise to a duty or responsibility of the Architect to the Contractor, Subcontractors, suppliers, their agents or employees, or other persons or entities performing portions of the Work.

§ 4.2.7 The Architect will review and approve, or take other appropriate action upon, the Contractor's submittals such as Shop Drawings, Product Data, and Samples, but only for the limited purpose of checking for conformance with information given and the design concept expressed in the Contract Documents. The Architect's action will be taken in accordance with the submittal schedule approved by the Architect or, in the absence of an approved submittal schedule, with reasonable promptness while allowing sufficient time in the Architect's professional judgment to permit adequate review. Review of such submittals is not conducted for the purpose of determining the accuracy and completeness of other details such as dimensions and quantities, or for substantiating instructions for installation or performance of equipment or systems, all of which remain the responsibility of the Contractor as required by the Contract Documents. The Architect's review of the Contractor's submittals shall not relieve the Contractor of the obligations under Sections 3.3, 3.5, and 3.12. The Architect's review shall not constitute approval of safety precautions or of any construction means, methods, techniques, sequences, or procedures. The Architect's approval of a specific item shall not indicate approval of an assembly of which the item is a component.

§ 4.2.8 The Architect will prepare Change Orders and Construction Change Directives, and may order minor changes in the Work as provided in Section 7.4. The Architect will investigate and make determinations and recommendations regarding concealed and unknown conditions as provided in Section 3.7.4.

§ 4.2.9 The Architect will conduct inspections to determine the date or dates of Substantial Completion and the date of final completion; issue Certificates of Substantial Completion pursuant to Section 9.8; receive and forward to the Owner, for the Owner's review and records, written warranties and related documents required by the Contract and assembled by the Contractor pursuant to Section 9.10; and issue a final Certificate for Payment pursuant to Section 9.10.

§ 4.2.10 If the Owner and Architect agree, the Architect will provide one or more Project representatives to assist in carrying out the Architect's responsibilities at the site. The Owner shall notify the Contractor of any change in the duties, responsibilities and limitations of authority of the Project representatives.

§ 4.2.11 The Architect will interpret and decide matters concerning performance under, and requirements of, the Contract Documents on written request of either the Owner or Contractor. The Architect's response to such requests will be made in writing within any time limits agreed upon or otherwise with reasonable promptness.

§ 4.2.12 Interpretations and decisions of the Architect will be consistent with the intent of, and reasonably inferable from, the Contract Documents and will be in writing or in the form of drawings. When making such interpretations and decisions, the Architect will endeavor to secure faithful performance by both Owner and Contractor, will not show partiality to either, and will not be liable for results of interpretations or decisions rendered in good faith.

§ 4.2.13 The Architect's decisions on matters relating to aesthetic effect will be final if consistent with the intent expressed in the Contract Documents.

§ 4.2.14 The Architect will review and respond to requests for information about the Contract Documents. The Architect's response to such requests will be made in writing within any time limits agreed upon or otherwise with reasonable promptness. If appropriate, the Architect will prepare and issue supplemental Drawings and Specifications in response to the requests for information.

AIA Document A201® – 2017. Copyright © 1911, 1915, 1918, 1925, 1937, 1951, 1958, 1961, 1963, 1966, 1970, 1976, 1987, 1997, 2007 and 2017 by The American Institute of Architects. All rights reserved. The "American Institute of Architects," "AIA," the AIA Logo, "A201," and "AIA Contract Documents" are registered trademarks and may not be used without permission. This document was produced by AIA software at 12:13:54 ET on 05/05/2021 under Order No.4897197182 which expires on 06/18/2021, is not for resale, is licensed for one-time use only, and may only be used in accordance with the AIA Contract Documents® Terms of Service. To report copyright violations, e-mail copyright@aia.org.
User Notes: (1416637268)

ARTICLE 5 SUBCONTRACTORS

§ 5.1 Definitions

§ 5.1.1 A Subcontractor is a person or entity who has a direct contract with the Contractor to perform a portion of the Work at the site. The term "Subcontractor" is referred to throughout the Contract Documents as if singular in number and means a Subcontractor or an authorized representative of the Subcontractor. The term "Subcontractor" does not include a Separate Contractor or the subcontractors of a Separate Contractor.

§ 5.1.2 A Sub-subcontractor is a person or entity who has a direct or indirect contract with a Subcontractor to perform a portion of the Work at the site. The term "Sub-subcontractor" is referred to throughout the Contract Documents as if singular in number and means a Sub-subcontractor or an authorized representative of the Sub-subcontractor.

§ 5.2 Award of Subcontracts and Other Contracts for Portions of the Work

§ 5.2.1 Unless otherwise stated in the Contract Documents, the Contractor, as soon as practicable after award of the Contract, shall notify the Owner and Architect of the persons or entities proposed for each principal portion of the Work, including those who are to furnish materials or equipment fabricated to a special design. Within 14 days of receipt of the information, the Architect may notify the Contractor whether the Owner or the Architect (1) has reasonable objection to any such proposed person or entity or (2) requires additional time for review. Failure of the Architect to provide notice within the 14-day period shall constitute notice of no reasonable objection.

§ 5.2.2 The Contractor shall not contract with a proposed person or entity to whom the Owner or Architect has made reasonable and timely objection. The Contractor shall not be required to contract with anyone to whom the Contractor has made reasonable objection.

§ 5.2.3 If the Owner or Architect has reasonable objection to a person or entity proposed by the Contractor, the Contractor shall propose another to whom the Owner or Architect has no reasonable objection. If the proposed but rejected Subcontractor was reasonably capable of performing the Work, the Contract Sum and Contract Time shall be increased or decreased by the difference, if any, occasioned by such change, and an appropriate Change Order shall be issued before commencement of the substitute Subcontractor's Work. However, no increase in the Contract Sum or Contract Time shall be allowed for such change unless the Contractor has acted promptly and responsively in submitting names as required.

§ 5.2.4 The Contractor shall not substitute a Subcontractor, person, or entity for one previously selected if the Owner or Architect makes reasonable objection to such substitution.

§ 5.3 Subcontractual Relations

By appropriate written agreement, the Contractor shall require each Subcontractor, to the extent of the Work to be performed by the Subcontractor, to be bound to the Contractor by terms of the Contract Documents, and to assume toward the Contractor all the obligations and responsibilities, including the responsibility for safety of the Subcontractor's Work that the Contractor, by these Contract Documents, assumes toward the Owner and Architect. Each subcontract agreement shall preserve and protect the rights of the Owner and Architect under the Contract Documents with respect to the Work to be performed by the Subcontractor so that subcontracting thereof will not prejudice such rights, and shall allow to the Subcontractor, unless specifically provided otherwise in the subcontract agreement, the benefit of all rights, remedies, and redress against the Contractor that the Contractor, by the Contract Documents, has against the Owner. Where appropriate, the Contractor shall require each Subcontractor to enter into similar agreements with Sub-subcontractors. The Contractor shall make available to each proposed Subcontractor, prior to the execution of the subcontract agreement, copies of the Contract Documents to which the Subcontractor will be bound, and, upon written request of the Subcontractor, identify to the Subcontractor terms and conditions of the proposed subcontract agreement that may be at variance with the Contract Documents. Subcontractors will similarly make copies of applicable portions of such documents available to their respective proposed Sub-subcontractors.

§ 5.4 Contingent Assignment of Subcontracts

§ 5.4.1 Each subcontract agreement for a portion of the Work is assigned by the Contractor to the Owner, provided that

- **.1** assignment is effective only after termination of the Contract by the Owner for cause pursuant to Section 14.2 and only for those subcontract agreements that the Owner accepts by notifying the Subcontractor and Contractor; and
- **.2** assignment is subject to the prior rights of the surety, if any, obligated under bond relating to the Contract.

AIA Document A201® – 2017. Copyright © 1911, 1915, 1918, 1925, 1937, 1951, 1958, 1961, 1963, 1966, 1970, 1976, 1987, 1997, 2007 and 2017 by The American Institute of Architects. All rights reserved. The "American Institute of Architects," "AIA," the AIA Logo, "A201," and "AIA Contract Documents" are registered trademarks and may not be used without permission. This document was produced by AIA software at 12:13:54 ET on 05/05/2021 under Order No.4897197182 which expires on 06/18/2021, is not for resale, is licensed for one-time use only, and may only be used in accordance with the AIA Contract Documents® Terms of Service. To report copyright violations, e-mail copyright@aia.org.
User Notes: (1416637268)

When the Owner accepts the assignment of a subcontract agreement, the Owner assumes the Contractor's rights and obligations under the subcontract.

§ 5.4.2 Upon such assignment, if the Work has been suspended for more than 30 days, the Subcontractor's compensation shall be equitably adjusted for increases in cost resulting from the suspension.

§ 5.4.3 Upon assignment to the Owner under this Section 5.4, the Owner may further assign the subcontract to a successor contractor or other entity. If the Owner assigns the subcontract to a successor contractor or other entity, the Owner shall nevertheless remain legally responsible for all of the successor contractor's obligations under the subcontract.

ARTICLE 6 CONSTRUCTION BY OWNER OR BY SEPARATE CONTRACTORS

§ 6.1 Owner's Right to Perform Construction and to Award Separate Contracts

§ 6.1.1 The term "Separate Contractor(s)" shall mean other contractors retained by the Owner under separate agreements. The Owner reserves the right to perform construction or operations related to the Project with the Owner's own forces, and with Separate Contractors retained under Conditions of the Contract substantially similar to those of this Contract, including those provisions of the Conditions of the Contract related to insurance and waiver of subrogation.

§ 6.1.2 When separate contracts are awarded for different portions of the Project or other construction or operations on the site, the term "Contractor" in the Contract Documents in each case shall mean the Contractor who executes each separate Owner-Contractor Agreement.

§ 6.1.3 The Owner shall provide for coordination of the activities of the Owner's own forces and of each Separate Contractor with the Work of the Contractor, who shall cooperate with them. The Contractor shall participate with any Separate Contractors and the Owner in reviewing their construction schedules. The Contractor shall make any revisions to its construction schedule deemed necessary after a joint review and mutual agreement. The construction schedules shall then constitute the schedules to be used by the Contractor, Separate Contractors, and the Owner until subsequently revised.

§ 6.1.4 Unless otherwise provided in the Contract Documents, when the Owner performs construction or operations related to the Project with the Owner's own forces or with Separate Contractors, the Owner or its Separate Contractors shall have the same obligations and rights that the Contractor has under the Conditions of the Contract, including, without excluding others, those stated in Article 3, this Article 6, and Articles 10, 11, and 12.

§ 6.2 Mutual Responsibility

§ 6.2.1 The Contractor shall afford the Owner and Separate Contractors reasonable opportunity for introduction and storage of their materials and equipment and performance of their activities, and shall connect and coordinate the Contractor's construction and operations with theirs as required by the Contract Documents.

§ 6.2.2 If part of the Contractor's Work depends for proper execution or results upon construction or operations by the Owner or a Separate Contractor, the Contractor shall, prior to proceeding with that portion of the Work, promptly notify the Architect of apparent discrepancies or defects in the construction or operations by the Owner or Separate Contractor that would render it unsuitable for proper execution and results of the Contractor's Work. Failure of the Contractor to notify the Architect of apparent discrepancies or defects prior to proceeding with the Work shall constitute an acknowledgment that the Owner's or Separate Contractor's completed or partially completed construction is fit and proper to receive the Contractor's Work. The Contractor shall not be responsible for discrepancies or defects in the construction or operations by the Owner or Separate Contractor that are not apparent.

§ 6.2.3 The Contractor shall reimburse the Owner for costs the Owner incurs that are payable to a Separate Contractor because of the Contractor's delays, improperly timed activities or defective construction. The Owner shall be responsible to the Contractor for costs the Contractor incurs because of a Separate Contractor's delays, improperly timed activities, damage to the Work or defective construction.

§ 6.2.4 The Contractor shall promptly remedy damage that the Contractor wrongfully causes to completed or partially completed construction or to property of the Owner or Separate Contractor as provided in Section 10.2.5.

AIA Document A201® – 2017. Copyright © 1911, 1915, 1918, 1925, 1937, 1951, 1958, 1961, 1963, 1966, 1970, 1976, 1987, 1997, 2007 and 2017 by The American Institute of Architects. All rights reserved. The "American Institute of Architects," "AIA," the AIA Logo, "A201," and "AIA Contract Documents" are registered trademarks and may not be used without permission. This document was produced by AIA software at 12:13:54 ET on 05/05/2021 under Order No.4897197182 which expires on 06/18/2021, is not for resale, is licensed for one-time use only, and may only be used in accordance with the AIA Contract Documents® Terms of Service. To report copyright violations, e-mail copyright@aia.org.
User Notes: (1416637268)

§ 6.2.5 The Owner and each Separate Contractor shall have the same responsibilities for cutting and patching as are described for the Contractor in Section 3.14.

§ 6.3 Owner's Right to Clean Up

If a dispute arises among the Contractor, Separate Contractors, and the Owner as to the responsibility under their respective contracts for maintaining the premises and surrounding area free from waste materials and rubbish, the Owner may clean up and the Architect will allocate the cost among those responsible.

ARTICLE 7 CHANGES IN THE WORK

§ 7.1 General

§ 7.1.1 Changes in the Work may be accomplished after execution of the Contract, and without invalidating the Contract, by Change Order, Construction Change Directive or order for a minor change in the Work, subject to the limitations stated in this Article 7 and elsewhere in the Contract Documents.

§ 7.1.2 A Change Order shall be based upon agreement among the Owner, Contractor, and Architect. A Construction Change Directive requires agreement by the Owner and Architect and may or may not be agreed to by the Contractor. An order for a minor change in the Work may be issued by the Architect alone.

§ 7.1.3 Changes in the Work shall be performed under applicable provisions of the Contract Documents. The Contractor shall proceed promptly with changes in the Work, unless otherwise provided in the Change Order, Construction Change Directive, or order for a minor change in the Work.

§ 7.2 Change Orders

§ 7.2.1 A Change Order is a written instrument prepared by the Architect and signed by the Owner, Contractor, and Architect stating their agreement upon all of the following:

- **.1** The change in the Work;
- **.2** The amount of the adjustment, if any, in the Contract Sum; and
- **.3** The extent of the adjustment, if any, in the Contract Time.

§ 7.3 Construction Change Directives

§ 7.3.1 A Construction Change Directive is a written order prepared by the Architect and signed by the Owner and Architect, directing a change in the Work prior to agreement on adjustment, if any, in the Contract Sum or Contract Time, or both. The Owner may by Construction Change Directive, without invalidating the Contract, order changes in the Work within the general scope of the Contract consisting of additions, deletions, or other revisions, the Contract Sum and Contract Time being adjusted accordingly.

§ 7.3.2 A Construction Change Directive shall be used in the absence of total agreement on the terms of a Change Order.

§ 7.3.3 If the Construction Change Directive provides for an adjustment to the Contract Sum, the adjustment shall be based on one of the following methods:

- **.1** Mutual acceptance of a lump sum properly itemized and supported by sufficient substantiating data to permit evaluation;
- **.2** Unit prices stated in the Contract Documents or subsequently agreed upon;
- **.3** Cost to be determined in a manner agreed upon by the parties and a mutually acceptable fixed or percentage fee; or
- **.4** As provided in Section 7.3.4.

§ 7.3.4 If the Contractor does not respond promptly or disagrees with the method for adjustment in the Contract Sum, the Architect shall determine the adjustment on the basis of reasonable expenditures and savings of those performing the Work attributable to the change, including, in case of an increase in the Contract Sum, an amount for overhead and profit as set forth in the Agreement, or if no such amount is set forth in the Agreement, a reasonable amount. In such case, and also under Section 7.3.3.3, the Contractor shall keep and present, in such form as the Architect may prescribe, an itemized accounting together with appropriate supporting data. Unless otherwise provided in the Contract Documents, costs for the purposes of this Section 7.3.4 shall be limited to the following:

AIA Document A201® – 2017. Copyright © 1911, 1915, 1918, 1925, 1937, 1951, 1958, 1961, 1963, 1966, 1970, 1976, 1987, 1997, 2007 and 2017 by The American Institute of Architects. All rights reserved. The "American Institute of Architects," "AIA," the AIA Logo, "A201," and "AIA Contract Documents" are registered trademarks and may not be used without permission. This document was produced by AIA software at 12:13:54 ET on 05/05/2021 under Order No.4897197182 which expires on 06/18/2021, is not for resale, is licensed for one-time use only, and may only be used in accordance with the AIA Contract Documents® Terms of Service. To report copyright violations, e-mail copyright@aia.org.
User Notes: (1416637268)

.1 Costs of labor, including applicable payroll taxes, fringe benefits required by agreement or custom, workers' compensation insurance, and other employee costs approved by the Architect;
.2 Costs of materials, supplies, and equipment, including cost of transportation, whether incorporated or consumed;
.3 Rental costs of machinery and equipment, exclusive of hand tools, whether rented from the Contractor or others;
.4 Costs of premiums for all bonds and insurance, permit fees, and sales, use, or similar taxes, directly related to the change; and
.5 Costs of supervision and field office personnel directly attributable to the change.

§ 7.3.5 If the Contractor disagrees with the adjustment in the Contract Time, the Contractor may make a Claim in accordance with applicable provisions of Article 15.

§ 7.3.6 Upon receipt of a Construction Change Directive, the Contractor shall promptly proceed with the change in the Work involved and advise the Architect of the Contractor's agreement or disagreement with the method, if any, provided in the Construction Change Directive for determining the proposed adjustment in the Contract Sum or Contract Time.

§ 7.3.7 A Construction Change Directive signed by the Contractor indicates the Contractor's agreement therewith, including adjustment in Contract Sum and Contract Time or the method for determining them. Such agreement shall be effective immediately and shall be recorded as a Change Order.

§ 7.3.8 The amount of credit to be allowed by the Contractor to the Owner for a deletion or change that results in a net decrease in the Contract Sum shall be actual net cost as confirmed by the Architect. When both additions and credits covering related Work or substitutions are involved in a change, the allowance for overhead and profit shall be figured on the basis of net increase, if any, with respect to that change.

§ 7.3.9 Pending final determination of the total cost of a Construction Change Directive to the Owner, the Contractor may request payment for Work completed under the Construction Change Directive in Applications for Payment. The Architect will make an interim determination for purposes of monthly certification for payment for those costs and certify for payment the amount that the Architect determines, in the Architect's professional judgment, to be reasonably justified. The Architect's interim determination of cost shall adjust the Contract Sum on the same basis as a Change Order, subject to the right of either party to disagree and assert a Claim in accordance with Article 15.

§ 7.3.10 When the Owner and Contractor agree with a determination made by the Architect concerning the adjustments in the Contract Sum and Contract Time, or otherwise reach agreement upon the adjustments, such agreement shall be effective immediately and the Architect will prepare a Change Order. Change Orders may be issued for all or any part of a Construction Change Directive.

§ 7.4 Minor Changes in the Work

The Architect may order minor changes in the Work that are consistent with the intent of the Contract Documents and do not involve an adjustment in the Contract Sum or an extension of the Contract Time. The Architect's order for minor changes shall be in writing. If the Contractor believes that the proposed minor change in the Work will affect the Contract Sum or Contract Time, the Contractor shall notify the Architect and shall not proceed to implement the change in the Work. If the Contractor performs the Work set forth in the Architect's order for a minor change without prior notice to the Architect that such change will affect the Contract Sum or Contract Time, the Contractor waives any adjustment to the Contract Sum or extension of the Contract Time.

ARTICLE 8 TIME

§ 8.1 Definitions

§ 8.1.1 Unless otherwise provided, Contract Time is the period of time, including authorized adjustments, allotted in the Contract Documents for Substantial Completion of the Work.

§ 8.1.2 The date of commencement of the Work is the date established in the Agreement.

§ 8.1.3 The date of Substantial Completion is the date certified by the Architect in accordance with Section 9.8.

AIA Document A201® – 2017. Copyright © 1911, 1915, 1918, 1925, 1937, 1951, 1958, 1961, 1963, 1966, 1970, 1976, 1987, 1997, 2007 and 2017 by The American Institute of Architects. All rights reserved. The "American Institute of Architects," "AIA," the AIA Logo, "A201," and "AIA Contract Documents" are registered trademarks and may not be used without permission. This document was produced by AIA software at 12:13:54 ET on 05/05/2021 under Order No.4897197182 which expires on 06/18/2021, is not for resale, is licensed for one-time use only, and may only be used in accordance with the AIA Contract Documents® Terms of Service. To report copyright violations, e-mail copyright@aia.org.
User Notes: (1416637268)

§ 8.1.4 The term "day" as used in the Contract Documents shall mean calendar day unless otherwise specifically defined.

§ 8.2 Progress and Completion

§ 8.2.1 Time limits stated in the Contract Documents are of the essence of the Contract. By executing the Agreement, the Contractor confirms that the Contract Time is a reasonable period for performing the Work.

§ 8.2.2 The Contractor shall not knowingly, except by agreement or instruction of the Owner in writing, commence the Work prior to the effective date of insurance required to be furnished by the Contractor and Owner.

§ 8.2.3 The Contractor shall proceed expeditiously with adequate forces and shall achieve Substantial Completion within the Contract Time.

§ 8.3 Delays and Extensions of Time

§ 8.3.1 If the Contractor is delayed at any time in the commencement or progress of the Work by (1) an act or neglect of the Owner or Architect, of an employee of either, or of a Separate Contractor; (2) by changes ordered in the Work; (3) by labor disputes, fire, unusual delay in deliveries, unavoidable casualties, adverse weather conditions documented in accordance with Section 15.1.6.2, or other causes beyond the Contractor's control; (4) by delay authorized by the Owner pending mediation and binding dispute resolution; or (5) by other causes that the Contractor asserts, and the Architect determines, justify delay, then the Contract Time shall be extended for such reasonable time as the Architect may determine.

§ 8.3.2 Claims relating to time shall be made in accordance with applicable provisions of Article 15.

§ 8.3.3 This Section 8.3 does not preclude recovery of damages for delay by either party under other provisions of the Contract Documents.

ARTICLE 9 PAYMENTS AND COMPLETION

§ 9.1 Contract Sum

§ 9.1.1 The Contract Sum is stated in the Agreement and, including authorized adjustments, is the total amount payable by the Owner to the Contractor for performance of the Work under the Contract Documents.

§ 9.1.2 If unit prices are stated in the Contract Documents or subsequently agreed upon, and if quantities originally contemplated are materially changed so that application of such unit prices to the actual quantities causes substantial inequity to the Owner or Contractor, the applicable unit prices shall be equitably adjusted.

§ 9.2 Schedule of Values

Where the Contract is based on a stipulated sum or Guaranteed Maximum Price, the Contractor shall submit a schedule of values to the Architect before the first Application for Payment, allocating the entire Contract Sum to the various portions of the Work. The schedule of values shall be prepared in the form, and supported by the data to substantiate its accuracy, required by the Architect. This schedule, unless objected to by the Architect, shall be used as a basis for reviewing the Contractor's Applications for Payment. Any changes to the schedule of values shall be submitted to the Architect and supported by such data to substantiate its accuracy as the Architect may require, and unless objected to by the Architect, shall be used as a basis for reviewing the Contractor's subsequent Applications for Payment.

§ 9.3 Applications for Payment

§ 9.3.1 At least ten days before the date established for each progress payment, the Contractor shall submit to the Architect an itemized Application for Payment prepared in accordance with the schedule of values, if required under Section 9.2, for completed portions of the Work. The application shall be notarized, if required, and supported by all data substantiating the Contractor's right to payment that the Owner or Architect require, such as copies of requisitions, and releases and waivers of liens from Subcontractors and suppliers, and shall reflect retainage if provided for in the Contract Documents.

§ 9.3.1.1 As provided in Section 7.3.9, such applications may include requests for payment on account of changes in the Work that have been properly authorized by Construction Change Directives, or by interim determinations of the Architect, but not yet included in Change Orders.

AIA Document A201® – 2017. Copyright © 1911, 1915, 1918, 1925, 1937, 1951, 1958, 1961, 1963, 1966, 1970, 1976, 1987, 1997, 2007 and 2017 by The American Institute of Architects. All rights reserved. The "American Institute of Architects," "AIA," the AIA Logo, "A201," and "AIA Contract Documents" are registered trademarks and may not be used without permission. This document was produced by AIA software at 12:13:54 ET on 05/05/2021 under Order No.4897197182 which expires on 06/18/2021, is not for resale, is licensed for one-time use only, and may only be used in accordance with the AIA Contract Documents® Terms of Service. To report copyright violations, e-mail copyright@aia.org.
User Notes: (1416637268)

§ 9.3.1.2 Applications for Payment shall not include requests for payment for portions of the Work for which the Contractor does not intend to pay a Subcontractor or supplier, unless such Work has been performed by others whom the Contractor intends to pay.

§ 9.3.2 Unless otherwise provided in the Contract Documents, payments shall be made on account of materials and equipment delivered and suitably stored at the site for subsequent incorporation in the Work. If approved in advance by the Owner, payment may similarly be made for materials and equipment suitably stored off the site at a location agreed upon in writing. Payment for materials and equipment stored on or off the site shall be conditioned upon compliance by the Contractor with procedures satisfactory to the Owner to establish the Owner's title to such materials and equipment or otherwise protect the Owner's interest, and shall include the costs of applicable insurance, storage, and transportation to the site, for such materials and equipment stored off the site.

§ 9.3.3 The Contractor warrants that title to all Work covered by an Application for Payment will pass to the Owner no later than the time of payment. The Contractor further warrants that upon submittal of an Application for Payment all Work for which Certificates for Payment have been previously issued and payments received from the Owner shall, to the best of the Contractor's knowledge, information, and belief, be free and clear of liens, claims, security interests, or encumbrances, in favor of the Contractor, Subcontractors, suppliers, or other persons or entities that provided labor, materials, and equipment relating to the Work.

§ 9.4 Certificates for Payment

§ 9.4.1 The Architect will, within seven days after receipt of the Contractor's Application for Payment, either (1) issue to the Owner a Certificate for Payment in the full amount of the Application for Payment, with a copy to the Contractor; or (2) issue to the Owner a Certificate for Payment for such amount as the Architect determines is properly due, and notify the Contractor and Owner of the Architect's reasons for withholding certification in part as provided in Section 9.5.1; or (3) withhold certification of the entire Application for Payment, and notify the Contractor and Owner of the Architect's reason for withholding certification in whole as provided in Section 9.5.1.

§ 9.4.2 The issuance of a Certificate for Payment will constitute a representation by the Architect to the Owner, based on the Architect's evaluation of the Work and the data in the Application for Payment, that, to the best of the Architect's knowledge, information, and belief, the Work has progressed to the point indicated, the quality of the Work is in accordance with the Contract Documents, and that the Contractor is entitled to payment in the amount certified. The foregoing representations are subject to an evaluation of the Work for conformance with the Contract Documents upon Substantial Completion, to results of subsequent tests and inspections, to correction of minor deviations from the Contract Documents prior to completion, and to specific qualifications expressed by the Architect. However, the issuance of a Certificate for Payment will not be a representation that the Architect has (1) made exhaustive or continuous on-site inspections to check the quality or quantity of the Work; (2) reviewed construction means, methods, techniques, sequences, or procedures; (3) reviewed copies of requisitions received from Subcontractors and suppliers and other data requested by the Owner to substantiate the Contractor's right to payment; or (4) made examination to ascertain how or for what purpose the Contractor has used money previously paid on account of the Contract Sum.

§ 9.5 Decisions to Withhold Certification

§ 9.5.1 The Architect may withhold a Certificate for Payment in whole or in part, to the extent reasonably necessary to protect the Owner, if in the Architect's opinion the representations to the Owner required by Section 9.4.2 cannot be made. If the Architect is unable to certify payment in the amount of the Application, the Architect will notify the Contractor and Owner as provided in Section 9.4.1. If the Contractor and Architect cannot agree on a revised amount, the Architect will promptly issue a Certificate for Payment for the amount for which the Architect is able to make such representations to the Owner. The Architect may also withhold a Certificate for Payment or, because of subsequently discovered evidence, may nullify the whole or a part of a Certificate for Payment previously issued, to such extent as may be necessary in the Architect's opinion to protect the Owner from loss for which the Contractor is responsible, including loss resulting from acts and omissions described in Section 3.3.2, because of

- **.1** defective Work not remedied;
- **.2** third party claims filed or reasonable evidence indicating probable filing of such claims, unless security acceptable to the Owner is provided by the Contractor;
- **.3** failure of the Contractor to make payments properly to Subcontractors or suppliers for labor, materials or equipment;

AIA Document A201® – 2017. Copyright © 1911, 1915, 1918, 1925, 1937, 1951, 1958, 1961, 1963, 1966, 1970, 1976, 1987, 1997, 2007 and 2017 by The American Institute of Architects. All rights reserved. The "American Institute of Architects," "AIA," the AIA Logo, "A201," and "AIA Contract Documents" are registered trademarks and may not be used without permission. This document was produced by AIA software at 12:13:54 ET on 05/05/2021 under Order No.4897197182 which expires on 06/18/2021, is not for resale, is licensed for one-time use only, and may only be used in accordance with the AIA Contract Documents® Terms of Service. To report copyright violations, e-mail copyright@aia.org.
User Notes: (1416637268)

.4 reasonable evidence that the Work cannot be completed for the unpaid balance of the Contract Sum;
.5 damage to the Owner or a Separate Contractor;
.6 reasonable evidence that the Work will not be completed within the Contract Time, and that the unpaid balance would not be adequate to cover actual or liquidated damages for the anticipated delay; or
.7 repeated failure to carry out the Work in accordance with the Contract Documents.

§ 9.5.2 When either party disputes the Architect's decision regarding a Certificate for Payment under Section 9.5.1, in whole or in part, that party may submit a Claim in accordance with Article 15.

§ 9.5.3 When the reasons for withholding certification are removed, certification will be made for amounts previously withheld.

§ 9.5.4 If the Architect withholds certification for payment under Section 9.5.1.3, the Owner may, at its sole option, issue joint checks to the Contractor and to any Subcontractor or supplier to whom the Contractor failed to make payment for Work properly performed or material or equipment suitably delivered. If the Owner makes payments by joint check, the Owner shall notify the Architect and the Contractor shall reflect such payment on its next Application for Payment.

§ 9.6 Progress Payments

§ 9.6.1 After the Architect has issued a Certificate for Payment, the Owner shall make payment in the manner and within the time provided in the Contract Documents, and shall so notify the Architect.

§ 9.6.2 The Contractor shall pay each Subcontractor, no later than seven days after receipt of payment from the Owner, the amount to which the Subcontractor is entitled, reflecting percentages actually retained from payments to the Contractor on account of the Subcontractor's portion of the Work. The Contractor shall, by appropriate agreement with each Subcontractor, require each Subcontractor to make payments to Sub-subcontractors in a similar manner.

§ 9.6.3 The Architect will, on request, furnish to a Subcontractor, if practicable, information regarding percentages of completion or amounts applied for by the Contractor and action taken thereon by the Architect and Owner on account of portions of the Work done by such Subcontractor.

§ 9.6.4 The Owner has the right to request written evidence from the Contractor that the Contractor has properly paid Subcontractors and suppliers amounts paid by the Owner to the Contractor for subcontracted Work. If the Contractor fails to furnish such evidence within seven days, the Owner shall have the right to contact Subcontractors and suppliers to ascertain whether they have been properly paid. Neither the Owner nor Architect shall have an obligation to pay, or to see to the payment of money to, a Subcontractor or supplier, except as may otherwise be required by law.

§ 9.6.5 The Contractor's payments to suppliers shall be treated in a manner similar to that provided in Sections 9.6.2, 9.6.3 and 9.6.4.

§ 9.6.6 A Certificate for Payment, a progress payment, or partial or entire use or occupancy of the Project by the Owner shall not constitute acceptance of Work not in accordance with the Contract Documents.

§ 9.6.7 Unless the Contractor provides the Owner with a payment bond in the full penal sum of the Contract Sum, payments received by the Contractor for Work properly performed by Subcontractors or provided by suppliers shall be held by the Contractor for those Subcontractors or suppliers who performed Work or furnished materials, or both, under contract with the Contractor for which payment was made by the Owner. Nothing contained herein shall require money to be placed in a separate account and not commingled with money of the Contractor, create any fiduciary liability or tort liability on the part of the Contractor for breach of trust, or entitle any person or entity to an award of punitive damages against the Contractor for breach of the requirements of this provision.

§ 9.6.8 Provided the Owner has fulfilled its payment obligations under the Contract Documents, the Contractor shall defend and indemnify the Owner from all loss, liability, damage or expense, including reasonable attorney's fees and litigation expenses, arising out of any lien claim or other claim for payment by any Subcontractor or supplier of any tier. Upon receipt of notice of a lien claim or other claim for payment, the Owner shall notify the Contractor. If approved by the applicable court, when required, the Contractor may substitute a surety bond for the property against which the lien or other claim for payment has been asserted.

AIA Document A201® – 2017. Copyright © 1911, 1915, 1918, 1925, 1937, 1951, 1958, 1961, 1963, 1966, 1970, 1976, 1987, 1997, 2007 and 2017 by The American Institute of Architects. All rights reserved. The "American Institute of Architects," "AIA," the AIA Logo, "A201," and "AIA Contract Documents" are registered trademarks and may not be used without permission. This document was produced by AIA software at 12:13:54 ET on 05/05/2021 under Order No.4897197182 which expires on 06/18/2021, is not for resale, is licensed for one-time use only, and may only be used in accordance with the AIA Contract Documents® Terms of Service. To report copyright violations, e-mail copyright@aia.org.
User Notes: (1416637268)

§ 9.7 Failure of Payment

If the Architect does not issue a Certificate for Payment, through no fault of the Contractor, within seven days after receipt of the Contractor's Application for Payment, or if the Owner does not pay the Contractor within seven days after the date established in the Contract Documents, the amount certified by the Architect or awarded by binding dispute resolution, then the Contractor may, upon seven additional days' notice to the Owner and Architect, stop the Work until payment of the amount owing has been received. The Contract Time shall be extended appropriately and the Contract Sum shall be increased by the amount of the Contractor's reasonable costs of shutdown, delay and start-up, plus interest as provided for in the Contract Documents.

§ 9.8 Substantial Completion

§ 9.8.1 Substantial Completion is the stage in the progress of the Work when the Work or designated portion thereof is sufficiently complete in accordance with the Contract Documents so that the Owner can occupy or utilize the Work for its intended use.

§ 9.8.2 When the Contractor considers that the Work, or a portion thereof which the Owner agrees to accept separately, is substantially complete, the Contractor shall prepare and submit to the Architect a comprehensive list of items to be completed or corrected prior to final payment. Failure to include an item on such list does not alter the responsibility of the Contractor to complete all Work in accordance with the Contract Documents.

§ 9.8.3 Upon receipt of the Contractor's list, the Architect will make an inspection to determine whether the Work or designated portion thereof is substantially complete. If the Architect's inspection discloses any item, whether or not included on the Contractor's list, which is not sufficiently complete in accordance with the Contract Documents so that the Owner can occupy or utilize the Work or designated portion thereof for its intended use, the Contractor shall, before issuance of the Certificate of Substantial Completion, complete or correct such item upon notification by the Architect. In such case, the Contractor shall then submit a request for another inspection by the Architect to determine Substantial Completion.

§ 9.8.4 When the Work or designated portion thereof is substantially complete, the Architect will prepare a Certificate of Substantial Completion that shall establish the date of Substantial Completion; establish responsibilities of the Owner and Contractor for security, maintenance, heat, utilities, damage to the Work and insurance; and fix the time within which the Contractor shall finish all items on the list accompanying the Certificate. Warranties required by the Contract Documents shall commence on the date of Substantial Completion of the Work or designated portion thereof unless otherwise provided in the Certificate of Substantial Completion.

§ 9.8.5 The Certificate of Substantial Completion shall be submitted to the Owner and Contractor for their written acceptance of responsibilities assigned to them in the Certificate. Upon such acceptance, and consent of surety if any, the Owner shall make payment of retainage applying to the Work or designated portion thereof. Such payment shall be adjusted for Work that is incomplete or not in accordance with the requirements of the Contract Documents.

§ 9.9 Partial Occupancy or Use

§ 9.9.1 The Owner may occupy or use any completed or partially completed portion of the Work at any stage when such portion is designated by separate agreement with the Contractor, provided such occupancy or use is consented to by the insurer and authorized by public authorities having jurisdiction over the Project. Such partial occupancy or use may commence whether or not the portion is substantially complete, provided the Owner and Contractor have accepted in writing the responsibilities assigned to each of them for payments, retainage, if any, security, maintenance, heat, utilities, damage to the Work and insurance, and have agreed in writing concerning the period for correction of the Work and commencement of warranties required by the Contract Documents. When the Contractor considers a portion substantially complete, the Contractor shall prepare and submit a list to the Architect as provided under Section 9.8.2. Consent of the Contractor to partial occupancy or use shall not be unreasonably withheld. The stage of the progress of the Work shall be determined by written agreement between the Owner and Contractor or, if no agreement is reached, by decision of the Architect.

§ 9.9.2 Immediately prior to such partial occupancy or use, the Owner, Contractor, and Architect shall jointly inspect the area to be occupied or portion of the Work to be used in order to determine and record the condition of the Work.

AIA Document A201® – 2017. Copyright © 1911, 1915, 1918, 1925, 1937, 1951, 1958, 1961, 1963, 1966, 1970, 1976, 1987, 1997, 2007 and 2017 by The American Institute of Architects. All rights reserved. The "American Institute of Architects," "AIA," the AIA Logo, "A201," and "AIA Contract Documents" are registered trademarks and may not be used without permission. This document was produced by AIA software at 12:13:54 ET on 05/05/2021 under Order No.4897197182 which expires on 06/18/2021, is not for resale, is licensed for one-time use only, and may only be used in accordance with the AIA Contract Documents® Terms of Service. To report copyright violations, e-mail copyright@aia.org.
User Notes: (1416637268)

§ 9.9.3 Unless otherwise agreed upon, partial occupancy or use of a portion or portions of the Work shall not constitute acceptance of Work not complying with the requirements of the Contract Documents.

§ 9.10 Final Completion and Final Payment

§ 9.10.1 Upon receipt of the Contractor's notice that the Work is ready for final inspection and acceptance and upon receipt of a final Application for Payment, the Architect will promptly make such inspection. When the Architect finds the Work acceptable under the Contract Documents and the Contract fully performed, the Architect will promptly issue a final Certificate for Payment stating that to the best of the Architect's knowledge, information and belief, and on the basis of the Architect's on-site visits and inspections, the Work has been completed in accordance with the Contract Documents and that the entire balance found to be due the Contractor and noted in the final Certificate is due and payable. The Architect's final Certificate for Payment will constitute a further representation that conditions listed in Section 9.10.2 as precedent to the Contractor's being entitled to final payment have been fulfilled.

§ 9.10.2 Neither final payment nor any remaining retained percentage shall become due until the Contractor submits to the Architect (1) an affidavit that payrolls, bills for materials and equipment, and other indebtedness connected with the Work for which the Owner or the Owner's property might be responsible or encumbered (less amounts withheld by Owner) have been paid or otherwise satisfied, (2) a certificate evidencing that insurance required by the Contract Documents to remain in force after final payment is currently in effect, (3) a written statement that the Contractor knows of no reason that the insurance will not be renewable to cover the period required by the Contract Documents, (4) consent of surety, if any, to final payment, (5) documentation of any special warranties, such as manufacturers' warranties or specific Subcontractor warranties, and (6) if required by the Owner, other data establishing payment or satisfaction of obligations, such as receipts and releases and waivers of liens, claims, security interests, or encumbrances arising out of the Contract, to the extent and in such form as may be designated by the Owner. If a Subcontractor refuses to furnish a release or waiver required by the Owner, the Contractor may furnish a bond satisfactory to the Owner to indemnify the Owner against such lien, claim, security interest, or encumbrance. If a lien, claim, security interest, or encumbrance remains unsatisfied after payments are made, the Contractor shall refund to the Owner all money that the Owner may be compelled to pay in discharging the lien, claim, security interest, or encumbrance, including all costs and reasonable attorneys' fees.

§ 9.10.3 If, after Substantial Completion of the Work, final completion thereof is materially delayed through no fault of the Contractor or by issuance of Change Orders affecting final completion, and the Architect so confirms, the Owner shall, upon application by the Contractor and certification by the Architect, and without terminating the Contract, make payment of the balance due for that portion of the Work fully completed, corrected, and accepted. If the remaining balance for Work not fully completed or corrected is less than retainage stipulated in the Contract Documents, and if bonds have been furnished, the written consent of the surety to payment of the balance due for that portion of the Work fully completed and accepted shall be submitted by the Contractor to the Architect prior to certification of such payment. Such payment shall be made under terms and conditions governing final payment, except that it shall not constitute a waiver of Claims.

§ 9.10.4 The making of final payment shall constitute a waiver of Claims by the Owner except those arising from

- **.1** liens, Claims, security interests, or encumbrances arising out of the Contract and unsettled;
- **.2** failure of the Work to comply with the requirements of the Contract Documents;
- **.3** terms of special warranties required by the Contract Documents; or
- **.4** audits performed by the Owner, if permitted by the Contract Documents, after final payment.

§ 9.10.5 Acceptance of final payment by the Contractor, a Subcontractor, or a supplier, shall constitute a waiver of claims by that payee except those previously made in writing and identified by that payee as unsettled at the time of final Application for Payment.

ARTICLE 10 PROTECTION OF PERSONS AND PROPERTY

§ 10.1 Safety Precautions and Programs

The Contractor shall be responsible for initiating, maintaining, and supervising all safety precautions and programs in connection with the performance of the Contract.

§ 10.2 Safety of Persons and Property

§ 10.2.1 The Contractor shall take reasonable precautions for safety of, and shall provide reasonable protection to prevent damage, injury, or loss to

AIA Document A201® – 2017. Copyright © 1911, 1915, 1918, 1925, 1937, 1951, 1958, 1961, 1963, 1966, 1970, 1976, 1987, 1997, 2007 and 2017 by The American Institute of Architects. All rights reserved. The "American Institute of Architects," "AIA," the AIA Logo, "A201," and "AIA Contract Documents" are registered trademarks and may not be used without permission. This document was produced by AIA software at 12:13:54 ET on 05/05/2021 under Order No.4897197182 which expires on 06/18/2021, is not for resale, is licensed for one-time use only, and may only be used in accordance with the AIA Contract Documents® Terms of Service. To report copyright violations, e-mail copyright@aia.org.
User Notes: (1416637268)

.1 employees on the Work and other persons who may be affected thereby;
.2 the Work and materials and equipment to be incorporated therein, whether in storage on or off the site, under care, custody, or control of the Contractor, a Subcontractor, or a Sub-subcontractor; and
.3 other property at the site or adjacent thereto, such as trees, shrubs, lawns, walks, pavements, roadways, structures, and utilities not designated for removal, relocation, or replacement in the course of construction.

§ 10.2.2 The Contractor shall comply with, and give notices required by applicable laws, statutes, ordinances, codes, rules and regulations, and lawful orders of public authorities, bearing on safety of persons or property or their protection from damage, injury, or loss.

§ 10.2.3 The Contractor shall implement, erect, and maintain, as required by existing conditions and performance of the Contract, reasonable safeguards for safety and protection, including posting danger signs and other warnings against hazards; promulgating safety regulations; and notifying the owners and users of adjacent sites and utilities of the safeguards.

§ 10.2.4 When use or storage of explosives or other hazardous materials or equipment, or unusual methods are necessary for execution of the Work, the Contractor shall exercise utmost care and carry on such activities under supervision of properly qualified personnel.

§ 10.2.5 The Contractor shall promptly remedy damage and loss (other than damage or loss insured under property insurance required by the Contract Documents) to property referred to in Sections 10.2.1.2 and 10.2.1.3 caused in whole or in part by the Contractor, a Subcontractor, a Sub-subcontractor, or anyone directly or indirectly employed by any of them, or by anyone for whose acts they may be liable and for which the Contractor is responsible under Sections 10.2.1.2 and 10.2.1.3. The Contractor may make a Claim for the cost to remedy the damage or loss to the extent such damage or loss is attributable to acts or omissions of the Owner or Architect or anyone directly or indirectly employed by either of them, or by anyone for whose acts either of them may be liable, and not attributable to the fault or negligence of the Contractor. The foregoing obligations of the Contractor are in addition to the Contractor's obligations under Section 3.18.

§ 10.2.6 The Contractor shall designate a responsible member of the Contractor's organization at the site whose duty shall be the prevention of accidents. This person shall be the Contractor's superintendent unless otherwise designated by the Contractor in writing to the Owner and Architect.

§ 10.2.7 The Contractor shall not permit any part of the construction or site to be loaded so as to cause damage or create an unsafe condition.

§ 10.2.8 Injury or Damage to Person or Property
If either party suffers injury or damage to person or property because of an act or omission of the other party, or of others for whose acts such party is legally responsible, notice of the injury or damage, whether or not insured, shall be given to the other party within a reasonable time not exceeding 21 days after discovery. The notice shall provide sufficient detail to enable the other party to investigate the matter.

§ 10.3 Hazardous Materials and Substances
§ 10.3.1 The Contractor is responsible for compliance with any requirements included in the Contract Documents regarding hazardous materials or substances. If the Contractor encounters a hazardous material or substance not addressed in the Contract Documents and if reasonable precautions will be inadequate to prevent foreseeable bodily injury or death to persons resulting from a material or substance, including but not limited to asbestos or polychlorinated biphenyl (PCB), encountered on the site by the Contractor, the Contractor shall, upon recognizing the condition, immediately stop Work in the affected area and notify the Owner and Architect of the condition.

§ 10.3.2 Upon receipt of the Contractor's notice, the Owner shall obtain the services of a licensed laboratory to verify the presence or absence of the material or substance reported by the Contractor and, in the event such material or substance is found to be present, to cause it to be rendered harmless. Unless otherwise required by the Contract Documents, the Owner shall furnish in writing to the Contractor and Architect the names and qualifications of persons or entities who are to perform tests verifying the presence or absence of the material or substance or who are to perform the task of removal or safe containment of the material or substance. The Contractor and the Architect will

AIA Document A201® – 2017. Copyright © 1911, 1915, 1918, 1925, 1937, 1951, 1958, 1961, 1963, 1966, 1970, 1976, 1987, 1997, 2007 and 2017 by The American Institute of Architects. All rights reserved. The "American Institute of Architects," "AIA," the AIA Logo, "A201," and "AIA Contract Documents" are registered trademarks and may not be used without permission. This document was produced by AIA software at 12:13:54 ET on 05/05/2021 under Order No.4897197182 which expires on 06/18/2021, is not for resale, is licensed for one-time use only, and may only be used in accordance with the AIA Contract Documents® Terms of Service. To report copyright violations, e-mail copyright@aia.org.
User Notes: (1416637268)

promptly reply to the Owner in writing stating whether or not either has reasonable objection to the persons or entities proposed by the Owner. If either the Contractor or Architect has an objection to a person or entity proposed by the Owner, the Owner shall propose another to whom the Contractor and the Architect have no reasonable objection. When the material or substance has been rendered harmless, Work in the affected area shall resume upon written agreement of the Owner and Contractor. By Change Order, the Contract Time shall be extended appropriately and the Contract Sum shall be increased by the amount of the Contractor's reasonable additional costs of shutdown, delay, and start-up.

§ 10.3.3 To the fullest extent permitted by law, the Owner shall indemnify and hold harmless the Contractor, Subcontractors, Architect, Architect's consultants, and agents and employees of any of them from and against claims, damages, losses, and expenses, including but not limited to attorneys' fees, arising out of or resulting from performance of the Work in the affected area if in fact the material or substance presents the risk of bodily injury or death as described in Section 10.3.1 and has not been rendered harmless, provided that such claim, damage, loss, or expense is attributable to bodily injury, sickness, disease or death, or to injury to or destruction of tangible property (other than the Work itself), except to the extent that such damage, loss, or expense is due to the fault or negligence of the party seeking indemnity.

§ 10.3.4 The Owner shall not be responsible under this Section 10.3 for hazardous materials or substances the Contractor brings to the site unless such materials or substances are required by the Contract Documents. The Owner shall be responsible for hazardous materials or substances required by the Contract Documents, except to the extent of the Contractor's fault or negligence in the use and handling of such materials or substances.

§ 10.3.5 The Contractor shall reimburse the Owner for the cost and expense the Owner incurs (1) for remediation of hazardous materials or substances the Contractor brings to the site and negligently handles, or (2) where the Contractor fails to perform its obligations under Section 10.3.1, except to the extent that the cost and expense are due to the Owner's fault or negligence.

§ 10.3.6 If, without negligence on the part of the Contractor, the Contractor is held liable by a government agency for the cost of remediation of a hazardous material or substance solely by reason of performing Work as required by the Contract Documents, the Owner shall reimburse the Contractor for all cost and expense thereby incurred.

§ 10.4 Emergencies

In an emergency affecting safety of persons or property, the Contractor shall act, at the Contractor's discretion, to prevent threatened damage, injury, or loss. Additional compensation or extension of time claimed by the Contractor on account of an emergency shall be determined as provided in Article 15 and Article 7.

ARTICLE 11 INSURANCE AND BONDS

§ 11.1 Contractor's Insurance and Bonds

§ 11.1.1 The Contractor shall purchase and maintain insurance of the types and limits of liability, containing the endorsements, and subject to the terms and conditions, as described in the Agreement or elsewhere in the Contract Documents. The Contractor shall purchase and maintain the required insurance from an insurance company or insurance companies lawfully authorized to issue insurance in the jurisdiction where the Project is located. The Owner, Architect, and Architect's consultants shall be named as additional insureds under the Contractor's commercial general liability policy or as otherwise described in the Contract Documents.

§ 11.1.2 The Contractor shall provide surety bonds of the types, for such penal sums, and subject to such terms and conditions as required by the Contract Documents. The Contractor shall purchase and maintain the required bonds from a company or companies lawfully authorized to issue surety bonds in the jurisdiction where the Project is located.

§ 11.1.3 Upon the request of any person or entity appearing to be a potential beneficiary of bonds covering payment of obligations arising under the Contract, the Contractor shall promptly furnish a copy of the bonds or shall authorize a copy to be furnished.

§ 11.1.4 Notice of Cancellation or Expiration of Contractor's Required Insurance. Within three (3) business days of the date the Contractor becomes aware of an impending or actual cancellation or expiration of any insurance required by the Contract Documents, the Contractor shall provide notice to the Owner of such impending or actual cancellation or expiration. Upon receipt of notice from the Contractor, the Owner shall, unless the lapse in coverage arises from an act

AIA Document A201® – 2017. Copyright © 1911, 1915, 1918, 1925, 1937, 1951, 1958, 1961, 1963, 1966, 1970, 1976, 1987, 1997, 2007 and 2017 by The American Institute of Architects. All rights reserved. The "American Institute of Architects," "AIA," the AIA Logo, "A201," and "AIA Contract Documents" are registered trademarks and may not be used without permission. This document was produced by AIA software at 12:13:54 ET on 05/05/2021 under Order No.4897197182 which expires on 06/18/2021, is not for resale, is licensed for one-time use only, and may only be used in accordance with the AIA Contract Documents® Terms of Service. To report copyright violations, e-mail copyright@aia.org.
User Notes: (1416637268)

or omission of the Owner, have the right to stop the Work until the lapse in coverage has been cured by the procurement of replacement coverage by the Contractor. The furnishing of notice by the Contractor shall not relieve the Contractor of any contractual obligation to provide any required coverage.

§ 11.2 Owner's Insurance

§ 11.2.1 The Owner shall purchase and maintain insurance of the types and limits of liability, containing the endorsements, and subject to the terms and conditions, as described in the Agreement or elsewhere in the Contract Documents. The Owner shall purchase and maintain the required insurance from an insurance company or insurance companies lawfully authorized to issue insurance in the jurisdiction where the Project is located.

§ 11.2.2 Failure to Purchase Required Property Insurance. If the Owner fails to purchase and maintain the required property insurance, with all of the coverages and in the amounts described in the Agreement or elsewhere in the Contract Documents, the Owner shall inform the Contractor in writing prior to commencement of the Work. Upon receipt of notice from the Owner, the Contractor may delay commencement of the Work and may obtain insurance that will protect the interests of the Contractor, Subcontractors, and Sub-Subcontractors in the Work. When the failure to provide coverage has been cured or resolved, the Contract Sum and Contract Time shall be equitably adjusted. In the event the Owner fails to procure coverage, the Owner waives all rights against the Contractor, Subcontractors, and Sub-subcontractors to the extent the loss to the Owner would have been covered by the insurance to have been procured by the Owner. The cost of the insurance shall be charged to the Owner by a Change Order. If the Owner does not provide written notice, and the Contractor is damaged by the failure or neglect of the Owner to purchase or maintain the required insurance, the Owner shall reimburse the Contractor for all reasonable costs and damages attributable thereto.

§ 11.2.3 Notice of Cancellation or Expiration of Owner's Required Property Insurance. Within three (3) business days of the date the Owner becomes aware of an impending or actual cancellation or expiration of any property insurance required by the Contract Documents, the Owner shall provide notice to the Contractor of such impending or actual cancellation or expiration. Unless the lapse in coverage arises from an act or omission of the Contractor: (1) the Contractor, upon receipt of notice from the Owner, shall have the right to stop the Work until the lapse in coverage has been cured by the procurement of replacement coverage by either the Owner or the Contractor; (2) the Contract Time and Contract Sum shall be equitably adjusted; and (3) the Owner waives all rights against the Contractor, Subcontractors, and Sub-subcontractors to the extent any loss to the Owner would have been covered by the insurance had it not expired or been cancelled. If the Contractor purchases replacement coverage, the cost of the insurance shall be charged to the Owner by an appropriate Change Order. The furnishing of notice by the Owner shall not relieve the Owner of any contractual obligation to provide required insurance.

§ 11.3 Waivers of Subrogation

§ 11.3.1 The Owner and Contractor waive all rights against (1) each other and any of their subcontractors, sub-subcontractors, agents, and employees, each of the other; (2) the Architect and Architect's consultants; and (3) Separate Contractors, if any, and any of their subcontractors, sub-subcontractors, agents, and employees, for damages caused by fire, or other causes of loss, to the extent those losses are covered by property insurance required by the Agreement or other property insurance applicable to the Project, except such rights as they have to proceeds of such insurance. The Owner or Contractor, as appropriate, shall require similar written waivers in favor of the individuals and entities identified above from the Architect, Architect's consultants, Separate Contractors, subcontractors, and sub-subcontractors. The policies of insurance purchased and maintained by each person or entity agreeing to waive claims pursuant to this section 11.3.1 shall not prohibit this waiver of subrogation. This waiver of subrogation shall be effective as to a person or entity (1) even though that person or entity would otherwise have a duty of indemnification, contractual or otherwise, (2) even though that person or entity did not pay the insurance premium directly or indirectly, or (3) whether or not the person or entity had an insurable interest in the damaged property.

§ 11.3.2 If during the Project construction period the Owner insures properties, real or personal or both, at or adjacent to the site by property insurance under policies separate from those insuring the Project, or if after final payment property insurance is to be provided on the completed Project through a policy or policies other than those insuring the Project during the construction period, to the extent permissible by such policies, the Owner waives all rights in accordance with the terms of Section 11.3.1 for damages caused by fire or other causes of loss covered by this separate property insurance.

§ 11.4 Loss of Use, Business Interruption, and Delay in Completion Insurance

AIA Document A201® – 2017. Copyright © 1911, 1915, 1918, 1925, 1937, 1951, 1958, 1961, 1963, 1966, 1970, 1976, 1987, 1997, 2007 and 2017 by The American Institute of Architects. All rights reserved. The "American Institute of Architects," "AIA," the AIA Logo, "A201," and "AIA Contract Documents" are registered trademarks and may not be used without permission. This document was produced by AIA software at 12:13:54 ET on 05/05/2021 under Order No.4897197182 which expires on 06/18/2021, is not for resale, is licensed for one-time use only, and may only be used in accordance with the AIA Contract Documents® Terms of Service. To report copyright violations, e-mail copyright@aia.org.
User Notes: (1416637268)

The Owner, at the Owner's option, may purchase and maintain insurance that will protect the Owner against loss of use of the Owner's property, or the inability to conduct normal operations, due to fire or other causes of loss. The Owner waives all rights of action against the Contractor and Architect for loss of use of the Owner's property, due to fire or other hazards however caused.

§11.5 Adjustment and Settlement of Insured Loss

§ 11.5.1 A loss insured under the property insurance required by the Agreement shall be adjusted by the Owner as fiduciary and made payable to the Owner as fiduciary for the insureds, as their interests may appear, subject to requirements of any applicable mortgagee clause and of Section 11.5.2. The Owner shall pay the Architect and Contractor their just shares of insurance proceeds received by the Owner, and by appropriate agreements the Architect and Contractor shall make payments to their consultants and Subcontractors in similar manner.

§ 11.5.2 Prior to settlement of an insured loss, the Owner shall notify the Contractor of the terms of the proposed settlement as well as the proposed allocation of the insurance proceeds. The Contractor shall have 14 days from receipt of notice to object to the proposed settlement or allocation of the proceeds. If the Contractor does not object, the Owner shall settle the loss and the Contractor shall be bound by the settlement and allocation. Upon receipt, the Owner shall deposit the insurance proceeds in a separate account and make the appropriate distributions. Thereafter, if no other agreement is made or the Owner does not terminate the Contract for convenience, the Owner and Contractor shall execute a Change Order for reconstruction of the damaged or destroyed Work in the amount allocated for that purpose. If the Contractor timely objects to either the terms of the proposed settlement or the allocation of the proceeds, the Owner may proceed to settle the insured loss, and any dispute between the Owner and Contractor arising out of the settlement or allocation of the proceeds shall be resolved pursuant to Article 15. Pending resolution of any dispute, the Owner may issue a Construction Change Directive for the reconstruction of the damaged or destroyed Work.

ARTICLE 12 UNCOVERING AND CORRECTION OF WORK

§ 12.1 Uncovering of Work

§ 12.1.1 If a portion of the Work is covered contrary to the Architect's request or to requirements specifically expressed in the Contract Documents, it must, if requested in writing by the Architect, be uncovered for the Architect's examination and be replaced at the Contractor's expense without change in the Contract Time.

§ 12.1.2 If a portion of the Work has been covered that the Architect has not specifically requested to examine prior to its being covered, the Architect may request to see such Work and it shall be uncovered by the Contractor. If such Work is in accordance with the Contract Documents, the Contractor shall be entitled to an equitable adjustment to the Contract Sum and Contract Time as may be appropriate. If such Work is not in accordance with the Contract Documents, the costs of uncovering the Work, and the cost of correction, shall be at the Contractor's expense.

§ 12.2 Correction of Work

§ 12.2.1 Before Substantial Completion

The Contractor shall promptly correct Work rejected by the Architect or failing to conform to the requirements of the Contract Documents, discovered before Substantial Completion and whether or not fabricated, installed or completed. Costs of correcting such rejected Work, including additional testing and inspections, the cost of uncovering and replacement, and compensation for the Architect's services and expenses made necessary thereby, shall be at the Contractor's expense.

§ 12.2.2 After Substantial Completion

§ 12.2.2.1 In addition to the Contractor's obligations under Section 3.5, if, within one year after the date of Substantial Completion of the Work or designated portion thereof or after the date for commencement of warranties established under Section 9.9.1, or by terms of any applicable special warranty required by the Contract Documents, any of the Work is found to be not in accordance with the requirements of the Contract Documents, the Contractor shall correct it promptly after receipt of notice from the Owner to do so, unless the Owner has previously given the Contractor a written acceptance of such condition. The Owner shall give such notice promptly after discovery of the condition. During the one-year period for correction of Work, if the Owner fails to notify the Contractor and give the Contractor an opportunity to make the correction, the Owner waives the rights to require correction by the Contractor and to make a claim for breach of warranty. If the Contractor fails to correct nonconforming Work within a reasonable time during that period after receipt of notice from the Owner or Architect, the Owner may correct it in accordance with Section 2.5.

AIA Document A201® – 2017. Copyright © 1911, 1915, 1918, 1925, 1937, 1951, 1958, 1961, 1963, 1966, 1970, 1976, 1987, 1997, 2007 and 2017 by The American Institute of Architects. All rights reserved. The "American Institute of Architects," "AIA," the AIA Logo, "A201," and "AIA Contract Documents" are registered trademarks and may not be used without permission. This document was produced by AIA software at 12:13:54 ET on 05/05/2021 under Order No.4897197182 which expires on 06/18/2021, is not for resale, is licensed for one-time use only, and may only be used in accordance with the AIA Contract Documents® Terms of Service. To report copyright violations, e-mail copyright@aia.org.
User Notes: (1416637268)

§ 12.2.2.2 The one-year period for correction of Work shall be extended with respect to portions of Work first performed after Substantial Completion by the period of time between Substantial Completion and the actual completion of that portion of the Work.

§ 12.2.2.3 The one-year period for correction of Work shall not be extended by corrective Work performed by the Contractor pursuant to this Section 12.2.

§ 12.2.3 The Contractor shall remove from the site portions of the Work that are not in accordance with the requirements of the Contract Documents and are neither corrected by the Contractor nor accepted by the Owner.

§ 12.2.4 The Contractor shall bear the cost of correcting destroyed or damaged construction of the Owner or Separate Contractors, whether completed or partially completed, caused by the Contractor's correction or removal of Work that is not in accordance with the requirements of the Contract Documents.

§ 12.2.5 Nothing contained in this Section 12.2 shall be construed to establish a period of limitation with respect to other obligations the Contractor has under the Contract Documents. Establishment of the one-year period for correction of Work as described in Section 12.2.2 relates only to the specific obligation of the Contractor to correct the Work, and has no relationship to the time within which the obligation to comply with the Contract Documents may be sought to be enforced, nor to the time within which proceedings may be commenced to establish the Contractor's liability with respect to the Contractor's obligations other than specifically to correct the Work.

§ 12.3 Acceptance of Nonconforming Work

If the Owner prefers to accept Work that is not in accordance with the requirements of the Contract Documents, the Owner may do so instead of requiring its removal and correction, in which case the Contract Sum will be reduced as appropriate and equitable. Such adjustment shall be effected whether or not final payment has been made.

ARTICLE 13 MISCELLANEOUS PROVISIONS

§ 13.1 Governing Law

The Contract shall be governed by the law of the place where the Project is located, excluding that jurisdiction's choice of law rules. If the parties have selected arbitration as the method of binding dispute resolution, the Federal Arbitration Act shall govern Section 15.4.

§ 13.2 Successors and Assigns

§ 13.2.1 The Owner and Contractor respectively bind themselves, their partners, successors, assigns, and legal representatives to covenants, agreements, and obligations contained in the Contract Documents. Except as provided in Section 13.2.2, neither party to the Contract shall assign the Contract as a whole without written consent of the other. If either party attempts to make an assignment without such consent, that party shall nevertheless remain legally responsible for all obligations under the Contract.

§ 13.2.2 The Owner may, without consent of the Contractor, assign the Contract to a lender providing construction financing for the Project, if the lender assumes the Owner's rights and obligations under the Contract Documents. The Contractor shall execute all consents reasonably required to facilitate the assignment.

§ 13.3 Rights and Remedies

§ 13.3.1 Duties and obligations imposed by the Contract Documents and rights and remedies available thereunder shall be in addition to and not a limitation of duties, obligations, rights, and remedies otherwise imposed or available by law.

§ 13.3.2 No action or failure to act by the Owner, Architect, or Contractor shall constitute a waiver of a right or duty afforded them under the Contract, nor shall such action or failure to act constitute approval of or acquiescence in a breach thereunder, except as may be specifically agreed upon in writing.

§ 13.4 Tests and Inspections

§ 13.4.1 Tests, inspections, and approvals of portions of the Work shall be made as required by the Contract Documents and by applicable laws, statutes, ordinances, codes, rules, and regulations or lawful orders of public authorities. Unless otherwise provided, the Contractor shall make arrangements for such tests, inspections, and

AIA Document A201® – 2017. Copyright © 1911, 1915, 1918, 1925, 1937, 1951, 1958, 1961, 1963, 1966, 1970, 1976, 1987, 1997, 2007 and 2017 by The American Institute of Architects. All rights reserved. The "American Institute of Architects," "AIA," the AIA Logo, "A201," and "AIA Contract Documents" are registered trademarks and may not be used without permission. This document was produced by AIA software at 12:13:54 ET on 05/05/2021 under Order No.4897197182 which expires on 06/18/2021, is not for resale, is licensed for one-time use only, and may only be used in accordance with the AIA Contract Documents® Terms of Service. To report copyright violations, e-mail copyright@aia.org.
User Notes: (1416637268)

approvals with an independent testing laboratory or entity acceptable to the Owner, or with the appropriate public authority, and shall bear all related costs of tests, inspections, and approvals. The Contractor shall give the Architect timely notice of when and where tests and inspections are to be made so that the Architect may be present for such procedures. The Owner shall bear costs of tests, inspections, or approvals that do not become requirements until after bids are received or negotiations concluded. The Owner shall directly arrange and pay for tests, inspections, or approvals where building codes or applicable laws or regulations so require.

§ 13.4.2 If the Architect, Owner, or public authorities having jurisdiction determine that portions of the Work require additional testing, inspection, or approval not included under Section 13.4.1, the Architect will, upon written authorization from the Owner, instruct the Contractor to make arrangements for such additional testing, inspection, or approval, by an entity acceptable to the Owner, and the Contractor shall give timely notice to the Architect of when and where tests and inspections are to be made so that the Architect may be present for such procedures. Such costs, except as provided in Section 13.4.3, shall be at the Owner's expense.

§ 13.4.3 If procedures for testing, inspection, or approval under Sections 13.4.1 and 13.4.2 reveal failure of the portions of the Work to comply with requirements established by the Contract Documents, all costs made necessary by such failure, including those of repeated procedures and compensation for the Architect's services and expenses, shall be at the Contractor's expense.

§ 13.4.4 Required certificates of testing, inspection, or approval shall, unless otherwise required by the Contract Documents, be secured by the Contractor and promptly delivered to the Architect.

§ 13.4.5 If the Architect is to observe tests, inspections, or approvals required by the Contract Documents, the Architect will do so promptly and, where practicable, at the normal place of testing.

§ 13.4.6 Tests or inspections conducted pursuant to the Contract Documents shall be made promptly to avoid unreasonable delay in the Work.

§ 13.5 Interest

Payments due and unpaid under the Contract Documents shall bear interest from the date payment is due at the rate the parties agree upon in writing or, in the absence thereof, at the legal rate prevailing from time to time at the place where the Project is located.

ARTICLE 14 TERMINATION OR SUSPENSION OF THE CONTRACT

§ 14.1 Termination by the Contractor

§ 14.1.1 The Contractor may terminate the Contract if the Work is stopped for a period of 30 consecutive days through no act or fault of the Contractor, a Subcontractor, a Sub-subcontractor, their agents or employees, or any other persons or entities performing portions of the Work, for any of the following reasons:

- **.1** Issuance of an order of a court or other public authority having jurisdiction that requires all Work to be stopped;
- **.2** An act of government, such as a declaration of national emergency, that requires all Work to be stopped;
- **.3** Because the Architect has not issued a Certificate for Payment and has not notified the Contractor of the reason for withholding certification as provided in Section 9.4.1, or because the Owner has not made payment on a Certificate for Payment within the time stated in the Contract Documents; or
- **.4** The Owner has failed to furnish to the Contractor reasonable evidence as required by Section 2.2.

§ 14.1.2 The Contractor may terminate the Contract if, through no act or fault of the Contractor, a Subcontractor, a Sub-subcontractor, their agents or employees, or any other persons or entities performing portions of the Work, repeated suspensions, delays, or interruptions of the entire Work by the Owner as described in Section 14.3, constitute in the aggregate more than 100 percent of the total number of days scheduled for completion, or 120 days in any 365-day period, whichever is less.

§ 14.1.3 If one of the reasons described in Section 14.1.1 or 14.1.2 exists, the Contractor may, upon seven days' notice to the Owner and Architect, terminate the Contract and recover from the Owner payment for Work executed, as well as reasonable overhead and profit on Work not executed, and costs incurred by reason of such termination.

AIA Document A201® – 2017. Copyright © 1911, 1915, 1918, 1925, 1937, 1951, 1958, 1961, 1963, 1966, 1970, 1976, 1987, 1997, 2007 and 2017 by The American Institute of Architects. All rights reserved. The "American Institute of Architects," "AIA," the AIA Logo, "A201," and "AIA Contract Documents" are registered trademarks and may not be used without permission. This document was produced by AIA software at 12:13:54 ET on 05/05/2021 under Order No.4897197182 which expires on 06/18/2021, is not for resale, is licensed for one-time use only, and may only be used in accordance with the AIA Contract Documents® Terms of Service. To report copyright violations, e-mail copyright@aia.org.
User Notes: (1416637268)

§ 14.1.4 If the Work is stopped for a period of 60 consecutive days through no act or fault of the Contractor, a Subcontractor, a Sub-subcontractor, or their agents or employees or any other persons or entities performing portions of the Work because the Owner has repeatedly failed to fulfill the Owner's obligations under the Contract Documents with respect to matters important to the progress of the Work, the Contractor may, upon seven additional days' notice to the Owner and the Architect, terminate the Contract and recover from the Owner as provided in Section 14.1.3.

§ 14.2 Termination by the Owner for Cause

§ 14.2.1 The Owner may terminate the Contract if the Contractor

- **.1** repeatedly refuses or fails to supply enough properly skilled workers or proper materials;
- **.2** fails to make payment to Subcontractors or suppliers in accordance with the respective agreements between the Contractor and the Subcontractors or suppliers;
- **.3** repeatedly disregards applicable laws, statutes, ordinances, codes, rules and regulations, or lawful orders of a public authority; or
- **.4** otherwise is guilty of substantial breach of a provision of the Contract Documents.

§ 14.2.2 When any of the reasons described in Section 14.2.1 exist, and upon certification by the Architect that sufficient cause exists to justify such action, the Owner may, without prejudice to any other rights or remedies of the Owner and after giving the Contractor and the Contractor's surety, if any, seven days' notice, terminate employment of the Contractor and may, subject to any prior rights of the surety:

- **.1** Exclude the Contractor from the site and take possession of all materials, equipment, tools, and construction equipment and machinery thereon owned by the Contractor;
- **.2** Accept assignment of subcontracts pursuant to Section 5.4; and
- **.3** Finish the Work by whatever reasonable method the Owner may deem expedient. Upon written request of the Contractor, the Owner shall furnish to the Contractor a detailed accounting of the costs incurred by the Owner in finishing the Work.

§ 14.2.3 When the Owner terminates the Contract for one of the reasons stated in Section 14.2.1, the Contractor shall not be entitled to receive further payment until the Work is finished.

§ 14.2.4 If the unpaid balance of the Contract Sum exceeds costs of finishing the Work, including compensation for the Architect's services and expenses made necessary thereby, and other damages incurred by the Owner and not expressly waived, such excess shall be paid to the Contractor. If such costs and damages exceed the unpaid balance, the Contractor shall pay the difference to the Owner. The amount to be paid to the Contractor or Owner, as the case may be, shall be certified by the Initial Decision Maker, upon application, and this obligation for payment shall survive termination of the Contract.

§ 14.3 Suspension by the Owner for Convenience

§ 14.3.1 The Owner may, without cause, order the Contractor in writing to suspend, delay or interrupt the Work, in whole or in part for such period of time as the Owner may determine.

§ 14.3.2 The Contract Sum and Contract Time shall be adjusted for increases in the cost and time caused by suspension, delay, or interruption under Section 14.3.1. Adjustment of the Contract Sum shall include profit. No adjustment shall be made to the extent

- **.1** that performance is, was, or would have been, so suspended, delayed, or interrupted, by another cause for which the Contractor is responsible; or
- **.2** that an equitable adjustment is made or denied under another provision of the Contract.

§ 14.4 Termination by the Owner for Convenience

§ 14.4.1 The Owner may, at any time, terminate the Contract for the Owner's convenience and without cause.

§ 14.4.2 Upon receipt of notice from the Owner of such termination for the Owner's convenience, the Contractor shall

- **.1** cease operations as directed by the Owner in the notice;
- **.2** take actions necessary, or that the Owner may direct, for the protection and preservation of the Work; and
- **.3** except for Work directed to be performed prior to the effective date of termination stated in the notice, terminate all existing subcontracts and purchase orders and enter into no further subcontracts and purchase orders.

AIA Document A201® – 2017. Copyright © 1911, 1915, 1918, 1925, 1937, 1951, 1958, 1961, 1963, 1966, 1970, 1976, 1987, 1997, 2007 and 2017 by The American Institute of Architects. All rights reserved. The "American Institute of Architects," "AIA," the AIA Logo, "A201," and "AIA Contract Documents" are registered trademarks and may not be used without permission. This document was produced by AIA software at 12:13:54 ET on 05/05/2021 under Order No.4897197182 which expires on 06/18/2021, is not for resale, is licensed for one-time use only, and may only be used in accordance with the AIA Contract Documents® Terms of Service. To report copyright violations, e-mail copyright@aia.org.
User Notes: (1416637268)

§ 14.4.3 In case of such termination for the Owner's convenience, the Owner shall pay the Contractor for Work properly executed; costs incurred by reason of the termination, including costs attributable to termination of Subcontracts; and the termination fee, if any, set forth in the Agreement.

ARTICLE 15 CLAIMS AND DISPUTES

§ 15.1 Claims

§ 15.1.1 Definition

A Claim is a demand or assertion by one of the parties seeking, as a matter of right, payment of money, a change in the Contract Time, or other relief with respect to the terms of the Contract. The term "Claim" also includes other disputes and matters in question between the Owner and Contractor arising out of or relating to the Contract. The responsibility to substantiate Claims shall rest with the party making the Claim. This Section 15.1.1 does not require the Owner to file a Claim in order to impose liquidated damages in accordance with the Contract Documents.

§ 15.1.2 Time Limits on Claims

The Owner and Contractor shall commence all Claims and causes of action against the other and arising out of or related to the Contract, whether in contract, tort, breach of warranty or otherwise, in accordance with the requirements of the binding dispute resolution method selected in the Agreement and within the period specified by applicable law, but in any case not more than 10 years after the date of Substantial Completion of the Work. The Owner and Contractor waive all Claims and causes of action not commenced in accordance with this Section 15.1.2.

§ 15.1.3 Notice of Claims

§ 15.1.3.1 Claims by either the Owner or Contractor, where the condition giving rise to the Claim is first discovered prior to expiration of the period for correction of the Work set forth in Section 12.2.2, shall be initiated by notice to the other party and to the Initial Decision Maker with a copy sent to the Architect, if the Architect is not serving as the Initial Decision Maker. Claims by either party under this Section 15.1.3.1 shall be initiated within 21 days after occurrence of the event giving rise to such Claim or within 21 days after the claimant first recognizes the condition giving rise to the Claim, whichever is later.

§ 15.1.3.2 Claims by either the Owner or Contractor, where the condition giving rise to the Claim is first discovered after expiration of the period for correction of the Work set forth in Section 12.2.2, shall be initiated by notice to the other party. In such event, no decision by the Initial Decision Maker is required.

§ 15.1.4 Continuing Contract Performance

§ 15.1.4.1 Pending final resolution of a Claim, except as otherwise agreed in writing or as provided in Section 9.7 and Article 14, the Contractor shall proceed diligently with performance of the Contract and the Owner shall continue to make payments in accordance with the Contract Documents.

§ 15.1.4.2 The Contract Sum and Contract Time shall be adjusted in accordance with the Initial Decision Maker's decision, subject to the right of either party to proceed in accordance with this Article 15. The Architect will issue Certificates for Payment in accordance with the decision of the Initial Decision Maker.

§ 15.1.5 Claims for Additional Cost

If the Contractor wishes to make a Claim for an increase in the Contract Sum, notice as provided in Section 15.1.3 shall be given before proceeding to execute the portion of the Work that is the subject of the Claim. Prior notice is not required for Claims relating to an emergency endangering life or property arising under Section 10.4.

§ 15.1.6 Claims for Additional Time

§ 15.1.6.1 If the Contractor wishes to make a Claim for an increase in the Contract Time, notice as provided in Section 15.1.3 shall be given. The Contractor's Claim shall include an estimate of cost and of probable effect of delay on progress of the Work. In the case of a continuing delay, only one Claim is necessary.

§ 15.1.6.2 If adverse weather conditions are the basis for a Claim for additional time, such Claim shall be documented by data substantiating that weather conditions were abnormal for the period of time, could not have been reasonably anticipated, and had an adverse effect on the scheduled construction.

AIA Document A201® – 2017. Copyright © 1911, 1915, 1918, 1925, 1937, 1951, 1958, 1961, 1963, 1966, 1970, 1976, 1987, 1997, 2007 and 2017 by The American Institute of Architects. All rights reserved. The "American Institute of Architects," "AIA," the AIA Logo, "A201," and "AIA Contract Documents" are registered trademarks and may not be used without permission. This document was produced by AIA software at 12:13:54 ET on 05/05/2021 under Order No.4897197182 which expires on 06/18/2021, is not for resale, is licensed for one-time use only, and may only be used in accordance with the AIA Contract Documents® Terms of Service. To report copyright violations, e-mail copyright@aia.org.
User Notes: (1416637268)

§ 15.1.7 Waiver of Claims for Consequential Damages
The Contractor and Owner waive Claims against each other for consequential damages arising out of or relating to this Contract. This mutual waiver includes

.1 damages incurred by the Owner for rental expenses, for losses of use, income, profit, financing, business and reputation, and for loss of management or employee productivity or of the services of such persons; and

.2 damages incurred by the Contractor for principal office expenses including the compensation of personnel stationed there, for losses of financing, business and reputation, and for loss of profit, except anticipated profit arising directly from the Work.

This mutual waiver is applicable, without limitation, to all consequential damages due to either party's termination in accordance with Article 14. Nothing contained in this Section 15.1.7 shall be deemed to preclude assessment of liquidated damages, when applicable, in accordance with the requirements of the Contract Documents.

§ 15.2 Initial Decision
§ 15.2.1 Claims, excluding those where the condition giving rise to the Claim is first discovered after expiration of the period for correction of the Work set forth in Section 12.2.2 or arising under Sections 10.3, 10.4, and 11.5, shall be referred to the Initial Decision Maker for initial decision. The Architect will serve as the Initial Decision Maker, unless otherwise indicated in the Agreement. Except for those Claims excluded by this Section 15.2.1, an initial decision shall be required as a condition precedent to mediation of any Claim. If an initial decision has not been rendered within 30 days after the Claim has been referred to the Initial Decision Maker, the party asserting the Claim may demand mediation and binding dispute resolution without a decision having been rendered. Unless the Initial Decision Maker and all affected parties agree, the Initial Decision Maker will not decide disputes between the Contractor and persons or entities other than the Owner.

§ 15.2.2 The Initial Decision Maker will review Claims and within ten days of the receipt of a Claim take one or more of the following actions: (1) request additional supporting data from the claimant or a response with supporting data from the other party, (2) reject the Claim in whole or in part, (3) approve the Claim, (4) suggest a compromise, or (5) advise the parties that the Initial Decision Maker is unable to resolve the Claim if the Initial Decision Maker lacks sufficient information to evaluate the merits of the Claim or if the Initial Decision Maker concludes that, in the Initial Decision Maker's sole discretion, it would be inappropriate for the Initial Decision Maker to resolve the Claim.

§ 15.2.3 In evaluating Claims, the Initial Decision Maker may, but shall not be obligated to, consult with or seek information from either party or from persons with special knowledge or expertise who may assist the Initial Decision Maker in rendering a decision. The Initial Decision Maker may request the Owner to authorize retention of such persons at the Owner's expense.

§ 15.2.4 If the Initial Decision Maker requests a party to provide a response to a Claim or to furnish additional supporting data, such party shall respond, within ten days after receipt of the request, and shall either (1) provide a response on the requested supporting data, (2) advise the Initial Decision Maker when the response or supporting data will be furnished, or (3) advise the Initial Decision Maker that no supporting data will be furnished. Upon receipt of the response or supporting data, if any, the Initial Decision Maker will either reject or approve the Claim in whole or in part.

§ 15.2.5 The Initial Decision Maker will render an initial decision approving or rejecting the Claim, or indicating that the Initial Decision Maker is unable to resolve the Claim. This initial decision shall (1) be in writing; (2) state the reasons therefor; and (3) notify the parties and the Architect, if the Architect is not serving as the Initial Decision Maker, of any change in the Contract Sum or Contract Time or both. The initial decision shall be final and binding on the parties but subject to mediation and, if the parties fail to resolve their dispute through mediation, to binding dispute resolution.

§ 15.2.6 Either party may file for mediation of an initial decision at any time, subject to the terms of Section 15.2.6.1.

§ 15.2.6.1 Either party may, within 30 days from the date of receipt of an initial decision, demand in writing that the other party file for mediation. If such a demand is made and the party receiving the demand fails to file for mediation within 30 days after receipt thereof, then both parties waive their rights to mediate or pursue binding dispute resolution proceedings with respect to the initial decision.

AIA Document A201® – 2017. Copyright © 1911, 1915, 1918, 1925, 1937, 1951, 1958, 1961, 1963, 1966, 1970, 1976, 1987, 1997, 2007 and 2017 by The American Institute of Architects. All rights reserved. The "American Institute of Architects," "AIA," the AIA Logo, "A201," and "AIA Contract Documents" are registered trademarks and may not be used without permission. This document was produced by AIA software at 12:13:54 ET on 05/05/2021 under Order No.4897197182 which expires on 06/18/2021, is not for resale, is licensed for one-time use only, and may only be used in accordance with the AIA Contract Documents® Terms of Service. To report copyright violations, e-mail copyright@aia.org.
User Notes: (1416637268)

§ 15.2.7 In the event of a Claim against the Contractor, the Owner may, but is not obligated to, notify the surety, if any, of the nature and amount of the Claim. If the Claim relates to a possibility of a Contractor's default, the Owner may, but is not obligated to, notify the surety and request the surety's assistance in resolving the controversy.

§ 15.2.8 If a Claim relates to or is the subject of a mechanic's lien, the party asserting such Claim may proceed in accordance with applicable law to comply with the lien notice or filing deadlines.

§ 15.3 Mediation

§ 15.3.1 Claims, disputes, or other matters in controversy arising out of or related to the Contract, except those waived as provided for in Sections 9.10.4, 9.10.5, and 15.1.7, shall be subject to mediation as a condition precedent to binding dispute resolution.

§ 15.3.2 The parties shall endeavor to resolve their Claims by mediation which, unless the parties mutually agree otherwise, shall be administered by the American Arbitration Association in accordance with its Construction Industry Mediation Procedures in effect on the date of the Agreement. A request for mediation shall be made in writing, delivered to the other party to the Contract, and filed with the person or entity administering the mediation. The request may be made concurrently with the filing of binding dispute resolution proceedings but, in such event, mediation shall proceed in advance of binding dispute resolution proceedings, which shall be stayed pending mediation for a period of 60 days from the date of filing, unless stayed for a longer period by agreement of the parties or court order. If an arbitration is stayed pursuant to this Section 15.3.2, the parties may nonetheless proceed to the selection of the arbitrator(s) and agree upon a schedule for later proceedings.

§ 15.3.3 Either party may, within 30 days from the date that mediation has been concluded without resolution of the dispute or 60 days after mediation has been demanded without resolution of the dispute, demand in writing that the other party file for binding dispute resolution. If such a demand is made and the party receiving the demand fails to file for binding dispute resolution within 60 days after receipt thereof, then both parties waive their rights to binding dispute resolution proceedings with respect to the initial decision.

§ 15.3.4 The parties shall share the mediator's fee and any filing fees equally. The mediation shall be held in the place where the Project is located, unless another location is mutually agreed upon. Agreements reached in mediation shall be enforceable as settlement agreements in any court having jurisdiction thereof.

§ 15.4 Arbitration

§ 15.4.1 If the parties have selected arbitration as the method for binding dispute resolution in the Agreement, any Claim subject to, but not resolved by, mediation shall be subject to arbitration which, unless the parties mutually agree otherwise, shall be administered by the American Arbitration Association in accordance with its Construction Industry Arbitration Rules in effect on the date of the Agreement. The Arbitration shall be conducted in the place where the Project is located, unless another location is mutually agreed upon. A demand for arbitration shall be made in writing, delivered to the other party to the Contract, and filed with the person or entity administering the arbitration. The party filing a notice of demand for arbitration must assert in the demand all Claims then known to that party on which arbitration is permitted to be demanded.

§ 15.4.1.1 A demand for arbitration shall be made no earlier than concurrently with the filing of a request for mediation, but in no event shall it be made after the date when the institution of legal or equitable proceedings based on the Claim would be barred by the applicable statute of limitations. For statute of limitations purposes, receipt of a written demand for arbitration by the person or entity administering the arbitration shall constitute the institution of legal or equitable proceedings based on the Claim.

§ 15.4.2 The award rendered by the arbitrator or arbitrators shall be final, and judgment may be entered upon it in accordance with applicable law in any court having jurisdiction thereof.

§ 15.4.3 The foregoing agreement to arbitrate and other agreements to arbitrate with an additional person or entity duly consented to by parties to the Agreement, shall be specifically enforceable under applicable law in any court having jurisdiction thereof.

AIA Document A201® – 2017. Copyright © 1911, 1915, 1918, 1925, 1937, 1951, 1958, 1961, 1963, 1966, 1970, 1976, 1987, 1997, 2007 and 2017 by The American Institute of Architects. All rights reserved. The "American Institute of Architects," "AIA," the AIA Logo, "A201," and "AIA Contract Documents" are registered trademarks and may not be used without permission. This document was produced by AIA software at 12:13:54 ET on 05/05/2021 under Order No.4897197182 which expires on 06/18/2021, is not for resale, is licensed for one-time use only, and may only be used in accordance with the AIA Contract Documents® Terms of Service. To report copyright violations, e-mail copyright@aia.org.
User Notes: (1416637268)

§ 15.4.4 Consolidation or Joinder

§ 15.4.4.1 Subject to the rules of the American Arbitration Association or other applicable arbitration rules, either party may consolidate an arbitration conducted under this Agreement with any other arbitration to which it is a party provided that (1) the arbitration agreement governing the other arbitration permits consolidation, (2) the arbitrations to be consolidated substantially involve common questions of law or fact, and (3) the arbitrations employ materially similar procedural rules and methods for selecting arbitrator(s).

§ 15.4.4.2 Subject to the rules of the American Arbitration Association or other applicable arbitration rules, either party may include by joinder persons or entities substantially involved in a common question of law or fact whose presence is required if complete relief is to be accorded in arbitration, provided that the party sought to be joined consents in writing to such joinder. Consent to arbitration involving an additional person or entity shall not constitute consent to arbitration of any claim, dispute or other matter in question not described in the written consent.

§ 15.4.4.3 The Owner and Contractor grant to any person or entity made a party to an arbitration conducted under this Section 15.4, whether by joinder or consolidation, the same rights of joinder and consolidation as those of the Owner and Contractor under this Agreement.

AIA Document A201® – 2017. Copyright © 1911, 1915, 1918, 1925, 1937, 1951, 1958, 1961, 1963, 1966, 1970, 1976, 1987, 1997, 2007 and 2017 by The American Institute of Architects. All rights reserved. The "American Institute of Architects," "AIA," the AIA Logo, "A201," and "AIA Contract Documents" are registered trademarks and may not be used without permission. This document was produced by AIA software at 12:13:54 ET on 05/05/2021 under Order No.4897197182 which expires on 06/18/2021, is not for resale, is licensed for one-time use only, and may only be used in accordance with the AIA Contract Documents® Terms of Service. To report copyright violations, e-mail copyright@aia.org.
User Notes: (1416637268)

LOUISIANA UNIFORM PUBLIC WORK BID FORM

TO: _____ **BID FOR:** _____

_____ _____

_____ _____

_____ _____

(Owner to provide name and address of owner) (*Owner to provide name of project and other identifying information)*

The undersigned bidder hereby declares and represents that she/he: a) has carefully examined and understands the Bidding Documents, b) has not received, relied on, or based his bid on any verbal instructions contrary to the Bidding Documents or any addenda, c) has personally inspected and is familiar with the project site, and hereby proposes to provide all labor, materials, tools, appliances and facilities as required to perform, in a workmanlike manner, all work and services for the construction and completion of the referenced project, all in strict accordance with the Bidding Documents prepared by:_____ _____ and dated: _____

(Owner to provide name of entity preparing bidding documents.)

Bidders must acknowledge all addenda. The Bidder acknowledges receipt of the following **ADDENDA:** (Enter the number the Designer has assigned to each of the addenda that the Bidder is acknowledging) _____ **.**

TOTAL BASE BID: For all work required by the Bidding Documents (including any and all unit prices designated "Base Bid" * but not alternates) the sum of:

_____Dollars ($ _____)

ALTERNATES: For any and all work required by the Bidding Documents for Alternates including any and all unit prices designated as alternates in the unit price description.

Alternate No. 1 *(Owner to provide description of alternate and state whether add or deduct)* for the lump sum of:

_____Dollars ($ _____)

Alternate No. 2 *(Owner to provide description of alternate and state whether add or deduct)* for the lump sum of:

_____Dollars ($ _____)

Alternate No. 3 *(Owner to provide description of alternate and state whether add or deduct)* for the lump sum of:

_____Dollars ($_____)

NAME OF BIDDER: _____

ADDRESS OF BIDDER:_____

_____

LOUISIANA CONTRACTOR'S LICENSE NUMBER: _____

NAME OF AUTHORIZED SIGNATORY OF BIDDER: _____

TITLE OF AUTHORIZED SIGNATORY OF BIDDER: _____

SIGNATURE OF AUTHORIZED SIGNATORY OF BIDDER **: _____

DATE: _____

<u>THE FOLLOWING ITEMS ARE TO BE INCLUDED WITH THE SUBMISSION OF THIS LOUISIANA UNIFORM PUBLIC WORK BID FORM</u>:

* The <u>Unit Price Form</u> shall be used if the contract includes unit prices. Otherwise it is not required and need not be included with the form. The number of unit prices that may be included is not limited and additional sheets may be included if needed.

**** A CORPORATE RESOLUTION OR WRITTEN EVIDENCE** of the authority of the person signing the bid for the public work as prescribed by LA R.S. 38:2212(B)(5).

BID SECURITY in the form of a bid bond, certified check or cashier's check as prescribed by LA R.S. 38:2218(A) attached to and made a part of this bid.

LOUISIANA UNIFORM PUBLIC WORK BID FORM

UNIT PRICE FORM

TO: _____

(Owner to provide name and address of owner)

BID FOR: _____

(Owner to provide name of project and other identifying information)

UNIT PRICES: This form shall be used for any and all work required by the Bidding Documents and described as unit prices. Amounts shall be stated in figures and only in figures.

DESCRIPTION:	❑ Base Bid or ❑ Alt.# ___			
REF. NO.	QUANTITY:	UNIT OF MEASURE:	UNIT PRICE	UNIT PRICE EXTENSION *(Quantity times Unit Price)*

DESCRIPTION:	❑ Base Bid or ❑ Alt.# ___			
REF. NO.	QUANTITY:	UNIT OF MEASURE:	UNIT PRICE	UNIT PRICE EXTENSION *(Quantity times Unit Price)*

DESCRIPTION:	❑ Base Bid or ❑ Alt.# ___			
REF. NO.	QUANTITY:	UNIT OF MEASURE:	UNIT PRICE	UNIT PRICE EXTENSION *(Quantity times Unit Price)*

DESCRIPTION:	❑ Base Bid or ❑ Alt.# ___			
REF. NO.	QUANTITY:	UNIT OF MEASURE:	UNIT PRICE	UNIT PRICE EXTENSION *(Quantity times Unit Price)*

DESCRIPTION:	❑ Base Bid or ❑ Alt.# ___			
REF. NO.	QUANTITY:	UNIT OF MEASURE:	UNIT PRICE	UNIT PRICE EXTENSION *(Quantity times Unit Price)*

DESCRIPTION:	❑ Base Bid or ❑ Alt.# ___			
REF. NO.	QUANTITY:	UNIT OF MEASURE:	UNIT PRICE	UNIT PRICE EXTENSION *(Quantity times Unit Price)*

DESCRIPTION:	❑ Base Bid or ❑ Alt.# ___			
REF. NO.	QUANTITY:	UNIT OF MEASURE:	UNIT PRICE	UNIT PRICE EXTENSION *(Quantity times Unit Price)*

DESCRIPTION:	❑ Base Bid or ❑ Alt.# ___			
REF. NO.	QUANTITY:	UNIT OF MEASURE:	UNIT PRICE	UNIT PRICE EXTENSION *(Quantity times Unit Price)*

DESCRIPTION:	❑ Base Bid or ❑ Alt.# ___			
REF. NO.	QUANTITY:	UNIT OF MEASURE:	UNIT PRICE	UNIT PRICE EXTENSION *(Quantity times Unit Price)*

Wording for "DESCRIPTION" is to be provided by the Owner.
All quantities are estimated. The contractor will be paid based upon actual quantities as verified by the Owner.

TECHNICAL SPECIFICATIONS TABLE OF CONTENTS

DIVISION 00 - PROCUREMENT AND CONTRACTING REQUIREMENTS

SECTION 00 60 00 - PROJECT FORMS:

- PRIOR APPROVAL REQUEST
- ELECTRONIC DOCUMENT REQUEST
- ROOF GUARANTEE FORMS (STATE OF LOUISIANA)

DIVISION 01 - GENERAL REQUIREMENTS

SECTION 01 10 00 – SUMMARY
SECTION 01 23 00 - ALTERNATES
SECTION 01 26 00 - CONTRACT MODIFICATION PROCEDURES
SECTION 01 29 00 - PAYMENT PROCEDURES
SECTION 01 31 00 - PROJECT MANAGEMENT AND COORDINATION
SECTION 01 32 00 - CONSTRUCTION PROGRESS DOCUMENTATION
SECTION 01 32 33 - PHOTOGRAPHIC DOCUMENTATION
SECTION 01 33 00 - SUBMITTAL PROCEDURES
SECTION 01 40 00 - QUALITY REQUIREMENTS
SECTION 01 42 00 – REFERENCES
SECTION 01 43 39 - MOCKUPS
SECTION 01 50 00 - TEMPORARY FACILITIES AND CONTROLS
SECTION 01 60 00 - PRODUCT REQUIREMENTS
SECTION 01 73 00 - EXECUTION
SECTION 01 74 19 - CONSTRUCTION WASTE MANAGEMENT AND DISPOSAL
SECTION 01 77 00 - CLOSEOUT PROCEDURES
SECTION 01 78 23 - OPERATION AND MAINTENANCE DATA
SECTION 01 78 39 - PROJECT RECORD DOCUMENTS
SECTION 01 79 00 - DEMONSTRATION AND TRAINING

DIVISION 02 - EXISTING CONDITIONS

SECTION 02 41 19 - SELECTIVE DEMOLITION

DIVISION 05 - METALS

SECTION 05 55 00 – METAL FABRICATIONS

DIVISION 07 - THERMAL AND MOISTURE PROTECTION

SECTION 07 01 50.19 – PREPARATION FOR REROOFING
SECTION 07 55 00 – MODIFIED BITUMEN MEMBRANE ROOFING
SECTION 07 62 00 – SHEET METAL FLASHING AND TRIM
SECTION 07 70 00 – ROOF ACCESSORIES
SECTION 07 92 00 - JOINT SEALANTS

END OF **TABLE OF CONTENTS**

SECTION 006000 - FORMS

PART 1 - GENERAL

1.1 RELATED DOCUMENTS

A. Drawings and general provisions of the Contract, including General and Supplementary Conditions and other Division 01 Specification Sections, apply to this Section.

1.2 SUMMARY

A. Section Includes:

1. Electronic Documents Request.
2. Prior Approval Request.
3. Roof Guarantee.
4. Roof Checklist.

PART 2 - PRODUCTS (Not Used)

PART 3 - EXECUTION (Not Used)

END OF SECTION **006000**

THIS SHEET INTENTIONALLY BLANK

ELECTRONIC DOCUMENT REQUEST

DATE: _____

CONTRACTOR: _____

PROJECT: _____

PROJECT NO:. _____

Contractor has read and understands Electronic Data Agreement: Yes No

Signed copy of Electronic Data Agreement attached: Yes No

Purpose of Electronic Data Use:

Shop Drawings As-Built Drawings Other

Contractor is requesting an electronic copy of the following files:

Sheet No.	Description

ELECTRONIC DATA AGREEMENT

CONTRACTOR: _____

PROJECT: _____

Holly & Smith Architects is providing electronic files for the contractor's convenience and use in the preparation of shop drawings, bid documents, as-built drawings, or other use as noted on the Electronic Document Request related to the above referenced project, subject to the following terms and conditions:

H/S electronic files were prepared in REVIT 2013 and we make no representation as to the compatibility of these files with your hardware or your software.

Data contained on these electronic files is part of H/S instruments of professional service and shall not be used by the Contractor, or anyone else receiving this data through or from the Contractor, for any purpose other than as a convenience in the preparation of shop drawings, as-built drawings, or other use as noted on the Electronic Document Request for the referenced project. Any other use or reuse by the contractor or by others will be at the contractor's sole risk and without liability or legal exposure to H/S. The contractor agrees to make no claim and hereby waives, to the fullest extent permitted by law, any claim or cause of action of any nature against H/S, its officers, directors, employees, agents, or sub-consultants which may arise out of, or in connection with, the contractor's use of the electronic files.

Furthermore, the contractor shall, to the fullest extent permitted by law, indemnify and hold harmless H/S from all claims, damages, losses, liabilities, and expenses, including attorney's fees and defense costs arising out of or resulting from use of these electronic files.

These electronic files are not Contract Documents. Significant differences may exist between these electronic files and corresponding hard copy contract documents due to addenda, change orders, or other revisions. Additional related work and materials may be shown on other drawings or may be required by the specifications. H/S makes no representation regarding the accuracy, completeness, or suitability of the electronic files received. Drawings may not be drawn to scale. In the event that a conflict arises between the issued contract documents and the electronic files, the issued contract documents shall govern. The contractor is responsible for determining if any conflict exists. By use of these electronic files, the contractor is not relieved of the duty to fully comply with the contract documents, including and without limitation, the need to check, confirm, and coordinate all dimensions and details, take field measurements, verify field conditions, and coordinate work with that of other contractors for the project.

Because of the potential that the information presented on the electronic files can be modified, unintentionally or otherwise, H/S removes its ownership and/or involvement for each electronic display.

Under no circumstances shall delivery of the electronic files for use by you be deemed a sale by H/S, and H/S makes no warranties, either expressed or implied, of merchantability and fitness for any particular purpose. In no event shall H/S be liable for any loss of profit or any consequential damages.

Because data stored in electronic media format can deteriorate or be modified inadvertently, the contractor agrees to perform acceptance tests on the electronic files within 30 days of receipt, after which the contractor shall be deemed to have accepted the data thus transferred. Any data errors detected within the 30-day acceptance period will be corrected by H/S.

Accepted by: _____ Date: _____

_____

Print Name and Company

H/S

PRIOR APPROVAL REQUEST

Project: _____ H/S Project No.: _____

_____ Owner Project No.: _____

From: _____ To: _____

Date: _____

Specification Title: _____ Description: _____

Section: _____ Page: _____ Article/Paragraph: _____

Proposed Product for Prior Approval: _____

Manufacturer: _____ Address: _____ Phone: _____

Trade Name: _____ Model No.: _____

Installer: _____ Address: _____ Phone: _____

History: ☐ New product ☐ 2-5 years old ☐ 5-10 yrs old ☐ More than 10 years old

Differences between proposed product and specified product: _____

_____

_____

☐ Point-by-point comparative data attached - *REQUIRED BY ARCHITECT*

Supporting Data Attached: ☐ Drawings ☐ Product Data ☐ Samples ☐ Tests ☐ Reports ☐ Other

The Undersigned certifies:

- Proposed product has been fully investigated and determined to be equal or superior in all respects to specified product.
- Same warranty will be furnished for proposed product as for specified product.
- Same maintenance service and source of replacement parts, as applicable, is available.
- Proposed product will have no adverse effect on other trades and will not affect or delay progress schedule.
- Cost data as stated above is complete. Claims for additional costs related to accepted substitution which may subsequently become apparent are to be waived.
- Proposed substitution does not affect dimensions and functional clearances.
- Payment will be made for changes to building design, including A/E design, detailing, and construction costs caused by the substitution.
- Coordination, installation, and changes in the Work as necessary for accepted Prior Approved Product will be complete in all respects.

Submitted by: _____ Address: _____

Firm: _____ _____

Signature: _____ Telephone: _____

Attachments: _____

_____

_____

PRIOR APPROVAL REQUEST
(continued)

A/E's REVIEW AND ACTION

☐ Product approved - Make submittals in accordance with Specification Section 01330.
☐ Product approved as noted - Make submittals in accordance with Specification Section 01330.
☐ Product rejected - Use specified materials.
☐ Prior Approval Request received too late - Use specified materials.

Signed by:_____ Date:

Additional Comments: ☐ Contractor ☐ Subcontractor ☐ Supplier ☐ Manufacturer ☐ A/E ☐ _____

ROOFING GUARANTEE R-2

OWNER: UNIVERSITY OF NEW ORLEANS

ADDRESS: OFFICE OF FACILITY SERVICES
HUMAN PERFORMANCE CENTER, ROOM 112
NEW ORLEANS, LOUISIANA 70148-9095

WHEREAS _____

Address _____

Telephone,(____)_____

herein called the "Roofing Contractor", has performed roofing and flashing in accordance with the Contract Documents for Project / Part No. _____, WBS No._____ (hereinafter called the "Work") under a Contract with the Owner.

Name of Project: _____

User Agency: _____

Location/Address: _____

_____

Name and Type of Building(s): _____

_____ Building I.D. _____

Type(s) of Roof Deck(s): _____

_____

Total Roof Area:_____SF; Flashing, Edge:_____LF; Base:_____LF

Date of Acceptance: _____ Guarantee Period: 2 Years

Date of Expiration: _____

AND WHEREAS the Roofing Contractor has contracted to guarantee said work against water entry from faulty or defective materials and workmanship for the designated Guarantee period;

NOW THEREFORE the Roofing Contractor as the General Contractor guarantees, subject to the terms and conditions herein set forth, that during the Guarantee Period he will at his own cost and expense, make or cause to be made with approved procedures and materials such repairs to or replacements of said work resulting from water entry or faults or defects of said Work as are necessary to correct faulty and defective work and as are necessary to maintain said Work in watertight conditions and further to respond on or within

two (2) working days upon written notification of leaks or defects by the Owner/User Agency. Furthermore, he will at his own cost and expense maintain the roof for (2) years after acceptance, in accordance with the current edition of the Roof Maintenance Manual published by the Roofing Industry Educational Institute. The roof shall be inspected a minimum of twice each year, and a report prepared documenting the conditions observed at each inspection. These inspections shall be made once during the months of April or May and once during the months of September and October. Two copies of each report shall be forwarded to the Owner and User Agency.

This Guarantee is made subject to the following terms and conditions:

1. Specifically excluded from this guarantee are damages to the Work, other parts of the building and building contents caused by: A) lightning, windstorm (includes hurricanes and tornados), hailstorm, earthquakes and other unusual phenomena of the elements; B) fire; and C) structural failures causing excessive roof deck, edgings and related roof components movement. When the Work has been damaged by any of the foregoing causes, the Guarantee will be null and void until such damage has been repaired by the Roofing Contractor, and until the cost and expense thereof has been paid by the Owner or another responsible party so designated.

2. During the Guarantee Period, if the Owner/User Agency allows alteration of the Work by anyone other than a Contractor approved in writing by the Roofing Subcontractor, General Contractor, and Roofing Material Manufacturer prior to the work being performed, including cutting, patching and maintenance in connection with penetrations, attachment of other work, and positioning of anything on the roof, this Guarantee shall become null and void upon the date of said alterations. If the Owner/User Agency engages the Roofing Contractor to perform said alterations, the Guarantee shall not become null and void, unless the Roofing Contractor, prior to proceeding with said work, shall have notified the Owner/User Agency in writing, showing reasonable cause for claim that said alterations would likely damage or deteriorate the Work, thereby reasonably justifying a termination of this Guarantee.

3. During the Guarantee Period, if the original use of the roof is changed and it becomes used for, but for which it was not originally designed or specified, as a promenade, work deck, spray-cooled surface, flooded basin, or other use of service more severe than originally specified, this Guarantee shall become null and void upon the date of said change.

4. During the Guarantee Period, if any building or area of a building is changed to uses creating extremes of interior temperature and/or humidity, but for which it was not originally designed and specified, without provisions and alterations made to the building which effectively contain or control these conditions, this Guarantee shall become null and void upon the date of said change.

5. The Owner/User Agency shall promptly notify the Roofing Contractor in writing of observed, known or suspected leaks, defects or deterioration and shall afford reasonable opportunity for the Roofing Contractor to inspect the Work, and to examine the evidence of such leaks, defects or deterioration.

6. This Guarantee is recognized to be the only guarantee of the General and Roofing Contractor on said work, and shall not operate to restrict or cut off the Owner from other remedies and recourses lawfully available to him in case of roofing failure. Specifically, this Guarantee shall not operate to relieve the Roofing Contractor of his responsibility for performance of the original work, regardless of whether the Contract was a Contract directly with the Owner or a Subcontract with the Owner's General Contractor.

IN WITNESS THEREOF, this instrument has been duly executed this _____
day of _____, 20_____.

Roofing Contractor's Signature: _____

Typed Name: _____

Representing:_____

Telephone Number: _____

Witness:_____

_____

Telephone Number: _____

Witness: _____

THIS SHEET INTENTIONALLY BLANK

ROOF COMPLETION INFORMATION

Facility Name _____ Building Name _____
Site I.D.. _____ Building I.D. _____ Project No. _____
Roof Section _____ Replacement _____

Roof Type:	**Surfacing Type:**	**Bitumen Type:**	**Drainage Type:**
1. BUR	1. Gravel	1. Hot Asphalt	1. Over the Edge
2. SBS Mod. Bit.	2. Smooth Uncoated	2. Torched Asphalt	2. Roof Drains
3. APP Mod. Bit.	3. Modified Asphalt	3. Cold Process	3. Perimeter Gutter
4. PVC/CPV	4. Ceramic Granules	4. Pitch	4. Internal Gutter
5. PUF	5. Silicone	5. Modified	5. _____
6. Metal	6. Acrylic	6. None	
7. Shingle	7. Urethane	7. _____	**Total Penetrations:**
8. Tile	8. Aluminum		_____
9. _____	9. _____		
Slope:	**Deck Type:**	**Insulation:**	**No. of Piles:**
1. None	1. Structural Concrete	1. Polyurethane Foam	_____
2. 1/8 in./ft.	2. Gypsum	2. Fiberglass	**Insulation Thickness:**
3. 1/4 in./ft.	3. Metal	3. Perlite	_____
4. 1/2 in/ft.	4. Lt. Wt. Concrete	4. Tapered Perlite	**Roof Area (sq. ft.)**
5. _____	5. Cement Fiber	5. Polystyrene	_____
	6. Wood	6. Wood Fiber	
	7. _____		

Roofing Contractor:

_____

Address:

_____

_____

_____

Roofing Contractor's Telephone: _____

Warranty Beginning Date:

_____

Warranty Ending Date:

_____

Roofing Manufacturer:

_____

Address:

_____

_____

_____

Roofing Manufacturer's Telephone: _____

Roof Warranty Number:

_____

Beginning Date:

_____

Ending Date:

_____

THIS SHEET INTENTIONALLY BLANK

SECTION 011000 - SUMMARY

PART 1 - GENERAL

1.1 RELATED DOCUMENTS

A. Drawings and general provisions of the Contract, including General and Supplementary Conditions and other Division 01 Specification Sections, apply to this Section.

1.2 SUMMARY

A. Section Includes:

1. Project information.
2. Work covered by Contract Documents.
3. Phased construction.
4. Work by Owner.
5. Work under separate contracts.
6. Future work.
7. Purchase contracts.
8. Owner-furnished products.
9. Contractor-furnished, Owner-installed products.
10. Access to site.
11. Coordination with occupants.
12. Work restrictions.
13. Specification and Drawing conventions.
14. Miscellaneous provisions.

B. Related Requirements:

1. Section 015000 "Temporary Facilities and Controls" for limitations and procedures governing temporary use of Owner's facilities.

1.3 PROJECT INFORMATION

A. Project Identification: UNO Engineering Building, Section B Roof Replacement.

1. Project Location: University of New Orleans, Main Campus, 2000 Lakeshore Drive, New Orleans, LA 70148

B. Owner: University of New Orleans

1. Owner's Representative: Ms. Melanie Champagne; Director, Construction and Design: UNO Facility Services; Administration Bldg, Room 112; 2000 Lakeshore Drive, New Orleans, LA 70148; 504 280-3237; mmchamp2@uno.edu

C. Architect: Holly & Smith Architects, APAC

1. Architect’s Representative: Mr. Rohit Sood; Holly & Smith Architects; 2302 Magazine Street, New Orleans, LA 70130. 504 584-1315; rohit@hollyandsmith.com

D. Other Owner Consultants: Owner has retained the following design professionals who have prepared designated portions of the Contract Documents:

1. No other consultants involved.

E. Web-Based Project Software: Project software administered by the Architect will be used for purposes of managing communication and documents during the construction stage.

1. See Section 013100 "Project Management and Coordination." for requirements for utilizing the using web-based Project software.

1.4 WORK COVERED BY CONTRACT DOCUMENTS

A. The Work of Project is defined by the Contract Documents and consists of the following:

1. Replacement of the existing low slope roof system with a new roof. Including the following:
   a. The removal, disposal and replacement of the existing ballasted, insulated, built-up roof system, including roof drains and roofing accessories to the existing concrete roof deck.
   b. Provide and install tapered polyisocyanurate insulation to achieve the slopes indicated, including crickets where needed to ensure positive drainage to replacement roof drains at existing locations.
   c. Provide and install associated flashings and roof accessories.
   d. Address roofing / flashings and height of roof area equipment platforms, vents, curbs, parapets, etc. to properly accommodate roofing and / or reroofing requirements to ensure code and manufacturer's warranty requirements.
   e. Provide and install State of Louisiana approved 20-year 2-ply, SBS modified bitumen roofing system along with associated flashing and accessories in accordance with manufacturer's recommendations.
   f. The roof covers approximately 12,750 square feet and is located above the 10th story of the existing building.

B. Type of Contract:

1. Project will be constructed under a single prime contract.

1.5 PHASED CONSTRUCTION

A. The Work shall be conducted in a single phase.

1.6 WORK BY OWNER

A. General: Cooperate fully with Owner so work may be carried out smoothly, without interfering with or delaying work under this Contract or work by Owner. Coordinate the Work of this Contract with work performed by Owner.

B. Work will be performed by or through coordination with the owner during the contract to facilitate the execution of the contractor's work and maintain a safe environment around the telecommunications equipment mounted to the roof.

1. The General Contractor shall provide the Owner three (3) working days notice of work around the platforms and antenna arrays.

1.7 WORK UNDER SEPARATE CONTRACTS

A. There is no work under separate contract on this project.

1.8 FUTURE WORK

A. There is no Future Work by the Owner involved in this project.

1.9 PURCHASE CONTRACTS

A. The Owner has no Purchase contracts with suppliers of material and equipment to be incorporated into the Work of this project.

1.10 OWNER-FURNISHED PRODUCTS

A. Owner is not furnishing any products for this project.

1.11 CONTRACTOR-FURNISHED, OWNER-INSTALLED PRODUCTS

A. There are no Contractor-Furnished, Owner-Installed products on this project.

1.12 ACCESS TO SITE

A. General: Contractor shall have limited use of Project site for construction operations as indicated on Drawings, by the Contract limits and as indicated by requirements of this Section.

B. Use of Site: Limit use of Project site to areas within the Contract limits indicated. Do not disturb portions of Project site beyond areas in which the Work is indicated. The building and surrounding area will remain in use during construction.

1. Limits: Confine construction operations to the roof area indicated as Section B in the drawings as well as staging and parking areas identified by the owner.
   a. General Contractor shall coordinate with the owner to gain access to perform work within the building
   b. General Contractor shall have limited use of the East Stairway for personnel access to the roof. No materials are to be brought to the roof through the building.
   c. General Contractor has NO access to building elevators.
2. Driveways, Walkways and Entrances: Keep driveways, walkways, stairs and entrances serving premises clear and available to Owner, Owner's employees, and emergency vehicles at all times. Do not use these areas for parking or for storage of materials.

   a. Schedule deliveries to minimize use of driveways and entrances by construction operations.
   b. Schedule deliveries to minimize space and time requirements for storage of materials and equipment on-site.

C. Condition of Existing Building: Maintain portions of existing building affected by construction operations in a weathertight condition throughout construction period. Repair damage caused by construction operations.

D. Condition of Existing Grounds: Maintain portions of existing grounds, landscaping, and hardscaping affected by construction operations throughout construction period. Repair damage caused by construction operations.

1.13 COORDINATION WITH OCCUPANTS

A. Full Owner Occupancy: Owner will occupy site and adjacent building(s) during entire construction period. Cooperate with Owner during construction operations to minimize conflicts and facilitate Owner usage. Perform the Work so as not to interfere with Owner's day-to-day operations. Maintain existing exits unless otherwise indicated.

1. Maintain access to existing walkways, corridors, and other adjacent occupied or used facilities. Do not close or obstruct walkways, corridors, or other occupied or used facilities without written permission from Owner and approval of authorities having jurisdiction.
2. Notify Owner not less than 3 working days in advance of activities that will affect Owner's operations.

B. Owner maintains agreements with multiple User Agencies for equipment mounted to the roof. Where the language in Section A above mentioned “Owner” it is understood that the coordination and access extends to the User Agencies.

1. Coordination with User Agencies shall occur through the Owner.

1.14 WORK RESTRICTIONS

A. Work Restrictions, General: Comply with restrictions on construction operations.

1. Comply with limitations on use of public streets and with other requirements of authorities having jurisdiction.

B. On-Site Work Hours: Limit work in the existing building to normal business working hours of seven o’clock a.m. to seven o’clock p.m., Monday through Sunday, unless otherwise indicated.

1. Early Morning Hours: Early morning hours will not be allowed.
2. Hours for Utility Shutdowns: GC shall coordinate with Owner and User Agencies through the owner.

C. Existing Utility Interruptions: Do not interrupt utilities serving facilities occupied by Owner or others unless permitted under the following conditions and then only after providing temporary utility services according to requirements indicated:

1. Notify Owner and Architect not less than two working days in advance of proposed utility interruptions.
2. Obtain Owner's written permission before proceeding with utility interruptions.
3. Interruptions that affect User Agencies shall be coordinated through the Owner.

D. Noise, Vibration, and Odors: Coordinate operations that may result in high levels of noise and vibration, odors, or other disruption to occupants or roof mounted equipment with Owner.

1. Notify Owner and Architect not less than three working days in advance of proposed disruptive operations.
2. Obtain Owner's written permission before proceeding with disruptive operations.

E. Nonsmoking Building: Smoking is not permitted within the building or within 25 feet of entrances, operable windows, or outdoor-air intakes.

F. Restricted Substances: Use of tobacco products and other controlled substances on Project site is not permitted.

G. Employee Identification: Provide identification tags for Contractor personnel working on Project site. Require personnel to use identification tags at all times.

H. Employee Screening: Comply with Owner's requirements for drug and background screening of Contractor personnel working on Project site.

1. Maintain list of approved screened personnel with Owner's representative.

1.15 SPECIFICATION AND DRAWING CONVENTIONS

A. Specification Content: The Specifications use certain conventions for the style of language and the intended meaning of certain terms, words, and phrases when used in particular situations. These conventions are as follows:

1. Imperative mood and streamlined language are generally used in the Specifications. The words "shall," "shall be," or "shall comply with," depending on the context, are implied where a colon (:) is used within a sentence or phrase. Occasionally, the indicative or subjunctive mood may be used in the Section Text for clarity to describe responsibilities that must be fulfilled indirectly by the Contractor.
2. Abbreviated Language: Language used in the Specifications and other Contract Documents is abbreviated. Words and meanings shall be interpreted as appropriate. Words implied, but not stated, shall be inferred as the sense requires. Singular words shall be interpreted as plural, and plural words shall be interpreted as singular where applicable as the context of the Contract Documents indicates.
3. Specification requirements are to be performed by Contractor unless specifically stated otherwise.

B. Division 01 General Requirements: Requirements of Sections in Division 01 apply to the Work of all Sections in the Specifications.

C. Drawing Coordination: Requirements for materials and products identified on Drawings are described in detail in the Specifications. One or more of the following are used on Drawings to identify materials and products:

1. Terminology: Materials and products are identified by the typical generic terms used in the individual Specifications Sections.
2. Abbreviations: Materials and products are identified by abbreviations published as part of the U.S. National CAD Standard, scheduled on Drawings and per typical convention.
3. Keynoting: Materials and products are identified by reference keynotes referencing Specification Section numbers found in this Project Manual.

1.16 MISCELLANEOUS PROVISIONS

A. Construction Parameters: Refer to drawings and specifications for the required construction parameters. The approach to how the work is executed, if outlined in these contract documents are diagrammatic representations of the approach to construction derived from the Owner's strategy for maintaining operations while the scope of the Work is under construction. Areas indicated as limits of the Work are the approximate location of the boundaries and are not to be construed as an absolute limit of work scope. General Contractor shall acknowledge Owner requirements, field conditions, and project scheduling may alter this preliminary construction information by the time of actual performance, therefore any reliance by the General Contractor on these preliminary construction parameters are at the General Contractors own risk. Therefore, the General Contractor shall waive all claims related to delay, acceleration and/or inefficiency related to any subsequent modification of this preliminary construction parameters information.

B. Meetings to Discuss Approach: Meet with Owner and Architect far enough in advance to coordinate takeover and initiating each construction component / Approach. Failure to coordinate and document such a meeting will result in potential delays not the fault of the Owner or Architect or any of their consultants.

PART 2 - PRODUCTS (Not Used)

PART 3 - EXECUTION (Not Used)

END OF SECTION **011000**

SECTION 012300 - ALTERNATES

PART 1 - GENERAL

1.1 RELATED DOCUMENTS

A. Drawings and general provisions of the Contract, including General and Supplementary Conditions and other Division 01 Specification Sections, apply to this Section.

1.2 SUMMARY

A. Section includes administrative and procedural requirements for alternates.

1.3 DEFINITIONS

A. Alternate: An amount proposed by bidders and stated on the Bid Form for certain work defined in the bidding requirements that may be added to or deducted from the base bid amount if the Owner decides to accept a corresponding change either in the amount of construction to be completed or in the products, materials, equipment, systems, or installation methods described in the Contract Documents.

1. Alternates described in this Section are part of the Work only if enumerated in the Agreement.
2. The cost or credit for each alternate is the net addition to or deduction from the Contract Sum to incorporate alternates into the Work. No other adjustments are made to the Contract Sum.

1.4 PROCEDURES

A. Coordination: Revise or adjust affected adjacent work as necessary to completely integrate work of the alternate into Project.

1. Include as part of each alternate, miscellaneous devices, accessory objects, and similar items incidental to or required for a complete installation whether or not indicated as part of alternate.

B. Notification: Immediately following award of the Contract, notify each party involved, in writing, of the status of each alternate. Indicate if alternates have been accepted, rejected, or deferred for later consideration. Include a complete description of negotiated modifications to alternates.

C. Execute accepted alternates under the same conditions as other work of the Contract.

D. Schedule: A schedule of alternates is included at the end of this Section. Specification Sections referenced in schedule contain requirements for materials necessary to achieve the work described under each alternate.

PART 2 - PRODUCTS (Not Used)

PART 3 - EXECUTION

3.1 SCHEDULE OF ALTERNATES

A. Alternate No. 1: Add Parapet Wall and Cap Flashing Replacement.

1. Base Bid: Existing weather protection on the back side of the parapet wall and all cap flashing / coping shall remain, except as necessary to install the replacement flashing & counterflashing at the main roof level as shown in plans on sheets A001 and A901 and details on sheets A911 and A912
2. Alternate: Provide all labor, material, equipment, and incidentals as required to do the following: Demolish and dispose of existing cap flashing / coping and associated wood nailers. Scrape loose material from and prepare existing weather protection on the interior face of the parapet wall for the installation of cement board and water-proofing membrane system. Provide and install pressure treated wood nailers cap flashing / coping, wall flashing system and all associated cleats, clips, supports, counterflashing, fasteners, sealant, and other items for a complete waterproofing and flashing system. All work as indicated on the drawings and as specified in Section 075500 MODIFIED BITUMEN MEMBRANE ROOFING.

B. Alternate No. 2: Add Base Waterproofing Layer.

1. Base Bid: Install the roofing insulation system directly to the existing concrete roof deck per the construction documents and manufacturers' recommendations.
2. Alternate: Provide all labor, material, equipment, and incidentals as required to do the following: Provide and install a base waterproofing layer on the existing concrete roof deck and install the roof insulation system to the waterproofing layer as indicated in the drawings and as specified in Section 075500 MODIFIED BITUMEN MEMBRANE ROOFING.

END OF SECTION **012300**

SECTION 012600 - CONTRACT MODIFICATION PROCEDURES

PART 1 - GENERAL

1.1 RELATED DOCUMENTS

A. Drawings and general provisions of the Contract, including General and Supplementary Conditions and other Division 01 Specification Sections, apply to this Section.

1.2 SUMMARY

A. Section includes administrative and procedural requirements for handling and processing Contract modifications.

1.3 MINOR CHANGES IN THE WORK

A. Architect will issue supplemental instructions authorizing minor changes in the Work, not involving adjustment to the Contract Sum or the Contract Time, on Architect's Supplemental Instruction (ASI) form included in Project Manual.

1.4 PROPOSAL REQUESTS

A. Owner-Initiated Proposal Requests: Architect will issue a detailed description of proposed changes in the Work that may require adjustment to the Contract Sum or the Contract Time. If necessary, the description will include supplemental or revised Drawings and Specifications.

1. Change Proposal Requests issued by Architect are not instructions either to stop work in progress or to execute the proposed change.
2. Within time specified in Proposal Request, or 14 days when not otherwise specified, after receipt of Proposal Request, submit a quotation estimating cost adjustments to the Contract Sum and the Contract Time necessary to execute the change.

    a. Include a list of quantities of products required or eliminated and unit costs, with total amount of purchases and credits to be made. If requested, furnish survey data to substantiate quantities.
    b. Indicate applicable taxes, delivery charges, equipment rental, and amounts of trade discounts.
    c. Include costs of labor and supervision directly attributable to the change.
    d. Include an updated Contractor's construction schedule that indicates the effect of the change, including, but not limited to, changes in activity duration, start and finish times, and activity relationship. Use available total float before requesting an extension of the Contract Time.
    e. Quotation Form: Use Change Proposal Quotation form included in Project Manual.

B. Contractor-Initiated Proposals: If latent or changed conditions require modifications to the Contract, Contractor may initiate a claim by submitting a request for a change to Architect.

1. Include a statement outlining reasons for the change and the effect of the change on the Work. Provide a complete description of the proposed change. Indicate the effect of the proposed change on the Contract Sum and the Contract Time.
2. Include a list of quantities of products required or eliminated and unit costs, with total amount of purchases and credits to be made. If requested, furnish survey data to substantiate quantities.
3. Indicate applicable taxes, delivery charges, equipment rental, and amounts of trade discounts.
4. Include costs of labor and supervision directly attributable to the change.
5. Include an updated Contractor's construction schedule that indicates the effect of the change, including, but not limited to, changes in activity duration, start and finish times, and activity relationship. Use available total float before requesting an extension of the Contract Time.
6. Comply with requirements in Section 012500 "Substitution Procedures" if the proposed change requires substitution of one product or system for product or system specified.
7. Proposal Request Form: Use Change Proposal Quotation form included in Project Manual.

C. Tracking of Change Proposal Requests: The Architect shall maintain the official Change Proposal Request (CPR) Log. The General Contractor is allowed to monitor and maintain their own system; however, the official contract system shall be maintained by the Architect.

1. Contractor-Initiated Proposals: Assignment of a Contractor-Initiated Proposal as a Change Proposal Request shall be by the Architect, after evaluation and upon determination that the claim is valid.

D. Change Proposal Quotations shall include only the values of labor and materials that are directly affected by the requested change. It shall not include the cost of labor and materials that are on-going during the course of the work for subcontractors, suppliers, and the General Contractor. In addition, the requirements set forth in other sections of the contract documents and not allowing the cost of off-site subcontractors, suppliers and General Contractor's expenses shall apply. The Contractor shall adhere to the following when executing a Change Proposal Quotation:

1. If the work is concurrent with the ongoing construction of the project, and the work is, in the opinion of the architect, concurrent with the ongoing work in process, supervision and support personnel, including the Project Superintendent and all personnel on site shall not be included in the cost of the change.
2. If extensions of time are requested in the change and the work is, in the opinion of the architect, concurrent with the ongoing work in process, extensions of time will not be granted.
3. If extensions of time are requested because additional manpower is needed to execute the work and the work is, in the opinion of the architect, concurrent with the ongoing work in process, the lack of manpower will not be acceptable as a basis for an extension of time.
4. In all cases, the request for any supervision expenses can only be considered when an extension of time is granted that extends work beyond the substantial completion date set at the time the request is submitted and if the work is, in the opinion of the architect, non-concurrent with the ongoing work in process.

1.5 CONTRACTOR'S RESPONSE TO PROPOSAL REQUEST

A. The Contractor is obligated to respond to the time frames as noted on the issued Change Proposal Request Form or advise the Architect in writing of the date on which the proposal submission will be submitted. Failure to do so obligates the Contractor to respond within the time frame indicated on the Change Proposal Request Form. Should the timeframe for receipt of the change proposal quotation exceed that indicated on the Change Proposal Request form:

1. The Contractor shall not have grounds for a claim for a request for an extension of time.
2. The Contractor shall not have grounds for a claim for additional cost due to delay of the project.
3. The Contractor shall not have grounds for a claim for additional cost or extension of time for the development of conditions manifesting as a result of failure of the Contractor to meet the timeframes stipulated.

B. The Contractor is obligated to respond to the change request in sufficient itemized form to be properly evaluated by the Architect and the Owner. At a minimum the following shall be included in the breakdown using the forms required by the owner or as indicated within these specifications:

1. Itemized labor with unit cost for each category of labor used.
2. Wages shall itemize direct cost and delineate a labor burden markup for applicable payroll taxes, worker compensation insurance, unemployment compensation, and social security taxes. As a means to be specific the following is to be included in the Labor Burden calculations:

   a. FICA
   b. Medicaid
   c. Employer FICA and Medicaid Match
   d. Worker's Compensation
   e. FUTA
   f. SUTA

   All other components of labor burden not listed above are considered overhead and shall be included in overhead and profit multiplier that is allowed as per the General Conditions of the Contract for Construction. No other markups for labor burden will be considered.
3. Cost of materials, and supplies including the identification of each item and its cost.
4. Identify each piece of machinery and equipment and its individual cost. Only include the cost of the machinery for the time period in which it is being actively used.
5. Cost for estimating the change, schedule revisions, and management efforts associated with implementation of the change into the project shall not be included as line items, as they are tasks considered overhead in this contract.

C. Failure of the Contractor to provide information to properly evaluate the cost associated with the proposed change shall result in the following:

1. The Contractor shall not have grounds for a claim for a request for an extension of time.
2. The Contractor shall not have grounds for a claim for additional cost due to delay of the project.
3. The Contractor shall not have grounds for a claim for additional cost or extension of time for the development of conditions manifesting as a result of failure of the Contractor to meet the timeframes stipulated.

1.6 CHANGE ORDER PROCEDURES

A. On Owner's approval of a Work Change Proposal Request, Architect will issue a Change Order for signatures of Owner and Contractor on AIA Document G701.

1.7 CONSTRUCTION CHANGE DIRECTIVE

A. Construction Change Directive: Architect may issue a Construction Change Directive on AIA Document G714. Construction Change Directive instructs Contractor to proceed with a change in the Work, for subsequent inclusion in a Change Order.

1. Construction Change Directive contains a complete description of change in the Work. It also designates method to be followed to determine change in the Contract Sum or the Contract Time.

B. Documentation: Maintain **detailed** records on a time and material basis of work required by the Construction Change Directive.

1. After completion of change, submit an itemized account and supporting data necessary to substantiate cost and time adjustments to the Contract. At a minimum, the Contractor shall meet the requirements noted in Paragraph 1.5B of this section plus all itemized timesheets for labor and receipts for material.
2. Owner reserves the right to monitor all construction change directives by whatever means necessary to document the work taking place. The Contractor and all subcontractors, sub-subcontractors and suppliers shall fully cooperate with the owner and the owner’s assigned representatives in these endeavors.

1.8 CONTRACTOR'S REQUEST FOR INFORMATION (RFI)

A. Refer to Division 01 Section "Project Management and Coordination" for RFI requirements.

B. If the Contractor believes an RFI response warrants change in the Contract Time or the Contract Sum, he shall notify Architect in writing within ten (10) calendar days of receipt of the RFI response. Assignment of an RFI as a Change Proposal Quotation shall be done by the Architect, after evaluation and upon determination that the Contractor's claim is valid.

PART 2 - PRODUCTS (Not Used)

PART 3 - EXECUTION (Not Used)

END OF SECTION **012600**

SECTION 012900 - PAYMENT PROCEDURES

PART 1 - GENERAL

1.1 RELATED DOCUMENTS

A. Drawings and general provisions of the Contract, including General and Supplementary Conditions and other Division 01 Specification Sections, apply to this Section.

1.2 SUMMARY

A. Section includes administrative and procedural requirements necessary to prepare and process Applications for Payment.

B. Related Requirements:

1. Section 012600 "Contract Modification Procedures" for administrative procedures for handling changes to the Contract.
2. Section 013200 "Construction Progress Documentation" for administrative requirements governing the preparation and submittal of the Contractor's construction schedule.

1.3 DEFINITIONS

A. Schedule of Values: A statement furnished by Contractor allocating portions of the Contract Sum to various portions of the Work and used as the basis for reviewing Contractor's Applications for Payment.

1.4 SCHEDULE OF VALUES

A. Coordination: Coordinate preparation of the schedule of values with preparation of Contractor's construction schedule.

1. Coordinate line items in the schedule of values with the following:

   a. Items required to be indicated as separate activities in Contractor's construction schedule.
   b. Submittal Schedule

2. Submit the schedule of values to Architect at earliest possible date, but no later than seven (7) calendar days after the Pre-Construction Conference.
3. Subschedules for Phased Work: Where the Work is separated into phases requiring separately phased payments, provide subschedules showing values coordinated with each phase of payment.
4. Subschedules for Separate Elements of Work: Where the Contractor's construction schedule defines separate elements of the Work, provide subschedules showing values coordinated with each element.

5. Subschedules for Separate Design Contracts: Where the Owner has retained design professionals under separate contracts who will each provide certification of payment requests, provide subschedules showing values coordinated with the scope of each design services contract, as described in Section 011000 "Summary."

B. Format and Content: Use Project Manual table of contents as a guide to establish line items for the schedule of values. Provide at least one line item for each Specification Section.

1. Identification: Include the following Project identification on the schedule of values:

   a. Project name and location.
   b. Name of Architect.
   c. Architect's Project number.
   d. Contractor's name and address.
   e. Date of submittal.

2. Provide a breakdown of the Contract Sum in enough detail to facilitate continued evaluation of Applications for Payment and progress reports. Coordinate breakdown with the Project Manual Table of Contents. Provide multiple line items for principal subcontract amounts in excess of five (5) percent of the Contract Sum. Break out all values as follows:

   a. Delivered cost of product with taxes paid (material).
   b. Total installation cost with overhead and profit (labor).
   c. Round amounts to nearest whole dollar

3. Provide a separate line item in the schedule of values for each part of the Work where Applications for Payment may include materials or equipment purchased or fabricated and stored, but not yet installed.
4. Allowances: Provide a separate line item in the schedule of values for each allowance. Show line-item value of unit-cost allowances, as a product of the unit cost, multiplied by measured quantity. Use information indicated in the Contract Documents to determine quantities.
5. Purchase Contracts: Provide a separate line item in the schedule of values for each purchase contract. Show line-item value of purchase contract. Indicate Owner payments or deposits, if any, and balance to be paid by Contractor.
6. Overhead Costs: Include total cost and proportionate share of general overhead and profit for each line item.
7. Closeout Costs. Include separate line items under Contractor and principal subcontracts for Project closeout requirements in an amount totaling five (5) percent of the Contract Sum and subcontract amount.
8. Schedule of Values Revisions: Revise the schedule of values when Change Orders or Construction Change Directives result in a change in the Contract Sum. Include at least one separate line item for each Change Order and Construction Change Directive.

1.5 APPLICATIONS FOR PAYMENT

A. Each Application for Payment following the initial Application for Payment shall be consistent with previous applications and payments as certified by Architect and paid for by Owner.

1. The Owner reserves the right to request additional cost information breakdowns in any format necessary as may be required for their needs in getting the project completed. This request shall be submitted to the Architect for processing to the Contractor. The Contractor shall submit the requested information to the Owner, through the Architect, within fourteen days of the request by the Architect.
2. Initial Application for Payment, Application for Payment at time of Substantial Completion, and final Application for Payment involve additional requirements.

B. Payment Application Times: The date for each progress payment is indicated in the Agreement between Owner and Contractor. The period of construction work covered by each Application for Payment is the period indicated in the Agreement.

C. Payment Application Times: Submit Application for Payment to Architect by the <Insert day> of the month. The period covered by each Application for Payment is one month, ending on the [last day of the month] <Insert specific day of the month>.

1. Submit draft copy of Application for Payment seven (7) days prior to due date for review by Architect.

D. Application for Payment Forms: Use AIA Document G702 and AIA Document G703 as form for Applications for Payment.

E. Application Preparation: Complete every entry on form. Notarize and execute by a person authorized to sign legal documents on behalf of Contractor. Architect] will return incomplete applications without action.

1. Entries shall match data on the schedule of values and Contractor's construction schedule. Use updated schedules if revisions were made.
2. Include amounts for work completed following previous Application for Payment, whether or not payment has been received. Include only amounts for work completed at time of Application for Payment.
3. Include amounts of Change Orders issued before last day of construction period covered by application.
4. Submit a draft application to the architect for review prior to submitting the actual monthly application. Submit in sufficient time to allow field review by the architect and the architect's consultants. Time draft submission to coincide with scheduled monthly Owner meeting at the site.

F. Stored Materials: Include in Application for Payment amounts applied for materials or equipment purchased or fabricated and stored, but not yet installed. The contractor shall not apply for any stored materials not delivered to the site.

1. If required by the Owner, provide certificate of insurance, evidence of transfer of title to Owner, and consent of surety to payment for stored materials.
2. Provide supporting documentation that verifies amount requested, such as paid invoices. Match amount requested with amounts indicated on documentation; do not include overhead and profit on stored materials. The attached supporting documentation shall include the following:

   a. Quantity of each different material included in application.
   b. Unit price of each different material in application.
   c. Extended cost of each different material in application.
   d. Signature of authorized party representing the supplier.

3. Provide summary documentation for stored materials indicating the following:

a. Value of materials previously stored and remaining stored as of date of previous Applications for Payment.
b. Value of previously stored materials put in place after date of previous Application for Payment and on or before date of current Application for Payment.
c. Value of materials stored since date of previous Application for Payment and remaining stored as of date of current Application for Payment.

4. Do not apply for stored materials that are out of sequence with construction operations. The Architect's decision on this matter is final.
5. Failure to follow the information contained herein shall result in immediate rejection of the whole Application for Payment.

G. Transmittal: Submit one (1) signed and notarized electronic copy of each Application for Payment to Architect via the designated web-based program. Include waivers of lien and similar attachments.

1. Transmit each copy with a transmittal form listing attachments and recording appropriate information about application.

H. Waivers of Mechanic's Lien: With each Application for Payment, submit waivers of mechanic's lien from entities lawfully entitled to file a mechanic's lien arising out of the Contract and related to the Work covered by the payment.

1. Submit partial waivers on each item for amount requested in previous application, after deduction for retainage, on each item.
2. When an application shows completion of an item, submit conditional final or full waivers.
3. Owner reserves the right to designate which entities involved in the Work must submit waivers.
4. Submit final Application for Payment with or preceded by conditional final waivers from every entity involved with performance of the Work covered by the application who is lawfully entitled to a lien.
5. Waiver Forms: Submit executed waivers of lien on forms acceptable to Owner.

I. Initial Application for Payment: Administrative actions and submittals that must precede the submittal of first Application for Payment include the following:

1. List of subcontractors.
2. Approved Schedule of Values.
3. Approved Contractor's construction schedule.
4. Submittal schedule (preliminary if not final).
5. List of Contractor's staff assignments.
6. Copies of authorizations and licenses from authorities having jurisdiction for performance of the Work.
7. Certificates of insurance and insurance policies.
8. Performance and payment bonds.
9. Data needed to acquire Owner's insurance.

J. Application for Payment at Substantial Completion: After Architect issues the Certificate of Substantial Completion, submit an Application for Payment showing 100 percent completion for portion of the Work claimed as substantially complete.

1. Include documentation supporting claim that the Work is substantially complete and a statement showing an accounting of changes to the Contract Sum.
2. This application shall reflect Certificate(s) of Substantial Completion issued previously for Owner occupancy of designated portions of the Work.

K. Final Payment Application: After completing Project closeout requirements, submit final Application for Payment with releases and supporting documentation not previously submitted and accepted, including, but not limited, to the following:

1. Evidence of completion of Project closeout requirements.
2. Insurance certificates for products and completed operations where required and proof that taxes, fees, and similar obligations were paid.
3. Updated final statement, accounting for final changes to the Contract Sum.
4. AIA Document G707, "Consent of Surety to Final Payment."
5. Evidence that claims have been settled.
6. Final meter readings for utilities, a measured record of stored fuel, and similar data as of date of Substantial Completion or when Owner took possession of and assumed responsibility for corresponding elements of the Work.

PART 2 - PRODUCTS (Not Used)

PART 3 - EXECUTION (Not Used)

END OF SECTION **012900**

THIS SHEET INTENTIONALLY LEFT BLANK

SECTION 013100 - PROJECT MANAGEMENT AND COORDINATION

PART 1 - GENERAL

1.1 RELATED DOCUMENTS

A. Drawings and general provisions of the Contract, including General and Supplementary Conditions and other Division 01 Specification Sections, apply to this Section.

1.2 SUMMARY

A. Section includes administrative provisions for coordinating construction operations on Project including, but not limited to, the following:

1. General coordination procedures.
2. Coordination drawings.
3. Requests for Information (RFIs).
4. Administrative and supervisory personnel.
5. Digital project management procedures.
6. Project meetings.
7. Official Project Communications

B. Related Requirements:

1. Section 011000 "Summary of Work" for coordination and scheduling of equipment and movables by the Owner.
2. Section 013200 "Construction Progress Documentation" for preparing and submitting Contractor's construction schedule.
3. Section 017300 "Execution" for procedures for coordinating general installation and field-engineering services, including establishment of benchmarks and control points.
4. Section 017700 "Closeout Procedures" for coordinating closeout of the Contract.

1.3 DEFINITIONS

A. BIM: Building Information Modeling.

B. RFI: Request for Information. Request from Owner, [Construction Manager,]Architect, or Contractor seeking information required by or clarifications of the Contract Documents.

C. Letter: A written, typed, or printed communication, especially one sent in an envelope by mail or courier.

D. Email: Messages distributed by electronic means from one computer user to one or more recipients via a network.

E. Text Message: An electronic communication sent and received by mobile phone.

F. Verbal Communication: The sharing of information between individuals by using speech.

1.4 INFORMATIONAL SUBMITTALS

A. Subcontract List: Prepare a written summary identifying individuals or firms proposed for each portion of the Work, including those who are to furnish products or equipment fabricated to a special design. Include the following information in tabular form:

1. Name, address, telephone number, and email address of entity performing subcontract or supplying products.
2. Number and title of related Specification Section(s) covered by subcontract.
3. Drawing number and detail references, as appropriate, covered by subcontract.

B. Key Personnel Names: Within ten (10) days of starting construction operations, submit a list of key personnel assignments, including superintendent and other personnel in attendance at Project site. Identify individuals and their duties and responsibilities; list addresses and cellular telephone numbers and e-mail addresses. Provide names, addresses, and telephone numbers of individuals assigned as alternates in the absence of individuals assigned to Project.

1. Post copies of list in project meeting room, in temporary field office, [in web-based Project software directory,]and in prominent location in [each]built facility. Keep list current at all times.
2. Changing of assigned personnel reviewed and approved by the Owner can only be done with written approval by Owner.

1.5 GENERAL COORDINATION PROCEDURES

A. Coordination: Coordinate construction operations included in different Sections of the Specifications to ensure efficient and orderly installation of each part of the Work. Coordinate construction operations included in different Sections that depend on each other for proper installation, connection, and operation.

1. Schedule construction operations in sequence required to obtain the best results where installation of one part of the Work depends on installation of other components, before or after its own installation.
2. Coordinate installation of different components to ensure maximum performance and accessibility for required maintenance, service, and repair.
3. Make adequate provisions to accommodate items scheduled for later installation.

B. Coordination: Each contractor shall cooperate with Project coordinator who shall coordinate its construction operations with those of other contractors and entities to ensure efficient and orderly installation of each part of the Work. Each contractor shall coordinate its own operations with operations included in different Sections that depend on each other for proper installation, connection, and operation.

1. Schedule construction operations in sequence required to obtain the best results where installation of one part of the Work depends on installation of other components, before or after its own installation.
2. Coordinate installation of different components with other contractors to ensure maximum performance and accessibility for required maintenance, service, and repair.
3. Make adequate provisions to accommodate items scheduled for later installation.

C. Prepare memoranda for distribution to each party involved, outlining special procedures required for coordination. Include such items as required notices, reports, and list of attendees at meetings.

1. Prepare similar memoranda for Owner and separate contractors if coordination of their Work is required.

D. Administrative Procedures: Coordinate scheduling and timing of required administrative procedures with other construction activities[and scheduled activities of other contractors] to avoid conflicts and to ensure orderly progress of the Work. Such administrative activities include, but are not limited to, the following:

1. Preparation of Contractor's construction schedule.
2. Preparation of the schedule of values.
3. Installation and removal of temporary facilities and controls.
4. Delivery and processing of submittals.
5. Progress meetings.
6. Preinstallation conferences.
7. Project closeout activities.
8. Startup and adjustment of systems.

1.6 COORDINATION DRAWINGS

A. Coordination Drawings, General: Prepare coordination drawings according to requirements in individual Sections, and additionally where installation is not completely indicated on Shop Drawings, where limited space availability necessitates coordination, or if coordination is required to facilitate integration of products and materials fabricated or installed by more than one entity.

1. Content: Project-specific information, drawn accurately to a scale large enough to indicate and resolve conflicts. Do not base coordination drawings on standard printed data. Include the following information, as applicable:

   a. Use applicable Drawings as a basis for preparation of coordination drawings. Prepare sections, elevations, and details as needed to describe relationship of various systems and components.

2. Coordinate the addition of trade-specific information to coordination drawings [by multiple contractors]in a sequence that best provides for coordination of the information and resolution of conflicts between installed components before submitting for review.
   a. Indicate functional and spatial relationships of components of architectural, structural, civil, mechanical, and electrical systems.
   b. Indicate space requirements for routine maintenance and for anticipated replacement of components during the life of the installation.
   c. Show location and size of access doors required for access to concealed dampers, valves, and other controls.
   d. Indicate required installation sequences.
   e. Indicate dimensions shown on Drawings. Specifically note dimensions that appear to be in conflict with submitted equipment and minimum clearance requirements. Provide alternative sketches to Architect indicating proposed resolution of such conflicts. Minor dimension changes and difficult installations will not be considered changes to the Contract.
   f. Indicate relationship of components shown on separate submittals and shop drawings.

3. Sheet Size: At least 8½ by 11 inches but no larger than 24 by 36 inches.

B. Coordination Drawing Organization: Organize coordination drawings as follows:

1. Roof Plans: Show architectural and structural elements, and mechanical, plumbing, fire-protection, fire-alarm, and electrical Work. Supplement plan drawings with section drawings where required to adequately represent the Work.
2. Structural Penetrations: Indicate penetrations and openings required for all disciplines.
3. Slab Edge and Embedded Items: Indicate slab edge locations and sizes and locations of embedded items for metal fabrications, sleeves, anchor bolts, bearing plates, angles, and similar items.
4. Mechanical and Plumbing Work: Show the following items that are located above the roof deck:

    a. Sizes and bottom elevations of fans, motors, chimneys, ductwork, piping, and conduit runs, including insulation, bracing, flanges, and support systems.
    b. Dimensions of major components, such as dampers, valves, diffusers, access doors, cleanouts and electrical distribution equipment.
    c. Fire-rated enclosures around ductwork.

5. Electrical and Telecommunications Work: Show the following items that are located above the roof deck:

    a. Runs of vertical and horizontal conduit.
    b. Light fixture, exit light, emergency battery pack, smoke detector, and other fire-alarm locations.
    c. Panel board, switch board, switchgear, transformer, busway, generator, and motor-control center locations.
    d. Location of pull boxes and junction boxes, dimensioned from column center lines.

6. Fire-Protection System: Show the following items that are located above the roof deck:

    a. Locations of standpipes, mains piping, branch lines, pipe drops, and sprinkler heads.

7. Lightning Protection System: Show the following items that are located above the roof deck:

    a. Locations of lightning rods / air terminals and bases and all roof or wall penetrations

8. Review: Architect will review coordination drawings to confirm that in general the Work is being coordinated, but not for the details of the coordination, which are Contractor's responsibility. If Architect determines that coordination drawings are not being prepared in sufficient scope or detail, or are otherwise deficient, Architect will so inform Contractor, who shall make suitable modifications and resubmit.
9. Coordination Drawing Prints: Prepare coordination drawing prints according to requirements in Section 013300 "Submittal Procedures."

C. Coordination Digital Data Files: Prepare coordination digital data files according to the following requirements:

1. File Preparation Format: Same digital data software program, version, and operating system as original Drawings.
2. File Submittal Format: Submit or post coordination drawing files using PDF format.
3. Architect will furnish Contractor, at Architect's discretion, digital data files of Drawings for use in preparing coordination digital data files.

a. Architect makes no representations as to the accuracy or completeness of digital data files as they relate to Drawings.
b. Digital Data Software Program: Drawings are available in Autodesk AutoCAD version 2021.
c. Contractor shall execute a data licensing agreement in the form of Agreement included in this Project Manual.

1.7 REQUEST FOR INFORMATION (RFI)

A. General: Immediately on discovery of the need for additional information, clarification, or interpretation of the Contract Documents, Contractor shall prepare and submit an RFI in the form specified.

1. Architect will return without response those RFIs submitted to Architect by other entities controlled by Contractor.
2. Coordinate and submit RFIs in a prompt manner so as to avoid delays in Contractor's work or work of subcontractors.

B. Content of the RFI: Include a detailed, legible description of item needing information or interpretation and the following:

1. Project name.
2. Architect's and Owner's Project number.
3. Date.
4. Name of Contractor.
5. Name of Architect.
6. RFI number, numbered sequentially.
7. RFI subject.
8. Specification Section number and title and related paragraphs, as appropriate.
9. Drawing number and detail references, as appropriate.
10. Field dimensions and conditions, as appropriate.
11. Contractor's suggested resolution. If Contractor's suggested resolution impacts the Contract Time or the Contract Sum, Contractor shall state impact in the RFI.
12. Contractor's signature.
13. Attachments: Include sketches, descriptions, measurements, photos, Product Data, Shop Drawings, coordination drawings, and other information necessary to fully describe items needing interpretation.

    a. Include dimensions, thicknesses, structural grid references, and details of affected materials, assemblies, and attachments on attached sketches.

C. RFI Forms: Software-generated form with substantially the same content as indicated above, acceptable to Architect.

1. Attachments shall be electronic files in PDF format.

D. Architect's Action: Architect will review each RFI, determine action required, and respond. For standard or simple issues, allow seven (7) working days for Architect's response for each RFI. For more complicated issues as determined by the Architect, the Architect shall submit a schedule indicating when the Architect expects to take action. RFIs received by Architect after 1:00 p.m. will be considered as received the following business day.

1. The following Contractor-generated RFIs will be returned without action:

a. Requests for approval of submittals.
b. Requests for approval of substitutions.
c. Requests for approval of Contractor's means and methods.
d. Requests for coordination information already indicated in the Contract Documents.
e. Requests for adjustments in the Contract Time or the Contract Sum.
f. Requests for interpretation of Architect's actions on submittals.
g. Incomplete RFIs or inaccurately prepared RFIs.

2. Architect's action may include a request for additional information, in which case Architect's time for response will date from time of receipt by Architect of additional information.
3. Architect's action on RFIs that may result in a change to the Contract Time or the Contract Sum may be eligible for Contractor to submit Change Proposal according to Section 012600 "Contract Modification Procedures."

   a. If Contractor believes the RFI response warrants change in the Contract Time or the Contract Sum, notify Architect in writing within ten (10) days of receipt of the RFI response.

E. RFI Log: Prepare, maintain, and submit a tabular log of RFIs organized by the RFI number. Submit log monthly. Use software log that is part of web-based Project software. Log shall contain not less than the following:

1. Project name.
2. Name and address of Contractor.
3. Name and address of Architect.
4. RFI number including RFIs that were returned without action or withdrawn.
5. RFI description.
6. Date the RFI was submitted.
7. Date Architect's response was received.
8. Identification of related Minor Change in the Work, Construction Change Directive, and Chnage Proposal Request, as appropriate.

F. On receipt of Architect's action, update the RFI log and immediately distribute the RFI response to affected parties. Review response and notify Architect within seven (7) days if Contractor disagrees with response.

1.8 ADMINISTRATIVE AND SUPERVISORY PERSONNEL

A. General: In addition to Project superintendant, provide other administrative and supervisory personnel as required for proper performance of the Work.

1. Include special personnel required for coordination of operations with other contractors.

B. Project Superintendent: General Contractor shall provide a full time on-site staff member to perform the duties of Project Superintendent for the duration of this project.

1. General Contractor shall designate a Project Superintendent for this project in the post-bid information prior to contract award. General Contractor shall, in designating the name of this Project Superintendent, warrant and represent that such Project Superintendent has completed two (2) projects of similar size and complexity in the capacity of Project Superintendent during the past 7 years.
2. Submit a resume as a component of post-bid information.

C. Project Manager: General Contractor shall provide a full time staff member to perform the duties of Project Manager for the duration of this project.

1. General Contractor shall designate the Project Manager in the post-bid information prior to contract award. General Contractor shall, in designating the name of this Project Manager, warrant and represent that such Project Manager has a minimum of 2 years of construction experience and has completed a minimum of 2 projects of at least similar size and complexity in the capacity of Project Manager in the last 7 years.
2. The Project Manager shall obtain, process and if necessary, execute all coordination drawings required to execute the work. This shall include all aspects of the effort so that the Project Manager is fully aware and as a result responsible for the development and proper working order of systems within this coordination effort. Failure to execute this work or to properly execute this work shall result in the general contractor being fully responsible for all modifications, repairs or other necessary work in order for provide systems that meet the specified performance requirements and to allow ease of maintenance and repair
3. Submit a resume as a component of post-bid information

1.9 DIGITAL PROJECT MANAGEMENT PROCEDURES

A. Use of Architect's Digital Data Files: Digital data files of Architect's CAD drawings will be provided by Architect, at the Architect's discretion, for Contractor's use during construction.

1. Digital data files may be used by Contractor in preparing coordination drawings, Shop Drawings, and Project record Drawings.
2. Architect makes no representations as to the accuracy or completeness of digital data files as they relate to Contract Drawings.
3. Digital Drawing Software Program: Contract Drawings are available in Autodesk AutoCAD 2021.
4. Contractor shall execute a data licensing agreement in the form of Agreement included in Project Manual.

    a. Subcontractors, and other parties granted access by Contractor to Architect's digital data files shall execute a data licensing agreement in the form of Agreement included in this Project Manual.

B. Web-Based Project Software: Use Architect's web-based Project software site for purposes of hosting and managing Project communication and documentation until Final Completion.

C. Web-Based Project Software: The General Contractor shall be required to access and use the Architect's web-based Project software site (Project Website) for communication during construction for the activities noted below, and can be accessed at https://projects.hollyandsmith.com/UserWeb/. The Architect's Project Website shall host the information that the Architect is using for tracking the work of the contract. This information is available until final acceptance of the project to which access by the General Contractor will be provided for all information indicated below for construction communications.

1. The Project Website includes the following project activities that require interface by the General Contractor:

    a. RFI forms and logs of the Architect.
    b. Submission of RFI's.
    c. Submittal forms and logs of the Architect.
    d. Process and tracking of submittals.

e. Reminder and tracking functions issued by the Architect.
f. Field review minutes of the Architect (Compliance Review).

2. The General Contractor shall become familiar with the operations of the Project Website and shall have the responsibility for continuous use of the website for the benefit of the project. This effort shall include, but is not limited to, the following:

   a. Confirm that access has been granted for each of the functions itemized above for all assigned parties.
   b. Become fluent with the operation of the website at a level that will allow ease of access and regular use.
   c. Schooling all parties assigned to this project within the General Contractor¢s staff for access and use.

3. The Project Website is not intended to replace any General Contractor based project management software but is an enhancement to be used by the General Contractor for accessing information normally requested of the Architect in preparation for meetings, or general project management activities of the General Contractor.
4. The General Contractor shall use the information contained within the Project Website to update their project information in preparation for meetings, communications with the subcontractors, or other project management related activities

D. PDF Document Preparation: Where PDFs are required to be submitted to Architect, prepare as follows:

1. Assemble complete submittal package into a single indexed file incorporating submittal requirements of a single Specification Section and transmittal form with links enabling navigation to each item.
2. Name file with submittal number or other unique identifier, including revision identifier.
3. Certifications: Where digitally submitted certificates and certifications are required, provide a digital signature with digital certificate on where indicated.

1.10 PROJECT MEETINGS

A. General: Schedule and conduct meetings and conferences at Project site unless otherwise indicated.

1. Attendees: Inform participants and others involved, and individuals whose presence is required, of date and time of each meeting. Notify Owner and Architect of scheduled meeting dates and times a minimum of 10 working days prior to meeting.
2. Agenda: Prepare the meeting agenda. Distribute the agenda to all invited attendees.
3. Minutes: Record significant discussions and agreements achieved. Distribute the meeting minutes to everyone concerned, including Owner and Architect, within three (3) days of the meeting.

B. Preconstruction Conference: Schedule and conduct a preconstruction conference before starting construction, at a time convenient to Owner and Architect, but no later than 15 days after execution of the Agreement.

1. Attendees: Authorized representatives of Owner, Owner's Associated Parties (Telecommunication Lessees), Architect, and their consultants; Contractor and its superintendent; major subcontractors; suppliers; and other concerned parties shall attend the conference. Participants at the conference shall be familiar with Project and authorized to conclude matters relating to the Work.

2. Agenda: Discuss items of significance that could affect progress, including the following:

    a. Responsibilities and personnel assignments.
    b. Tentative construction schedule.
    c. Phasing.
    d. Critical work sequencing and long lead items.
    e. Designation of key personnel and their duties.
    f. Lines of communications.
    g. Use of web-based Project software.
    h. Procedures for processing field decisions and Change Orders.
    i. Procedures for RFIs.
    j. Procedures for testing and inspecting.
    k. Procedures for processing Applications for Payment.
    l. Distribution of the Contract Documents.
    m. Submittal procedures.
    n. Preparation of Record Documents.
    o. Use of the premises and existing building.
    p. Work restrictions.
    q. Working hours.
    r. Owner's occupancy requirements.
    s. Responsibility for temporary facilities and controls.
    t. Procedures for moisture and mold control.
    u. Procedures for disruptions and shutdowns.
    v. Construction waste management and recycling.
    w. Parking availability.
    x. Office, work, and storage areas.
    y. Equipment deliveries and priorities.
    z. First aid.
    aa. Security.
    bb. Progress cleaning.

3. Minutes: Entity responsible for conducting meeting will record and distribute meeting minutes.

C. Preinstallation Conferences: Conduct a preinstallation conference at Project site before each construction activity when required by other sections and when required for coordination with other construction.

1. Attendees: Installer and representatives of manufacturers and fabricators involved in or affected by the installation and its coordination or integration with other materials and installations that have preceded or will follow, shall attend the meeting. Advise Architect and Owner of scheduled meeting dates.
2. Agenda: Review progress of other construction activities and preparations for the particular activity under consideration, including requirements for the following:

    a. Contract Documents.
    b. Options.
    c. Related RFIs.
    d. Related Change Orders.
    e. Purchases.
    f. Deliveries.
    g. Submittals.
    h. Review of mockups.
    i. Possible conflicts.
    j. Compatibility requirements.
    k. Time schedules.

l. Weather limitations.
m. Manufacturer's written instructions.
n. Warranty requirements.
o. Compatibility of materials.
p. Acceptability of substrates.
q. Temporary facilities and controls.
r. Space and access limitations.
s. Regulations of authorities having jurisdiction.
t. Testing and inspecting requirements.
u. Installation procedures.
v. Coordination with other work.
w. Required performance results.
x. Protection of adjacent work.
y. Protection of construction and personnel.

3. Record significant conference discussions, agreements, and disagreements, including required corrective measures and actions.
4. Reporting: Distribute minutes of the meeting to each party present and to other parties requiring information.
5. Do not proceed with installation if the conference cannot be successfully concluded. Initiate whatever actions are necessary to resolve impediments to performance of the Work and reconvene the conference at earliest feasible date.

D. Project Closeout Conference: Schedule and conduct a project closeout conference, at a time convenient to Owner and Architect, but no later than 30 days prior to the scheduled date of Substantial Completion.

1. Conduct the conference to review requirements and responsibilities related to Project closeout.
2. Attendees: Authorized representatives of Owner, Architect, and their consultants; Contractor and its superintendent; major subcontractors; suppliers; and other concerned parties shall attend the meeting. Participants at the meeting shall be familiar with Project and authorized to conclude matters relating to the Work.
3. Agenda: Discuss items of significance that could affect or delay Project closeout, including the following:

a. Preparation of Record Documents.
b. Procedures required prior to inspection for Substantial Completion and for final inspection for acceptance.
c. Procedures for completing and archiving web-based Project software site data files.
d. Submittal of written warranties.
e. Requirements for completing sustainable design documentation.
f. Requirements for preparing operations and maintenance data.
g. Requirements for delivery of material samples, attic stock, and spare parts.
h. Requirements for demonstration and training.
i. Preparation of Contractor's punch list.
j. Procedures for processing Applications for Payment at Substantial Completion and for final payment.
k. Submittal procedures.
l. Coordination of separate contracts.
m. Owner's partial occupancy requirements.
n. Responsibility for removing temporary facilities and controls.

4. Minutes: Entity conducting meeting will record and distribute meeting minutes.

E. Progress Meetings: Conduct progress meetings at bi-weekly (every two weeks) intervals.

1. Coordinate dates of meetings with preparation of payment requests.
2. Attendees: In addition to representatives of Owner and Architect, each contractor, subcontractor, supplier, and other entity concerned with current progress or involved in planning, coordination, or performance of future activities within the next 30 Days shall be represented at these meetings. All participants at the meeting shall be familiar with Project and authorized to conclude matters relating to the Work.
3. Agenda: Review and correct or approve minutes of previous progress meeting. Review other items of significance that could affect progress. Include topics for discussion as appropriate to status of Project.

    a. Contractor's Construction Schedule: Review progress since the last meeting. Determine whether each activity is on time, ahead of schedule, or behind schedule, in relation to Contractor's construction schedule. Determine how construction behind schedule will be expedited; secure commitments from parties involved to do so. Discuss whether schedule revisions are required to ensure that current and subsequent activities will be completed within the Contract Time.

        1) Review schedule for next period.

    b. Review present and future needs of each entity present, including the following:

        1) Interface requirements.
        2) Sequence of operations.
        3) Status of submittals.
        4) Deliveries.
        5) Off-site fabrication.
        6) Access.
        7) Site use.
        8) Temporary facilities and controls.
        9) Progress cleaning.
        10) Quality and work standards.
        11) Status of correction of deficient items.
        12) Field observations.
        13) Status of RFIs.
        14) Status of Proposal Requests.
        15) Pending changes.
        16) Status of Change Orders.
        17) Pending claims and disputes.
        18) Documentation of information for payment requests.

4. Minutes: Record and distribute the meeting minutes to each party present and to parties requiring information.

    a. Schedule Updating: Revise Contractor's construction schedule after each progress meeting where revisions to the schedule have been made or recognized. Issue revised schedule concurrently with the report of each meeting.

1.11 OFFICIAL PROJECT COMMUNICATIONS

A. General: Use of letters and emails are recognized as official project communication mediums for this project.

1. Under no circumstances will text messages or verbal communication be considered official project communications. Should text messages or verbal communication be used, follow up with official project communications is necessary for the information to be recognized.
2. The transmittal of all procedural documents (e.g. schedules, submittals, applications for payment, RFIs, ARFIs, etc.) shall be done through official communications mediums only.

PART 2 - PRODUCTS (Not Used)

PART 3 - EXECUTION (Not Used)

END OF SECTION **013100**

SECTION 013200 - CONSTRUCTION PROGRESS DOCUMENTATION

PART 1 - GENERAL

1.1 RELATED DOCUMENTS

A. Drawings and general provisions of the Contract, including General and Supplementary Conditions and other Division 01 Specification Sections, apply to this Section.

1.2 SUMMARY

A. Section includes administrative and procedural requirements for documenting the progress of construction during performance of the Work, including the following:

1. Startup construction schedule.
2. Contractor's Construction Schedule.
3. Construction schedule updating reports.
4. Daily construction reports.
5. Material location reports.
6. Site condition reports.
7. Unusual event reports.

B. Related Requirements:

1. Section 011200 "Multiple Contract Summary" for preparing a combined Contractor's Construction Schedule.

1.3 DEFINITIONS

A. Activity: A discrete part of a project that can be identified for planning, scheduling, monitoring, and controlling the construction Project. Activities included in a construction schedule consume time and resources.

1. Critical Activity: An activity on the critical path that must start and finish on the planned early start and finish times.
2. Predecessor Activity: An activity that precedes another activity in the network.
3. Successor Activity: An activity that follows another activity in the network.

B. Baseline Schedule: The Contractor's initial CPM Progress Schedule presenting an orderly and realistic plan for completion of the entire Work of the Project. When accepted by the Owner, the Baseline Schedule becomes the initial version of the Official Progress Schedule. The Baseline Schedule is prepared in chart or graph format, consistent in all respects with the Contract Time(s) and order of Work, presented in sufficient detail to show the chronological relationship of all activities of the Project including but not limited to planned starting and completion dates of various activities, submittal of Shop Drawings and Product Data, procurement of materials and equipment, and deliveries of materials and equipment

C. Cost Loading: The allocation of the schedule of values for completing an activity as scheduled. The sum of costs for all activities must equal the total Contract Sum unless otherwise approved by Architect.

D. CPM Progress Schedule: The Contractor's Progress Schedule prepared in CPM Precedence format using the scheduling software required.

E. CPM: Critical path method, which is a method of planning and scheduling a construction project where activities are arranged based on activity relationships. Network calculations determine when activities can be performed and the critical path of Project.

F. Critical Path: The set or sequence of predecessor/successor activities which will take the longest time to complete. The duration of the critical path is the sum of the activities' durations along the path. Thus, the critical path can be defined as the longest possible path through the network of project activities. The duration of the critical path represents the minimum time required to complete a project and contains no float.

G. Event: The starting or ending point of an activity.

H. Float: The number of work/calendar days an activity can be delayed without impacting the project completion date.

1. Float time is not for the exclusive use or benefit of either Owner or Contractor, but is a jointly owned, expiring Project resource available to both parties as needed to meet schedule milestones and Contract completion date. The Project "owns" float.
2. Free float is the amount of time an activity can be delayed without adversely affecting the early start of the successor activity.
3. Total float is the measure of leeway in starting or completing an activity without adversely affecting the planned Project completion date.

I. Resource Loading: The allocation of manpower and equipment necessary for completing an activity as scheduled.

J. Official Progress Schedule: The Contractor's Progress Schedule and all revisions and updates thereto, accepted by the Owner, in accordance with the requirements of the Contract Documents.

K. Revised Official Progress Schedule: A proposed Schedule submitted with the Contractor's written request to revise the current version of the Official Progress Schedule. If the Owner accepts the Contractor's request to revise the Official Progress Schedule, it becomes the new current version of the Official Progress Schedule.

L. Short Interval Schedule: The Contractor's four-week schedule, updated weekly, showing the past week, the week submitted, and two weeks thereafter. The Short Interval Schedule must correlate with the current version of the Official Progress Schedule and reference the appropriate activity numbers. The Short Interval Schedule must indicate the actual start and finish dates of all activities on the Official Progress Schedule that are started or finished during the time period encompassed by the Short Interval Schedule

M. Updated Official Progress Schedule: The current version of the Official Progress Schedule updated monthly to include the actual start and finish dates of activities and the percentage of completion of each activity. Actual start and finish dates must be identical to the actual start and finish dates indicated on the Contractor's Short Interval Schedule submissions.

N. Recovery Schedule: Contractor's detailed schedule indicating how Contractor intends to recover lost time.

O. Network Window: Also known as "fragnets" or "hammocks", Network Windows must be provided as needed to 'explode' a section of the Official Progress Schedule to show the effects of proposed changes or delays to the schedule

1.4 INFORMATIONAL SUBMITTALS

A. Format for Submittals: Submit required submittals in the following format:

1. Working electronic copy of schedule file.
2. PDF file.
3. Two paper copies, of sufficient size to display entire period or schedule, as required.

B. Startup construction schedule.

1. Submittal of cost-loaded, startup construction schedule will not constitute approval of schedule of values for cost-loaded activities.

C. Startup Network Diagram: Of size required to display entire network for entire construction period. Show logic ties for activities.

D. Contractor's Construction Schedule: Initial schedule, of size required to display entire schedule for entire construction period.

1. Submit a working digital copy of schedule [, using the most current version of Primavera Project Planning Software to provide the CPM progress schedule,] and labeled to comply with requirements for submittals. Include type of schedule (initial or updated) and date on label.
2. All CPM schedules must be provided using the Precedence Diagramming Method (PDM).

E. CPM Reports: Concurrent with CPM schedule, submit each of the following reports. Format for each activity in reports shall contain activity number, activity description, cost and resource loading, original duration, remaining duration, early start date, early finish date, late start date, late finish date, and total float in calendar days.

1. Activity Report: List of activities sorted by activity number and then early start date, or actual start date if known.
2. Logic Report: List of preceding and succeeding activities for each activity, sorted in ascending order by activity number and then by early start date, or actual start date if known.
3. Total Float Report: List of activities sorted in ascending order of total float.
4. Earnings Report: Compilation of Contractor's total earnings from the Notice to Proceed until most recent Application for Payment.

F. Construction Schedule Updating Reports: Submit with Applications for Payment.

G. Daily Construction Reports: Submit at monthly intervals.

H. Site Condition Reports: Submit at time of discovery of differing conditions.

I. Unusual Event Reports: Submit at time of unusual event.

1.5 QUALITY ASSURANCE

A. Scheduling Professional Qualifications: An experienced specialist in CPM scheduling and reporting, with capability of producing CPM reports and diagrams within 24 hours of Architect's request.

B. Prescheduling Conference: Within seven (7) Days of the official Contract start date stated in the Notice to Proceed, conduct conference at Project site to comply with requirements in Section 013100 "Project Management and Coordination."

1. Meeting attendees shall include the following:
   a. Owner or Owner's designated representative.
   b. Contractor's Authorized Representative
   c. Contractor's Scheduler.
   d. Contractor's Quality Control Manager.
   e. Representatives from major Subcontractors and Suppliers.
   f. Any other personnel deemed advisable to attend by Owner or Contractor.

2. Review methods and procedures related to the preliminary construction schedule and Contractor's Construction Schedule, including, but not limited to, the following:

   a. Review qualifications of Contractor's scheduler.
   b. Review software limitations and content and format for reports.
   c. Verify availability of qualified personnel needed to develop and update schedule.
   d. Review schedule submittal requirements and procedures.
      1) Schedule updates
      2) Schedule revisions
      3) Recovery Schedules
   e. Discuss level of involvement of Subcontractors in the schedule development effort.
   f. Discuss constraints, including holidays, Hours of Work, work stages.
   g. Review time required for review of submittals and resubmittals.
   h. Review requirements for tests and inspections by independent testing and inspecting agencies.
   i. Review time required for Project closeout and Owner startup procedures.
   j. Review and finalize list of construction activities to be included in schedule.
   k. Review procedures for updating schedule.

1.6 COORDINATION

A. Coordinate preparation and processing of schedules and reports with performance of construction activities and with scheduling and reporting of separate contractors.

B. Coordinate Contractor's Construction Schedule with the schedule of values, list of subcontracts, submittal schedule, progress reports, payment requests, and other required schedules and reports.

1. Secure time commitments for performing critical elements of the Work from entities involved.
2. Coordinate each construction activity in the network with other activities and schedule them in proper sequence.

1.7 CONTRACTOR'S CONSTRUCTION SCHEDULE, GENERAL

A. Computer Scheduling Software: Prepare schedules using current version of a program that has been developed specifically to manage construction schedules.

B. Personnel preparing CPM Progress Schedules must be qualified and experienced in using Primavera Project Planner software to prepare Critical Path Method ("CPM") schedules and must be capable of producing the schedules and reports required by this Section. Within seven (7) Days after the official Contract start date stated in the Notice to Proceed Contractor must submit for Owner acceptance, four (4) copies of the qualifications of Contractor's proposed scheduler including references from the owner on the last three (3) recent projects where the proposed scheduler prepared the required project schedules.

1. Meetings: Scheduling consultant shall attend all meetings related to Project progress, alleged delays, and time impact.

C. Time Frame: Extend schedule from date established for the Notice to Proceed to date of final completion.

1. Contract completion date shall not be changed by submission of a schedule that shows an early completion date, unless specifically authorized by Change Order.
2. The Project Time for completion of the entire Project, including Milestone activities, shall adhere to the start and finish times stated in the Contract Documents, unless Contractor formally requests and the Owner approves in writing earlier (advanced) time(s) of completion. Approval of such request shall be at Owner's discretion and shall be in the form of a Change Order.

D. Activities: Comply with the following:

1. Activity Duration: Define activities so no activity is longer than 15 days, unless specifically allowed by Architect.
2. Procurement Activities: Include procurement process activities for the following long lead items and major items, requiring a cycle of more than 60 days, as separate activities in schedule. Procurement cycle activities include, but are not limited to, submittals, approvals, purchasing, fabrication, and delivery.
3. Submittal Review Time: Include review and resubmittal times indicated in Section 013300 "Submittal Procedures" in schedule. Coordinate submittal review times in Contractor's Construction Schedule with submittal schedule.
4. Startup and Testing Time: Include no fewer than 15 days for startup and testing.
5. Commissioning Time: Include no fewer than 15 days for commissioning.
6. Substantial Completion: Indicate completion in advance of date established for Substantial Completion, and allow time for Architect's administrative procedures necessary for certification of Substantial Completion.
7. Punch List and Final Completion: Include not more than 45 days for completion of punch list items and final completion.
8. Contingency activities are not allowed and shall not be included.

E. Constraints: Include constraints and work restrictions indicated in the Contract Documents and as follows in schedule, and show how the sequence of the Work is affected.

1. Work Restrictions: Show the effect of the following items on the schedule:

a. Coordination with existing construction.
b. Limitations of continued occupancies.
c. Uninterruptible services.

d. Use-of-premises restrictions.
e. Seasonal variations.
f. Environmental control.

2. Work Stages: Indicate important stages of construction for each major portion of the Work, including, but not limited to, the following:

a. Subcontract awards.
b. Submittals.
c. Purchases.
d. Mockups.
e. Fabrication.
f. Sample testing.
g. Deliveries.
h. Installation.
i. Tests and inspections.
j. Adjusting.
k. Curing.
l. Startup and placement into final use and operation.
m. Commissioning.

3. Construction Areas: Identify each major area of construction for each major portion of the Work. Indicate where each construction activity within a major area must be sequenced or integrated with other construction activities to provide for the following:

a. Temporary enclosure.
b. Permanent space enclosure.
c. Completion of mechanical work.
d. Completion of electrical work.
e. Substantial Completion.

F. Milestones: Include milestones indicated in the Contract Documents in schedule, including, but not limited to, the Notice to Proceed, Substantial Completion, and final completion.

G. Cost Correlation: Superimpose a cost correlation timeline, indicating planned and actual costs. On the line, show planned and actual dollar volume of the Work performed as of planned and actual dates used for preparation of payment requests.

1. See Section 012900 "Payment Procedures" for cost reporting and payment procedures.

H. Upcoming Work Summary: Prepare summary report indicating activities scheduled to occur or commence prior to submittal of next schedule update. Summarize the following issues:

1. Unresolved issues.
2. Unanswered Requests for Information.
3. Rejected or unreturned submittals.
4. Notations on returned submittals.
5. Pending modifications affecting the Work and the Contract Time.

I. Contractor's Construction Schedule Updating: At monthly intervals, update schedule to reflect actual construction progress and activities. Issue schedule one week before each regularly scheduled progress meeting.

1. Revise schedule immediately after each meeting or other activity where revisions have been recognized or made. Issue updated schedule concurrently with the report of each such meeting.
2. Include a report with updated schedule that indicates every change, including, but not limited to, changes in logic, durations, actual starts and finishes, and activity durations.
3. As the Work progresses, indicate final completion percentage for each activity.

J. Recovery Schedule: When periodic update indicates the Work is 14 or more calendar days behind the current approved schedule, submit a separate recovery schedule indicating means by which Contractor intends to regain compliance with the schedule. Indicate changes to working hours, working days, crew sizes, equipment required to achieve compliance, and date by which recovery will be accomplished.

K. Distribution: Distribute copies of approved schedule to Architect, Owner, separate contractors, testing and inspecting agencies, and other parties identified by Contractor with a need-to-know schedule responsibility.

1. Post copies in Project meeting rooms and temporary field offices.
2. When revisions are made, distribute updated schedules to the same parties and post in the same locations. Delete parties from distribution when they have completed their assigned portion of the Work and are no longer involved in performance of construction activities.

L. Failure of the Official Progress Schedule to include an element of the Work required for performance of this Contract, or an inaccuracy in Official Progress Schedule, shall not relieve the Contractor from responsibility for accomplishing all activities required to complete the Work of this Project and shall not constitute grounds for a claim for delay in the execution of the Work.

M. Failure of Contractor to substantially comply with requirements of this Section 013200 shall constitute a failure by Contractor to prosecute Work with such diligence as will ensure its completion within the Contract Time and may be considered grounds for termination or other remedy by Owner pursuant to terms of this Contract.

1.8 STARTUP CONSTRUCTION SCHEDULE

A. Gantt-Chart Schedule: Submit startup, horizontal, Gantt-chart-type construction schedule within seven days of date established for the Notice to Proceed.

B. Preparation: Indicate each significant construction activity separately. Identify first workday of each week with a continuous vertical line. Outline significant construction activities for first 90 days of construction. Include skeleton diagram for the remainder of the Work and a cash requirement prediction based on indicated activities.

1.9 GANTT-CHART SCHEDULE REQUIREMENTS

A. Gantt-Chart Schedule: Submit a comprehensive, fully developed, horizontal, Gantt-chart-type, Contractor's Construction Schedule within 7 days of date established for commencement of the Work.

1. Base schedule on the startup construction schedule and additional information received since the start of Project.

B. Preparation: Indicate each significant construction activity separately. Identify first workday of each week with a continuous vertical line.

1. For construction activities that require three months or longer to complete, indicate an estimated completion percentage in 10 percent increments within time bar.

1.10 CPM SCHEDULE REQUIREMENTS

A. General: Prepare network diagrams using AON (activity-on-node) format.

B. Startup Network Diagram: Submit diagram within [14] <Insert number> days of date established for [commencement of the Work] [the Notice to Proceed] [the Notice of Award]. Outline significant construction activities for the first [90] <Insert number> days of construction. Include skeleton diagram for the remainder of the Work and a cash requirement prediction based on indicated activities.

C. CPM Schedule: Prepare Contractor's Construction Schedule using a cost- and resource-loaded, time-scaled CPM network analysis diagram for the Work.

1. Develop network diagram in sufficient time to submit CPM schedule so it can be accepted for use no later than [60] <Insert number> days after date established for [commencement of the Work] [the Notice to Proceed] [the Notice of Award].

a. Failure to include any work item required for performance of this Contract shall not excuse Contractor from completing all work within applicable completion dates.

2. Conduct educational workshops to train and inform key Project personnel, including subcontractors' personnel, in proper methods of providing data and using CPM schedule information.
3. Establish procedures for monitoring and updating CPM schedule and for reporting progress. Coordinate procedures with progress meeting[and payment request dates].
4. Use "one workday" as the unit of time for individual activities. Indicate nonworking days and holidays incorporated into the schedule to coordinate with the Contract Time.

D. CPM Schedule Preparation: Prepare a list of all activities required to complete the Work. Using the startup network diagram, prepare a skeleton network to identify probable critical paths.

1. Activities: Indicate the estimated time duration, sequence requirements, and relationship of each activity in relation to other activities. Include estimated time frames for the following activities:

a. Preparation and processing of submittals.
b. Mobilization and demobilization.
c. Purchase of materials.
d. Delivery.
e. Fabrication.
f. Utility interruptions.
g. Installation.
h. Work by Owner that may affect or be affected by Contractor's activities.
i. Testing and inspection.
j. Commissioning.
k. Punch list and final completion.
l. Activities occurring following final completion.

2. Critical Path Activities: Identify critical path activities, including those for interim completion dates. Scheduled start and completion dates shall be consistent with Contract milestone dates.
3. Processing: Process data to produce output data on a computer-drawn, time-scaled network. Revise data, reorganize activity sequences, and reproduce as often as necessary to produce the CPM schedule within the limitations of the Contract Time.
4. Format: Mark the critical path. Locate the critical path near center of network; locate paths with most float near the edges.

    a. Subnetworks on separate sheets are permissible for activities clearly off the critical path.

5. Cost- and Resource-Loading of CPM Schedule: Assign cost to construction activities on the CPM schedule. Do not assign costs to submittal activities. Obtain Architect's approval prior to assigning costs to fabrication and delivery activities. Assign costs under main subcontracts for testing and commissioning activities, operation and maintenance manuals, punch list activities, Project record documents, [sustainable design documentation,]and demonstration and training (if applicable), in the amount of [5] <Insert number> percent of the Contract Sum.

    a. Each activity cost shall reflect an appropriate value subject to approval by Architect.
    b. Total cost assigned to activities shall equal the total Contract Sum.

E. Contract Modifications: For each proposed contract modification and concurrent with its submission, prepare a time-impact analysis using a network fragment to demonstrate the effect of the proposed change on the overall Project schedule.

F. Initial Issue of Schedule: Prepare initial network diagram from a sorted activity list indicating straight "early start-total float." Identify critical activities. Prepare tabulated reports showing the following:

1. Contractor or subcontractor and the Work or activity.
2. Description of activity.
3. Main events of activity.
4. Immediate preceding and succeeding activities.
5. Early and late start dates.
6. Early and late finish dates.
7. Activity duration in workdays.
8. Total float or slack time.
9. Average size of workforce.
10. Dollar value of activity (coordinated with the schedule of values).

G. Schedule Updating: Concurrent with making revisions to schedule, prepare tabulated reports showing the following:

1. Identification of activities that have changed.
2. Changes in early and late start dates.
3. Changes in early and late finish dates.
4. Changes in activity durations in workdays.
5. Changes in the critical path.
6. Changes in total float or slack time.
7. Changes in the Contract Time.

H. Value Summaries: Prepare two cumulative value lists, sorted by finish dates.

1. In first list, tabulate activity number, early finish date, dollar value, and cumulative dollar value.
2. In second list, tabulate activity number, late finish date, dollar value, and cumulative dollar value.
3. In subsequent issues of both lists, substitute actual finish dates for activities completed as of list date.
4. Prepare list for ease of comparison with payment requests; coordinate timing with progress meetings.

    a. In both value summary lists, tabulate "actual percent complete" and "cumulative value completed" with total at bottom.
    b. Submit value summary printouts [one week] <Insert time> before each regularly scheduled progress meeting.

1.11 REPORTS

A. Daily Construction Reports: Prepare a daily construction report recording the following information concerning events at Project site:

1. List of subcontractors at Project site.
2. List of separate contractors at Project site.
3. Approximate count of personnel at Project site.
4. Equipment at Project site.
5. Material deliveries.
6. High and low temperatures and general weather conditions, including presence of rain or snow.
7. Testing and inspection.
8. Accidents.
9. Meetings and significant decisions.
10. Unusual events.
11. Stoppages, delays, shortages, and losses.
12. Meter readings and similar recordings.
13. Emergency procedures.
14. Orders and requests of authorities having jurisdiction.
15. Change Orders received and implemented.
16. Construction Change Directives received and implemented.
17. Services connected and disconnected.
18. Equipment or system tests and startups.
19. Partial completions and occupancies.
20. Substantial Completions authorized.

B. Material Location Reports: At intervals of every two weeks, prepare and submit a comprehensive list of materials delivered to and stored at Project site. List shall be cumulative, showing materials previously reported plus items recently delivered. Include with list a statement of progress on and delivery dates for materials or items of equipment fabricated or stored away from Project site. Indicate the following categories for stored materials:

1. Material stored prior to previous report and remaining in storage.
2. Material stored prior to previous report and since removed from storage and installed.
3. Material stored following previous report and remaining in storage.

C. Site Condition Reports: Immediately on discovery of a difference between site conditions and the Contract Documents, prepare and submit a detailed report. Submit with a Request for Information. Include a detailed description of the differing conditions, together with recommendations for changing the Contract Documents.

D. Unusual Event Reports: When an event of an unusual and significant nature occurs at Project site, whether or not related directly to the Work, prepare and submit a special report. List chain of events, persons participating, responses by Contractor's personnel, evaluation of results or effects, and similar pertinent information. Advise Owner in advance when these events are known or predictable.

1. Submit unusual event reports directly to Owner within [one] <Insert number> day(s) of an occurrence. Distribute copies of report to parties affected by the occurrence.

PART 2 - PRODUCTS (Not Used)

PART 3 - EXECUTION (Not Used)

END OF SECTION **013200**

THIS SHEET INTENTIONALLY LEFT BLANK

SECTION 013233 - PHOTOGRAPHIC DOCUMENTATION

PART 1 - GENERAL

1.1 RELATED DOCUMENTS

A. Drawings and general provisions of the Contract, including General and Supplementary Conditions and other Division 01 Specification Sections, apply to this Section.

1.2 SUMMARY

A. Section includes administrative and procedural requirements for the following:

1. Preconstruction photographs.
2. Periodic construction photographs.
3. Final completion construction photographs.
4. Preconstruction video recordings.

B. Related Requirements:

1. Section 017700 "Closeout Procedures" for submitting photographic documentation as Project Record Documents at Project closeout.
2. Section 024119 "Selective Demolition" for photographic documentation before selective demolition operations commence.

1.3 INFORMATIONAL SUBMITTALS

A. Key Plan: Submit key plan of Project site and building with notation of vantage points marked for location and direction of each photograph and video recording. Indicate elevation or story of construction. Include same information as corresponding photographic documentation.

B. Digital Photographs: Submit image files within seven (7) days of taking photographs.

1. Submit photos by uploading to web-based project software site. Include copy of key plan indicating each photograph's location and direction.
2. Identification: Provide the following information with each image description in file metadata tag:

a. Name of Project.
b. Name of Contractor.
c. Date photograph was taken.
d. Description of location, vantage point, and direction.
e. Unique sequential identifier keyed to accompanying key plan.

C. Video Recordings: Submit video recordings within seven (7) days of recording.

1. Submit video recordings on thumb drive or by uploading to web-based project software site. Include copy of key plan indicating each video's location and direction.
2. Identification: With each submittal, provide the following information on web-based project software site:

a. Name of Project.
b. Name of Contractor.
c. Date video recording was recorded.
d. Description of vantage point, indicating location, direction (by compass point), and elevation or story of construction.

1.4 QUALITY ASSURANCE

A. Photographer Qualifications: An individual who has been regularly engaged as a professional photographer of construction projects for not less than three years.

1.5 FORMATS AND MEDIA

A. Digital Photographs: Provide color images in JPG format, produced by a digital camera with minimum sensor size of 12 megapixels, and at an image resolution of not less than 3200 by 2400 pixels. Use flash in low light levels or backlit conditions.

B. Digital Video Recordings: Provide high-resolution, digital video in MPEG format, produced by a digital camera with minimum sensor resolution of 12 megapixels and capable of recording in full high-definition mode with vibration-reduction technology. Provide supplemental lighting in low light levels or backlit conditions.

C. Digital Images: Submit digital media as originally recorded in the digital camera, without alteration, manipulation, editing, or modifications using image-editing software.

D. Metadata: Record accurate date and time from camera.

E. File Names: Name media files with date, Project area and sequential numbering suffix.

1.6 CONSTRUCTION PHOTOGRAPHS

A. General: Take photographs with maximum depth of field and in focus.

1. Maintain key plan with each set of construction photographs that identifies each photographic location.

B. Preconstruction Photographs: Before commencement of demolition, take photographs of Project site and surrounding properties, including existing items to remain during construction, from different vantage points, as directed by Architect.

1. Flag construction limits before taking construction photographs.
2. Take minimum of 20 photographs to show existing conditions adjacent to property before starting the Work.
3. Take minimum of 20 photographs of existing buildings either on or adjoining property to accurately record physical conditions at start of construction.
4. Take additional photographs as required to record settlement or cracking of adjacent structures, pavements, and improvements.

C. Periodic Construction Photographs: Take minimum 20 photographs monthly coinciding with the cutoff date associated with each Application for Payment. Select vantage points to show status of construction and progress since last photographs were taken.

D. Time-Lapse Sequence Construction Photographs: Take 8 photographs as indicated, to show status of construction and progress since last photographs were taken.

1. Frequency: Take photographs weekly, on the same day each week.
2. Vantage Points: Following suggestions by Architect and Contractor, photographer to select vantage points. During each of the following construction phases, take not less than six of the required shots from same vantage point each time to create a time-lapse sequence as follows:

a. Commencement of the Work, through completion of demolition.
b. Insulation & cover board installation.
c. Base roofing layer.
d. Flashing.
e. Roof top sheet.

E. Final Completion Construction Photographs: Take 20 photographs after date of Substantial Completion for submission as Project Record Documents. Architect will inform photographer of desired vantage points.

F. Additional Photographs: Architect may request photographs in addition to periodic photographs specified. Additional photographs will be paid for by Change Order and are not included in the Contract Sum.

1. Three days notice will be given, where feasible.
2. In emergency situations, take additional photographs within 24 hours of request.
3. Circumstances that could require additional photographs include, but are not limited to, the following:

a. Special events planned at Project site.
b. Immediate follow-up when on-site events result in construction damage or losses.
c. Photographs to be taken at fabrication locations away from Project site. These photographs are not subject to unit prices or unit-cost allowances.
d. Substantial Completion of a major phase or component of the Work.
e. Extra record photographs at time of final acceptance.
f. Owner's request for special publicity photographs.

1.7 CONSTRUCTION VIDEO RECORDINGS

A. Video Recording Photographer: Engage a qualified videographer to record construction video recordings.

B. Preconstruction Video Recording: Before starting demolition, record video of all roof drain piping from roof to main storm drain line and out to six feet from edge of building.

C. Periodic Construction Video Recordings: Not Required

D. Time-Lapse Sequence Construction Video Recordings: Not Required.

1.8 CONSTRUCTION WEBCAM

A. Not Required.

PART 2 - PRODUCTS (Not Used)

PART 3 - EXECUTION (Not Used)

END OF SECTION **013233**

SECTION 013300 - SUBMITTAL PROCEDURES

PART 1 - GENERAL

1.1 SUMMARY

A. Section Includes:

1. Submittal schedule requirements.
2. Administrative and procedural requirements for submittals.

1.2 DEFINITIONS

A. Action Submittals: Written and graphic information and physical samples that require Architect's responsive action. Action submittals are those submittals indicated in individual Specification Sections as "action submittals."

B. Informational Submittals: Written and graphic information and physical samples that do not require Architect's responsive action. Submittals may be rejected for not complying with requirements. Informational submittals are those submittals indicated in individual Specification Sections as "informational submittals."

1.3 SUBMITTAL SCHEDULE

A. Submittal Schedule: Submit, as an action submittal, a list of submittals, arranged in chronological order by dates required by construction schedule. Include time required for review, ordering, manufacturing, fabrication, and delivery when establishing dates. Include additional time required for making corrections or revisions to submittals noted by Architect and additional time for handling and reviewing submittals required by those corrections.

1.4 SUBMITTAL FORMATS

A. Submittal Information: Include the following information in each submittal:

1. Project name.
2. Date.
3. Name of Architect.
4. Name of Contractor.
5. Name of firm or entity that prepared submittal.
6. Names of subcontractor, manufacturer, and supplier.
7. Number and title of Specification Section, with paragraph number and generic name for each of multiple items.
8. Location(s) where product is to be installed, as appropriate.
9. Other necessary identification.
10. Remarks.

B. Options: Identify options requiring selection by Architect.

C. Deviations and Additional Information: On each submittal, clearly indicate deviations from requirements in the Contract Documents, including minor variations and limitations; include relevant additional information and revisions, other than those requested by Architect on previous submittals. Indicate by highlighting on each submittal or noting on attached separate sheet.

D. Electronic Submittals: Prepare submittals as PDF package, incorporating complete information into each PDF file. Name PDF file with submittal number.

E. Submittals for Utilizing Web-Based Project Management Software: Prepare submittals as PDF files, or other format indicated by Project management software.

1.5 SUBMITTAL PROCEDURES

A. Prepare and submit submittals required by individual Specification Sections. Types of submittals are indicated in individual Specification Sections.
   1. Web-Based Project Management Software: Prepare submittals in PDF form, and upload to web-based Project management software website. Enter required data in web-based software site to fully identify submittal.

B. Architect's Digital Data Files: Electronic copies of CAD Drawings of the Contract Drawings may be provided by Architect, at the Contractor's written request, for Contractor's use in preparing submittals.

   1. Architect will furnish, at their discretion, digital data drawing files of the Contract Drawings requested in writing by the Contractor for use in preparing Shop Drawings.

      a. Architect makes no representations as to the accuracy or completeness of digital data drawing files as they relate to the Contract Drawings.
      b. Contractor shall execute an Electronic Data Licensing agreement. Form of agreement shall be provided by the Architect at time of Contractor's written request.

C. Coordination: Coordinate preparation and processing of submittals with performance of construction activities.

   1. Coordinate each submittal with fabrication, purchasing, testing, delivery, other submittals, and related activities that require sequential activity.
   2. Submit all submittal items required for each Specification Section concurrently unless partial submittals for portions of the Work are indicated on approved submittal schedule.
   3. Submit action submittals and informational submittals required by the same Specification Section as separate packages under separate transmittals.

D. Processing Time: Allow time for submittal review, including time for resubmittals, as follows. Time for review shall commence on Architect's receipt of submittal. No extension of the Contract Time will be authorized because of failure to transmit submittals enough in advance of the Work to permit processing, including resubmittals.

   1. Initial Review: Allow 15 days for initial review of each submittal. Allow additional time if coordination with subsequent submittals is required. Architect will advise Contractor when a submittal being processed must be delayed for coordination.
   2. Resubmittal Review: Allow 15 days for review of each resubmittal.

E. Resubmittals: Make resubmittals in same form as initial submittal.

F. Distribution: Furnish copies of final submittals to manufacturers, subcontractors, suppliers, fabricators, installers, authorities having jurisdiction, and others as necessary for performance of construction activities. Show distribution on transmittal forms.

G. Use for Construction: Retain complete copies of submittals on Project site. Use only final action submittals that are marked with approval notation from Architect's action stamp and/or transmittal.

1.6 SUBMITTAL REQUIREMENTS

A. Product Data: Collect information into a single submittal for each element of construction and type of product or equipment.

1. If information must be specially prepared for submittal because standard published data are unsuitable for use, submit as Shop Drawings, not as Product Data.
2. Mark each submittal to show which products and options are applicable.
3. Include the following information, as applicable:

   a. Manufacturer's catalog cuts.
   b. Manufacturer's product specifications.
   c. Manufacturer's written recommendations.
   d. Manufacturer's installation instructions.
   e. Standard color charts.
   f. Statement of compliance with specified referenced standards.
   g. Testing by recognized testing agency.
   h. Application of testing agency labels and seals.
   i. Notation of coordination requirements.
   j. Availability and delivery time information.

4. For equipment, include the following in addition to the above, as applicable:

   a. Wiring diagrams that show factory-installed wiring.
   b. Printed performance curves.
   c. Operational range diagrams.
   d. Clearances required to other construction, if not indicated on accompanying Shop Drawings.

5. Submit Product Data before Shop Drawings, and before or concurrent with Samples.

B. Shop Drawings: Prepare Project-specific information, drawn accurately to scale. Do not base Shop Drawings on reproductions of the Contract Documents or standard printed data.

1. Preparation: Fully illustrate requirements in the Contract Documents. Include the following information, as applicable:

   a. Identification of products.
   b. Dimensions.
   c. Fabrication and installation drawings.
   d. Roughing-in and setting diagrams.
   e. Wiring diagrams showing field-installed wiring, including power, signal and control wiring.
   f. Shopwork manufacturing instructions.
   g. Templates and patterns.
   h. Schedules.

i. Compliance with specified standards.
j. Notation of coordination requirements.
k. Notation of dimensions established by field measurement.
l. Relationship and attachment to adjoining construction clearly indicated.
m. Seal and signature of professional engineer if specified.

2. Sheet Size: Except for templates, patterns, and similar full-size Drawings, format Shop Drawings on sheets at least 8-1/2 by 11 inches, but no larger than 24 by 36 inches.

C. Samples: Submit Samples for review of kind, color, pattern, and texture for a check of these characteristics with other materials.

1. Transmit Samples that contain multiple, related components such as accessories together in one submittal package.
2. Identification: Permanently attach label on unexposed side of Samples that includes the following:

a. Project name and submittal number.
b. Generic description of Sample.
c. Product name and name of manufacturer.
d. Sample source.
e. Number and title of applicable Specification Section.
f. Specification paragraph number and generic name of each item.

3. Email Transmittal: Provide PDF transmittal. Include digital image file illustrating Sample characteristics, and identification information for record.
4. Web-Based Project Management Software: Prepare submittals in PDF form, and upload to web-based Project software website. Enter required data in web-based software site to fully identify submittal.
5. Paper Transmittal: Include paper transmittal including complete submittal information indicated.
6. Disposition: Maintain sets of approved Samples at Project site, available for quality-control comparisons throughout the course of construction activity. Sample sets may be used to determine final acceptance of construction associated with each set.

a. Samples that may be incorporated into the Work are indicated in individual Specification Sections. Such Samples must be in an undamaged condition at time of use.
b. Samples not incorporated into the Work, or otherwise designated as Owner's property, are the property of Contractor.

7. Samples for Initial Selection: Submit manufacturer's physical color charts consisting of units or sections of units showing the full range of colors, textures, and patterns available.

a. Number of Samples: Submit one full set(s) of available choices where color, pattern, texture, or similar characteristics are required to be selected from manufacturer's product line. Architect will return submittal electronically with options selected.

8. Samples for Verification: Submit full-size units or Samples of size indicated, prepared from same material to be used for the Work, cured and finished in manner specified, and physically identical with material or product proposed for use, and that show full range of color and texture variations expected. Samples include, but are not limited to, the following: partial sections of manufactured or fabricated components; small cuts or containers of materials; complete units of repetitively used materials; swatches showing color, texture, and pattern; color range sets; and components used for independent testing and inspection.

    a. Number of Samples: Submit two (2) sets of Samples. Architect will retain one (1) Sample sets; remainder will be returned. Mark up and retain one returned Sample set as a project record Sample.

        1) Submit a single Sample where assembly details, workmanship, fabrication techniques, connections, operation, and other similar characteristics are to be demonstrated.
        2) If variation in color, pattern, texture, or other characteristic is inherent in material or product represented by a Sample, submit at least three sets of paired units that show approximate limits of variations.

9. It is a request of this Contract for the General Contractor to provide all color samples of all items to be selected to the Architect before action can be taken on selection of colors/finishes. Upon receipt of the complete package, the Architect shall provide final selections within 45 days. The General Contractor shall allow sufficient time for this to take place in his schedule.

D. Product Schedule: As required in individual Specification Sections, prepare a written summary indicating types of products required for the Work and their intended location. Include the following information in tabular form:

E. Qualification Data: Prepare written information that demonstrates capabilities and experience of firm or person. Include lists of completed projects with project names and addresses, contact information of architects and owners, and other information specified.

F. Design Data: Prepare and submit written and graphic information indicating compliance with indicated performance and design criteria in individual Specification Sections. Include list of assumptions and summary of loads. Include load diagrams if applicable. Provide name and version of software, if any, used for calculations. Number each page of submittal.

G. Certificates:

1. Certificates and Certifications Submittals: Submit a statement that includes signature of entity responsible for preparing certification. Certificates and certifications shall be signed by an officer or other individual authorized to sign documents on behalf of that entity. Provide a notarized signature where indicated.
2. Installer Certificates: Submit written statements on manufacturer's letterhead certifying that Installer complies with requirements in the Contract Documents and, where required, is authorized by manufacturer for this specific Project.
3. Manufacturer Certificates: Submit written statements on manufacturer's letterhead certifying that manufacturer complies with requirements in the Contract Documents. Include evidence of manufacturing experience where required.
4. Material Certificates: Submit written statements on manufacturer's letterhead certifying that material complies with requirements in the Contract Documents.
5. Product Certificates: Submit written statements on manufacturer's letterhead certifying that product complies with requirements in the Contract Documents.

6. Welding Certificates: Prepare written certification that welding procedures and personnel comply with requirements in the Contract Documents. Submit record of Welding Procedure Specification and Procedure Qualification Record on AWS forms. Include names of firms and personnel certified.

H. Test and Research Reports:

1. Compatibility Test Reports: Submit reports written by a qualified testing agency, on testing agency's standard form, indicating and interpreting results of compatibility tests performed before installation of product. Include written recommendations for substrate preparation and primers required.
2. Field Test Reports: Submit written reports indicating and interpreting results of field tests performed either during installation of product or after product is installed in its final location, for compliance with requirements in the Contract Documents.
3. Material Test Reports: Submit reports written by a qualified testing agency, on testing agency's standard form, indicating and interpreting test results of material for compliance with requirements in the Contract Documents.
4. Preconstruction Test Reports: Submit reports written by a qualified testing agency, on testing agency's standard form, indicating and interpreting results of tests performed before installation of product, for compliance with performance requirements in the Contract Documents.
5. Product Test Reports: Submit written reports indicating that current product produced by manufacturer complies with requirements in the Contract Documents. Base reports on evaluation of tests performed by manufacturer and witnessed by a qualified testing agency, or on comprehensive tests performed by a qualified testing agency.
6. Research Reports: Submit written evidence, from a model code organization acceptable to authorities having jurisdiction, that product complies with building code in effect for Project. Include the following information:

   a. Name of evaluation organization.
   b. Date of evaluation.
   c. Time period when report is in effect.
   d. Product and manufacturers' names.
   e. Description of product.
   f. Test procedures and results.
   g. Limitations of use.

1.7 DELEGATED-DESIGN SERVICES

A. Performance and Design Criteria: Where professional design services or certifications by a design professional are specifically required of Contractor by the Contract Documents, provide products and systems complying with specific performance and design criteria indicated.

1. If criteria indicated are insufficient to perform services or certification required, submit a written request for additional information to Architect.

B. Delegated-Design Services Certification: In addition to Shop Drawings, Product Data, and other required submittals, submit digitally signed PDF file of certificate, signed and sealed by the responsible design professional, for each product and system specifically assigned to Contractor to be designed or certified by a design professional.

1. Indicate that products and systems comply with performance and design criteria in the Contract Documents. Include list of codes, loads, and other factors used in performing these services.

1.8 CONTRACTOR'S REVIEW

A. Action Submittals and Informational Submittals: Review each submittal and check for coordination with other Work of the Contract and for compliance with the Contract Documents. Note corrections and field dimensions. Mark with approval stamp before submitting to Architect.

B. Contractor's Approval: Indicate Contractor's approval for each submittal with a uniform approval stamp. Include name of reviewer, date of Contractor's approval, and statement certifying that submittal has been reviewed, checked, and approved for compliance with the Contract Documents.

1. Architect will not review submittals received from Contractor that do not have Contractor's review and approval.

1.9 ARCHITECT'S AND CONSTRUCTION MANAGER'S REVIEW

A. Action Submittals: Architect will review each submittal, indicate corrections or revisions required, and return it.

1. PDF Submittals: Architect will indicate, via markup on each submittal, the appropriate action, as follows:

a. Reviewed, No Exceptions.
b. Reviewed, Note Comments.
c. Revise and Resubmit.
d. Revise and Partial Resubmit
e. Rejected, Resubmit.

Review is only for general conformance with the design concept and the information in the Contract Documents. Comments made as part of this review do not relieve Contractor from compliance with the Contract Documents, applicable codes, and laws, all of which have priority over this submittal. Architect does not warrant or represent that the information within the submittal is either accurate or complete. Contractor is responsible for: all dimensions, quantities, and performance requirements, which shall be confirmed and correlated at the job site; all information that pertains soley to fabrication processes or to techniques of construction; all coordination of the Work with that of other trades; and performing the Work in a satisfactory manner.

2. Submittals by Web-Based Project Management Software: Architect will indicate, on Project management software website, the appropriate action.

B. Informational Submittals: Architect will review each submittal and will not return it, or will return it if it does not comply with requirements. Architect will forward each submittal to appropriate party.

C. Incomplete submittals are unacceptable, will be considered nonresponsive, and will be returned for resubmittal without review.

D. Architect will return without review submittals received from sources other than Contractor.

E. Submittals not required by the Contract Documents will be returned by Architect without action.

PART 2 - PRODUCTS (Not Used)

PART 3 - EXECUTION (Not Used)

END OF SECTION **013300**

SECTION 01 40 00 - QUALITY REQUIREMENTS

PART 1 - GENERAL

1.1 SUMMARY

A. Section includes administrative and procedural requirements for quality assurance and quality control.

B. Testing and inspection services are required to verify compliance with requirements specified or indicated. These services do not relieve Contractor of responsibility for compliance with the Contract Document requirements.

1. Specified tests, inspections, and related actions do not limit Contractor's other quality-assurance and quality-control procedures that facilitate compliance with the Contract Document requirements.
2. Requirements for Contractor to provide quality-assurance and quality-control services required by Architect, Owner, or authorities having jurisdiction are not limited by provisions of this Section.

1.2 DELEGATED DESIGN SERVICES

A. Performance and Design Criteria: Where professional design services or certifications by a design professional are specifically required of Contractor by the Contract Documents, provide products and systems complying with specific performance and design criteria indicated.

1. If criteria indicated are not sufficient to perform services or certification required, submit a written request for additional information to Architect.

1.3 CONFLICTING REQUIREMENTS

A. Conflicting Standards and Other Requirements: If compliance with two or more standards or requirements is specified and the standards or requirements establish different or conflicting requirements for minimum quantities or quality levels, inform the Architect regarding the conflict and obtain clarification prior to proceeding with the Work. Refer conflicting requirements that are different, but apparently equal, to Architect for clarification before proceeding.

B. Minimum Quantity or Quality Levels: The quantity or quality level shown or specified is the minimum provided or performed. The actual installation may comply exactly with the minimum quantity or quality specified, or it may exceed the minimum within reasonable limits. To comply with these requirements, indicated numeric values are minimum or maximum, as appropriate, for the context of requirements. Refer uncertainties to Architect for a decision before proceeding.

1.4 INFORMATIONAL SUBMITTALS

A. Permits, Licenses, and Certificates: For Owner's record, submit copies of permits, licenses, certifications, inspection reports, releases, jurisdictional settlements, notices, receipts for fee payments, judgments, correspondence, records, and similar documents established for compliance with standards and regulations bearing on performance of the Work.

1.5 REPORTS AND DOCUMENTS

A. Test and Inspection Reports: Prepare and submit certified written reports specified in other Sections. Include the following:

1. Date of issue.
2. Project title and number.
3. Name, address, telephone number, and email address of testing agency.
4. Dates and locations of samples and tests or inspections.
5. Names of individuals making tests and inspections.
6. Description of the Work and test and inspection method.
7. Identification of product and Specification Section.
8. Complete test or inspection data.
9. Test and inspection results and an interpretation of test results.
10. Record of temperature and weather conditions at time of sample-taking and testing and inspection.
11. Comments or professional opinion on whether tested or inspected Work complies with the Contract Document requirements.
12. Name and signature of laboratory inspector.
13. Recommendations on retesting and reinspecting.

B. Manufacturer's Technical Representative's Field Reports: Prepare written information documenting manufacturer's technical representative's tests and inspections specified in other Sections. Include the following:

1. Statement on condition of substrates and their acceptability for installation of product.
2. Statement that products at Project site comply with requirements.
3. Summary of installation procedures being followed, whether they comply with requirements and, if not, what corrective action was taken.
4. Results of operational and other tests and a statement of whether observed performance complies with requirements.
5. Other required items indicated in individual Specification Sections.

C. Factory-Authorized Service Representative's Reports: Prepare written information documenting manufacturer's factory-authorized service representative's tests and inspections specified in other Sections. Include the following:

1. Statement that equipment complies with requirements.
2. Results of operational and other tests and a statement of whether observed performance complies with requirements.
3. Other required items indicated in individual Specification Sections.

1.6 QUALITY ASSURANCE

A. Qualifications paragraphs in this article establish the minimum qualification levels required; individual Specification Sections specify additional requirements.

B. Manufacturer Qualifications: A firm experienced in manufacturing products or systems similar to those indicated for this Project and with a record of successful in-service performance, as well as sufficient production capacity to produce required units. As applicable, procure products from manufacturers able to meet qualification requirements, warranty requirements, and technical or factory-authorized service representative requirements.

C. Fabricator Qualifications: A firm experienced in producing products similar to those indicated for this Project and with a record of successful in-service performance, as well as sufficient production capacity to produce required units.

D. Installer Qualifications: A firm or individual experienced in installing, erecting, applying, or assembling work similar in material, design, and extent to that indicated for this Project, whose work has resulted in construction with a record of successful in-service performance.

E. Testing and Inspecting Agency Qualifications: An NRTL, an NVLAP, or an independent agency with the experience and capability to conduct testing and inspection indicated, as documented according to [ASTM E329] <Insert standard> and with additional qualifications specified in individual Sections; and, where required by authorities having jurisdiction, that is acceptable to authorities.

1.7 QUALITY CONTROL

A. Owner Responsibilities: Where quality-control services are indicated as Owner's responsibility, Owner will engage a qualified testing agency to perform these services.

1. Owner will furnish Contractor with names, addresses, and telephone numbers of testing agencies engaged and a description of types of testing and inspection they are engaged to perform.
2. Costs for retesting and reinspecting construction that replaces or is necessitated by Work that failed to comply with the Contract Documents will be charged to Contractor.

B. Contractor Responsibilities: Tests and inspections not explicitly assigned to Owner are Contractor's responsibility. Perform additional quality-control activities, whether specified or not, to verify and document that the Work complies with requirements.

1. Engage a qualified testing agency to perform quality-control services.

   a. Contractor will not employ same entity engaged by Owner, unless agreed to in writing by Owner.

2. Notify testing agencies at least 24 hours in advance of time when Work that requires testing or inspection will be performed.
3. Where quality-control services are indicated as Contractor's responsibility, submit a certified written report, in duplicate, of each quality-control service.
4. Testing and inspection requested by Contractor and not required by the Contract Documents are Contractor's responsibility.
5. Submit additional copies of each written report directly to authorities having jurisdiction, when they so direct.

C. Retesting/Reinspecting: Regardless of whether original tests or inspections were Contractor's responsibility, provide quality-control services, including retesting and reinspecting, for construction that replaced Work that failed to comply with the Contract Documents.

D. Testing Agency Responsibilities: Cooperate with Architect and Contractor in performance of duties. Provide qualified personnel to perform required tests and inspections.

1. Notify Architect and Contractor promptly of irregularities or deficiencies observed in the Work during performance of its services.
2. Determine the locations from which test samples will be taken and in which in-situ tests are conducted.
3. Conduct and interpret tests and inspections, and state in each report whether tested and inspected Work complies with or deviates from requirements.
4. Submit a certified written report, in duplicate, of each test, inspection, and similar quality-control service through Contractor.
5. Do not release, revoke, alter, or increase the Contract Document requirements or approve or accept any portion of the Work.
6. Do not perform duties of Contractor.

E. Manufacturer's Field Services: Where indicated, engage a factory-authorized service representative to inspect field-assembled components and equipment installation, including service connections. Report results in writing as specified in Section 01 33 00 "Submittal Procedures."

F. Manufacturer's Technical Services: Where indicated, engage a manufacturer's technical representative to observe and inspect the Work. Manufacturer's technical representative's services include participation in preinstallation conferences, examination of substrates and conditions, verification of materials, observation of Installer activities, inspection of completed portions of the Work, and submittal of written reports.

G. Contractor's Associated Requirements and Services: Cooperate with agencies and representatives performing required tests, inspections, and similar quality-control services, and provide reasonable auxiliary services as requested. Notify agency sufficiently in advance of operations to permit assignment of personnel. Provide the following:

1. Access to the Work.
2. Incidental labor and facilities necessary to facilitate tests and inspections.
3. Adequate quantities of representative samples of materials that require testing and inspection. Assist agency in obtaining samples.
4. Facilities for storage and field curing of test samples.
5. Preliminary design mix proposed for use for material mixes that require control by testing agency.
6. Security and protection for samples and for testing and inspection equipment at Project site.

H. Coordination: Coordinate sequence of activities to accommodate required quality-assurance and quality-control services with a minimum of delay and to avoid necessity of removing and replacing construction to accommodate testing and inspection.

1. Schedule times for tests, inspections, obtaining samples, and similar activities.

PART 2 - PRODUCTS (Not Used)

PART 3 - EXECUTION

3.1 TEST AND INSPECTION LOG

A. Test and Inspection Log: Prepare a record of tests and inspections. Include the following:

1. Date test or inspection was conducted.
2. Description of the Work tested or inspected.
3. Date test or inspection results were transmitted to Architect.
4. Identification of testing agency or special inspector conducting test or inspection.

B. Maintain log at Project site. Post changes and revisions as they occur. Provide access to test and inspection log for Architect's reference during normal working hours.

1. Submit log at Project closeout as part of Project Record Documents.

3.2 REPAIR AND PROTECTION

A. General: On completion of testing, inspection, sample-taking, and similar services, repair damaged construction and restore substrates and finishes.

1. Provide materials and comply with installation requirements specified in other Specification Sections or matching existing substrates and finishes. Restore patched areas and extend restoration into adjoining areas with durable seams that are as invisible as possible. Comply with the Contract Document requirements for cutting and patching in Section 01 73 00 "Execution."

B. Protect construction exposed by or for quality-control service activities.

C. Repair and protection are Contractor's responsibility, regardless of the assignment of responsibility for quality-control services.

END OF SECTION **01 40 00**

This page intentionally left blank.

SECTION 014200 - REFERENCES

PART 1 - GENERAL

1.1 DEFINITIONS

A. General: Basic Contract definitions are included in the Conditions of the Contract.

B. "Approved": When used to convey Architect's action on Contractor's submittals, applications, and requests, "approved" is limited to Architect's duties and responsibilities as stated in the Conditions of the Contract.

C. "Directed": A command or instruction by Architect. Other terms including "requested," "authorized," "selected," "required," and "permitted" have the same meaning as "directed."

D. "Indicated": Requirements expressed by graphic representations or in written form on Drawings, in Specifications, and in other Contract Documents. Other terms including "shown," "noted," "scheduled," and "specified" have the same meaning as "indicated."

E. "Regulations": Laws, ordinances, statutes, and lawful orders issued by authorities having jurisdiction, and rules, conventions, and agreements within the construction industry that control performance of the Work.

F. "Furnish": Supply and deliver to Project site, ready for unloading, unpacking, assembly, installation, and similar operations.

G. "Install": Unload, temporarily store, unpack, assemble, erect, place, anchor, apply, work to dimension, finish, cure, protect, clean, and similar operations at Project site.

H. "Provide": Furnish and install, complete and ready for the intended use.

I. "Project Site": Space available for performing construction activities. The extent of Project site is shown on Drawings and may or may not be identical with the description of the land on which Project is to be built.

1.2 INDUSTRY STANDARDS

A. Applicability of Standards: Unless the Contract Documents include more stringent requirements, applicable construction industry standards have the same force and effect as if bound or copied directly into the Contract Documents to the extent referenced. Such standards are made a part of the Contract Documents by reference.

B. Publication Dates: Comply with standards in effect as of date of the Contract Documents unless otherwise indicated.

1. For standards referenced by applicable building codes, comply with dates of standards as listed in building codes.

C. Copies of Standards: Each entity engaged in construction on Project should be familiar with industry standards applicable to its construction activity. Copies of applicable standards are not bound with the Contract Documents.

1. Where copies of standards are needed to perform a required construction activity, obtain copies directly from publication source.

1.3 ABBREVIATIONS AND ACRONYMS

A. Industry Organizations: Where abbreviations and acronyms are used in Specifications or other Contract Documents, they shall mean the recognized name of the entities indicated in Gale's "Encyclopedia of Associations: National Organizations of the U.S." or in Columbia Books' "National Trade & Professional Associations of the United States."

B. Code Agencies: Where abbreviations and acronyms are used in Specifications or other Contract Documents, they shall mean the recognized name of the entities in the following list. This information is believed to be accurate as of the date of the Contract Documents.

1. DIN - Deutsches Institut fur Normung e.V.; www.din.de.
2. IAPMO - International Association of Plumbing and Mechanical Officials; www.iapmo.org.
3. ICC - International Code Council; www.iccsafe.org.
4. ICC-ES - ICC Evaluation Service, LLC; www.icc-es.org.

C. Federal Government Agencies: Where abbreviations and acronyms are used in Specifications or other Contract Documents, they shall mean the recognized name of the entities in the following list. Information is subject to change and is up to date as of the date of the Contract Documents.

1. COE - Army Corps of Engineers; www.usace.army.mil.
2. CPSC - Consumer Product Safety Commission; www.cpsc.gov.
3. DOC - Department of Commerce; National Institute of Standards and Technology; www.nist.gov.
4. DOD - Department of Defense; www.quicksearch.dla.mil.
5. DOE - Department of Energy; www.energy.gov.
6. EPA - Environmental Protection Agency; www.epa.gov.
7. FAA - Federal Aviation Administration; www.faa.gov.
8. FG - Federal Government Publications; www.gpo.gov/fdsys.
9. GSA - General Services Administration; www.gsa.gov.
10. HUD - Department of Housing and Urban Development; www.hud.gov.
11. LBL - Lawrence Berkeley National Laboratory; Environmental Energy Technologies Division; www.eetd.lbl.gov.
12. OSHA - Occupational Safety & Health Administration; www.osha.gov.
13. SD - Department of State; www.state.gov.
14. TRB - Transportation Research Board; National Cooperative Highway Research Program; The National Academies; www.trb.org.
15. USDA - Department of Agriculture; Agriculture Research Service; U.S. Salinity Laboratory; www.ars.usda.gov.
16. USDA - Department of Agriculture; Rural Utilities Service; www.usda.gov.
17. USDOJ - Department of Justice; Office of Justice Programs; National Institute of Justice; www.ojp.usdoj.gov.
18. USP - U.S. Pharmacopeial Convention; www.usp.org.
19. USPS - United States Postal Service; www.usps.com.

D. Standards and Regulations: Where abbreviations and acronyms are used in Specifications or other Contract Documents, they shall mean the recognized name of the standards and regulations in the following list. This information is subject to change and is believed to be accurate as of the date of the Contract Documents.

1. CFR - Code of Federal Regulations; Available from Government Printing Office; www.govinfo.gov.
2. DOD - Department of Defense; Military Specifications and Standards; Available from DLA Document Services; www.quicksearch.dla.mil.
3. DSCC - Defense Supply Center Columbus; (See FS).
4. FED-STD - Federal Standard; (See FS).
5. FS - Federal Specification; Available from DLA Document Services; www.quicksearch.dla.mil.

    a. Available from Defense Standardization Program; www.dsp.dla.mil.
    b. Available from General Services Administration; www.gsa.gov.
    c. Available from National Institute of Building Sciences/Whole Building Design Guide; www.wbdg.org.

6. MILSPEC - Military Specification and Standards; (See DOD).
7. USAB - United States Access Board; www.access-board.gov.
8. USATBCB - U.S. Architectural & Transportation Barriers Compliance Board; (See USAB).

E. State Government Agencies: Where abbreviations and acronyms are used in Specifications or other Contract Documents, they shall mean the recognized name of the entities in the following list. This information is subject to change and is believed to be accurate as of the date of the Contract Documents.

1. CBHF; State of California; Department of Consumer Affairs; Bureau of Electronic and Appliance Repair, Home Furnishings and Thermal Insulation; www.bearhfti.ca.gov.
2. CCR; California Code of Regulations; Office of Administrative Law; California Title 24 Energy Code; www.calregs.com.
3. CDHS; California Department of Health Services; (See CDPH).
4. CDPH; California Department of Public Health; Indoor Air Quality Program; www.cal-iaq.org.
5. CPUC; California Public Utilities Commission; www.cpuc.ca.gov.
6. SCAQMD; South Coast Air Quality Management District; www.aqmd.gov.
7. TFS; Texas A&M Forest Service; Sustainable Forestry and Economic Development; www.txforestservice.tamu.edu.

PART 2 - PRODUCTS (Not Used)

PART 3 - EXECUTION (Not Used)

END OF SECTION **014200**

THIS SHEET INTENTIONALLY BLANK

SECTION 014339 - MOCKUPS

PART 1 - GENERAL

1.1 SUMMARY

A. Section Includes:

1. Integrated exterior mockups.

1.2 DEFINITIONS

A. Integrated Exterior Mockups: Mockups of the exterior envelope constructed on-site as freestanding temporary built elements or part of permanent construction, consisting of multiple products, assemblies, and subassemblies.

1.3 PREINSTALLATION MEETINGS

A. Preinstallation Conference: Conduct conference at Project site.

1. Meet with Owner, Architect, testing and inspecting agency representative, and installers of major systems whose Work is included in integrated exterior mockups.
2. Review locations and extent of mockups.
3. Review testing procedures to be performed on mockups.
4. Review and finalize schedule for mockups, and verify availability of materials, personnel, equipment, and facilities needed to complete mockups and testing and maintain schedule for the Work.

1.4 ACTION SUBMITTALS

A. Shop Drawings: For integrated exterior mockups.

1.5 INFORMATIONAL SUBMITTALS

A. Preconstruction Test Reports: For integrated exterior mockups.

1.6 QUALITY ASSURANCE

A. Testing Agency Qualifications: Qualified in accordance with ASTM E699 for testing indicated and accredited by IAS or ILAC Mutual Recognition Arrangement as complying with ISO/IEC 17025 and acceptable to Owner and Architect.

B. Build mockups to do the following:

1. Verify selections made under Sample submittals.
2. Demonstrate aesthetic effects.
3. Demonstrate the qualities of products and workmanship.

4. Demonstrate acceptable coordination between components and systems.
5. Perform preconstruction testing, such as air- and water-leakage testing.

C. Fabrication: Before fabricating or installing portions of the Work requiring mockups, build mockups for each form of construction and finish required. Use materials and installation methods as required for the Work.

1. Build mockups of size indicated.
2. Build mockups in location indicated or, if not indicated, as directed by Architect.
3. Employ supervisory personnel who will oversee mockup construction. Employ workers who will be employed to perform same tasks during the construction at Project.
4. Demonstrate the proposed range of aesthetic effects and workmanship.
5. Maintain mockups during construction in an undisturbed condition as a standard for judging the completed Work.
6. Demolish and remove mockups when directed unless otherwise indicated.

D. Notifications:

1. Notify Architect seven days in advance of the dates and times when mockups will be constructed.
2. Notify Architect fourteen days in advance of the dates and times when mockups will be tested.
3. Allow seven days for initial review and each re-review of each mockup.

E. Approval: Obtain Architect's approval of mockups before starting fabrication or construction of corresponding Work.

1. Unless otherwise indicated, approved mockups establish the standard by which the Work will be judged.
2. Approval of mockups does not constitute approval of deviations from the Contract Documents contained in mockups unless Architect specifically approves such deviations in writing.
3. Subject to compliance with requirements, approved mockups may become part of the completed Work if undisturbed at time of Substantial Completion.

1.7 COORDINATION

A. Coordinate schedule for construction of mockups, so construction, testing, and review of mockups do not impact Project schedule.

PART 2 - PRODUCTS

2.1 PERFORMANCE REQUIREMENTS

A. Delegated Design: Engage a qualified professional engineer, as defined in Section 014000 "Quality Requirements," to design support structure for free-standing mockups.

B. Structural Performance:

1. Wind Loads: As indicated on Drawings.

C. Mockup Testing Performance Requirements: Perform tests using design pressures and performance criteria indicated for assemblies and products that are specified in other Sections and incorporated into [integrated exterior] mockups.

2.2 INTEGRATED EXTERIOR MOCKUPS

A. Construct integrated exterior mockups according to approved mockup Shop Drawings. Construct mockups to demonstrate constructability, coordination of trades, and sequencing of Work; and to ensure materials, components, subassemblies, assemblies, and interfaces integrate into a system complying with indicated performance and aesthetic requirements.

B. Build integrated exterior mockups using installers and construction methods that will be used in completed construction.

C. Use specified products that have been approved by Architect. Coordinate installation of materials and products specified in individual Specification Sections that include Work included in integrated exterior mockups.

D. The Work of integrated exterior mockups includes, but is not limited to, the following:

1. Precast architectural concrete.
2. Cold-formed metal framing and sheathing.
3. Air and weather barriers.
4. Thermal insulation.
5. Through-wall flashing.
6. Flashing and sheet metal trim.
7. Joint sealants.
8. Roofing and flashing.

E. Photographic Documentation: Document construction of integrated exterior mockups with photographs in accordance with Section 013233 "Photographic Documentation." Provide photographs showing details of interface of different materials and assemblies.

1. Document testing procedures, including water leakage and other deficiencies. Photograph modifications to component interfaces intended to correct deficiencies.

F. Provide and document modifications to construction details and interfaces between components and systems required to properly sequence the Work, or to pass performance testing requirements. Obtain Architect's approval for modifications.

G. Retain approved mockups constructed in place. Incorporate fully into the Work.

PART 3 - EXECUTION – NOT USED

END OF SECTION **014339**

THIS PAGE INTENTIONALLY LEFT BLANK

SECTION 015000 - TEMPORARY FACILITIES AND CONTROLS

PART 1 - GENERAL

1.1 SUMMARY

A. Section includes requirements for temporary utilities, support facilities, and security and protection facilities.

B. Related Requirements:

1. Section 011000 "Summary" for work restrictions and limitations on utility interruptions.

1.2 USE CHARGES

A. Installation, removal, and use charges for temporary facilities shall be included in the Contract Sum unless otherwise indicated. Allow other entities engaged in the Project to use temporary services and facilities without cost, including, but not limited to Architect, occupants of Project, testing agencies, and authorities having jurisdiction.

B. Water and Sewer Service from Existing System: Water from Owner's existing water system is available for use [with metering] [without metering and without payment of use charges]. Provide connections and extensions of services [and metering] as required for construction operations.

C. Electric Power Service from Existing System: Electric power from Owner's existing system is available for use [with metering] [without metering and without payment of use charges]. Provide connections and extensions of services [and metering] as required for construction operations.

1.3 INFORMATIONAL SUBMITTALS

A. Site Utilization Plan: Show temporary facilities, temporary utility lines and connections, staging areas, construction site entrances, vehicle circulation, and parking areas for construction personnel.

B. Project Identification and Temporary Signs: Show fabrication and installation details, including plans, elevations, details, layouts, typestyles, graphic elements, and message content.

C. Fire-Safety Program: Show compliance with requirements of NFPA 241 and authorities having jurisdiction. Indicate Contractor personnel responsible for management of fire-prevention program.

D. Moisture- and Mold-Protection Plan: Describe procedures and controls for protecting materials and construction from water absorption and damage and mold. Describe delivery, handling, storage, installation, and protection provisions for materials subject to water absorption or water damage.

1. Indicate procedures for discarding water-damaged materials, protocols for mitigating water intrusion into completed Work, and requirements for replacing water-damaged Work.
2. Indicate sequencing of work that requires water, such as sprayed fire-resistive materials, plastering, and terrazzo grinding, and describe plans for dealing with water from these operations. Show procedures for verifying that wet construction has dried sufficiently to permit installation of finish materials.
3. Indicate methods to be used to avoid trapping water in finished work.

1.4 QUALITY ASSURANCE

A. Electric Service: Comply with NECA, NEMA, and UL standards and regulations for temporary electric service. Install service to comply with NFPA 70.

B. Tests and Inspections: Arrange for authorities having jurisdiction to test and inspect each temporary utility before use. Obtain required certifications and permits.

C. Accessible Temporary Egress: Comply with applicable provisions in [the United States Access Board's ADA-ABA Accessibility Guidelines] [and] [ICC/ANSI A117.1].

1.5 PROJECT CONDITIONS

A. Temporary Use of Permanent Facilities: Engage Installer of each permanent service to assume responsibility for operation, maintenance, and protection of each permanent service during its use as a construction facility before Owner's acceptance, regardless of previously assigned responsibilities.

PART 2 - PRODUCTS

2.1 TEMPORARY FACILITIES

A. Field Offices: Coordinate with Owner if an interior location is available for a minimal field office.

B. Materials: Provide new materials. Undamaged, previously used materials in serviceable condition may be used if approved by Architect. Provide materials suitable for use intended:

1. Chain-Link Fencing: Minimum 2-inch (50-mm), 0.148-inch- (3.8-mm-) thick, galvanized steel, chain-link fabric fencing; minimum 6 feet (1.8 m) high with galvanized steel pipe posts; minimum 2-3/8-inch- (60-mm-) OD line posts and 2-7/8-inch- (73-mm-) OD corner and pull posts, with 1- 5/8-inch- (42-mm-) OD top rails.
2. Portable Chain-Link Fencing: Minimum 2-inch (50-mm), 0.148-inch- (3.8-mm-) thick, galvanized steel, chain-link fabric fencing; minimum 6 feet (1.8 m) high with galvanized steel pipe posts; minimum 2-3/8-inch- (60-mm-) OD line posts and 2-7/8-inch- (73-mm-) OD corner and pull posts, with 1-5/8-inch- (42-mm-) OD top and bottom rails. Provide concrete or galvanized steel bases for supporting posts.
3. Tarpaulins: Fire-resistive labeled with flame-spread rating of 15 or less.
4. Polyethylene Sheet: Reinforced, fire-resistive sheet, 10-mil (0.25-mm) minimum thickness, with flame-spread rating of 15 or less per ASTM E 84 and passing NFPA 701 Test Method 2.
5. Dust Control Adhesive-Surface Walk-off Mats: Provide mats minimum 36 by 60 inches.

2.2 EQUIPMENT

A. Fire Extinguishers: Portable, UL rated; with class and extinguishing agent as required by locations and classes of fire exposures.

PART 3 - EXECUTION

3.1 TEMPORARY FACILITIES, GENERAL

A. Conservation: Coordinate construction and use of temporary facilities with consideration given to conservation of energy, water, and materials. Coordinate use of temporary utilities to minimize waste.

1. Salvage materials and equipment involved in performance of, but not actually incorporated into, the Work. See other Sections for disposition of salvaged materials that are designated as Owner's property.

3.2 INSTALLATION, GENERAL

A. Locate facilities where they will serve Project adequately and result in minimum interference with performance of the Work. Relocate and modify facilities as required by progress of the Work.

B. Provide each facility ready for use when needed to avoid delay. Do not remove until facilities are no longer needed or are replaced by authorized use of completed permanent facilities.

3.3 TEMPORARY UTILITY INSTALLATION

A. General: Install temporary service or connect to existing service.

1. Arrange with utility company, Owner, and existing users for time when service can be interrupted, if necessary, to make connections for temporary services.

B. Sewers and Drainage: Provide temporary utilities to remove effluent lawfully.

C. Sanitary Facilities: Provide temporary toilets, wash facilities, safety shower and eyewash facilities, and drinking water for use of construction personnel. Comply with requirements of authorities having jurisdiction for type, number, location, operation, and maintenance of fixtures and facilities.

D. Isolation of Work Areas in Occupied Facilities: Prevent dust, fumes, and odors from entering occupied areas.

E. Electric Power Service: Provide electric power service and distribution system of sufficient size, capacity, and power characteristics required for construction operations.

F. Lighting: Provide temporary lighting with local switching that provides adequate illumination for construction operations, observations, inspections, and traffic conditions.

1. Install and operate temporary lighting that fulfills security and protection requirements without operating entire system.

G. Telephone Service: Provide cellular telephones for use by GC's Project Manager.

3.4 SUPPORT FACILITIES INSTALLATION

A. Comply with the following:

1. Provide construction for temporary field offices, shops, and sheds located within construction area or within 30 feet of building lines that is noncombustible according to ASTM E136. Comply with NFPA 241.
2. Utilize designated area within existing building for temporary field offices.
3. Maintain support facilities until Architect schedules Substantial Completion inspection. Remove before Substantial Completion. Personnel remaining after Substantial Completion will be permitted to use permanent facilities, under conditions acceptable to Owner.

B. Traffic Controls: Comply with requirements of authorities having jurisdiction.

1. Protect existing site improvements to remain including curbs, pavement, and utilities.
2. Maintain access for fire-fighting equipment and access to fire hydrants.

C. Parking: Use designated areas of Owner's existing parking areas for construction personnel.

D. Storage and Staging: Use designated areas of Project site for storage and staging needs.

E. Dewatering Facilities and Drains: Comply with requirements of authorities having jurisdiction. Maintain Project site, excavations, and construction free of water.

1. Dispose of rainwater in a lawful manner that will not result in flooding Project or adjoining properties or endanger permanent Work or temporary facilities.
2. Remove snow and ice as required to minimize accumulations.

F. Project Signs: Provide Project signs as indicated. Unauthorized signs are not permitted.

1. Temporary Signs: Provide signs as required to inform public and individuals seeking entrance to Project.

   a. Provide temporary, directional signs for construction personnel and visitors.

2. Maintain and touch up signs so they are legible at all times.

G. Waste Disposal Facilities: Comply with requirements specified in Section 017419 "Construction Waste Management and Disposal."

H. Waste Disposal Facilities: Provide waste-collection containers in sizes adequate to handle waste from construction operations. Comply with requirements of authorities having jurisdiction. Comply with progress cleaning requirements in Section 017300 "Execution."

I. Lifts and Hoists: Provide facilities necessary for hoisting materials and personnel.

1. Truck cranes and similar devices used for hoisting materials are considered "tools and equipment" and not temporary facilities.

J. Temporary Elevator Use: Use of building elevators is not permitted.

K. Existing Stair Usage: Limited use of one of Owner's existing stairs will be permitted, provided stairs are cleaned and maintained in a condition acceptable to Owner. At Substantial Completion, restore stairs to condition existing before initial use. Egress use of all of Owner's facilities is permitted in emergencies.

1. Provide protective coverings, barriers, devices, signs, or other procedures to protect stairs and to maintain means of egress. If stairs become damaged, restore damaged areas so no evidence remains of correction work.

3.5 SECURITY AND PROTECTION FACILITIES INSTALLATION

A. Protection of Existing Facilities: Protect existing vegetation, equipment, structures, utilities, and other improvements at Project site and on adjacent properties, except those indicated to be removed or altered. Repair damage to existing facilities.

1. Where access to adjacent properties is required in order to affect protection of existing facilities, obtain written permission from adjacent property owner to access property for that purpose.

B. Environmental Protection: Provide protection, operate temporary facilities, and conduct construction as required to comply with environmental regulations and that minimize possible air, waterway, and subsoil contamination or pollution or other undesirable effects.

C. Stormwater Control: Comply with requirements of authorities having jurisdiction. Provide barriers in and around excavations and subgrade construction to prevent flooding by runoff of stormwater from heavy rains.

D. Tree and Plant Protection: Install temporary fencing located as indicated or outside the drip line of trees to protect vegetation from damage from construction operations. Protect tree root systems from damage, flooding, and erosion.

E. Site Enclosure Fence: Before construction operations begin, furnish and install site enclosure fence in a manner that will prevent people from easily entering site except by entrance gates.

1. Extent of Fence: As required to enclose entire Project site or portion determined sufficient to accommodate construction operations.
2. Maintain security by limiting number of keys and restricting distribution to authorized personnel. Furnish one set of keys to Owner.

F. Security Enclosure and Lockup: Coordinate with Owner to maintain existing levels of security for the roof area.

G. Barricades, Warning Signs, and Lights: Comply with requirements of authorities having jurisdiction for erecting structurally adequate barricades, including warning signs and lighting.

H. Temporary Enclosures: Provide temporary enclosures for protection of construction, in progress and completed, from exposure, foul weather, other construction operations, and similar activities. Provide temporary weathertight enclosure for building exterior.

I. Temporary Partitions: Provide floor-to-ceiling dustproof partitions to limit dust and dirt migration and to separate areas occupied by Owner from fumes and noise.

1. Construct dustproof partitions with gypsum wallboard with joints taped on occupied side, and fire-retardant-treated plywood on construction operations side.

2. Where fire-resistance-rated temporary partitions are indicated or are required by authorities having jurisdiction, construct partitions according to the rated assemblies.
3. Provide walk-off mats at each entrance through temporary partition.

J. Temporary Fire Protection: Install and maintain temporary fire-protection facilities of types needed to protect against reasonably predictable and controllable fire losses. Comply with NFPA 241; manage fire-prevention program.

1. Prohibit smoking in construction areas. Comply with additional limits on smoking specified in other Sections.
2. Supervise welding operations, combustion-type temporary heating units, and similar sources of fire ignition according to requirements of authorities having jurisdiction.
3. Develop and supervise an overall fire-prevention and -protection program for personnel at Project site. Review needs with local fire department and establish procedures to be followed. Instruct personnel in methods and procedures. Post warnings and information.
4. Provide temporary standpipes and hoses for fire protection. Hang hoses with a warning sign stating that hoses are for fire-protection purposes only and are not to be removed. Match hose size with outlet size and equip with suitable nozzles.

3.6 MOISTURE AND MOLD CONTROL

A. Moisture and Mold Protection: Protect stored materials and installed Work in accordance with Moisture and Mold Protection Plan.

B. Exposed Construction Period: Before installation of weather barriers, when materials are subject to wetting and exposure and to airborne mold spores, protect as follows:

1. Protect porous materials from water damage.
2. Protect stored and installed material from flowing or standing water.
3. Keep porous and organic materials from coming into prolonged contact with concrete.
4. Remove standing water from decks.
5. Keep deck openings covered or dammed.

C. Partially Enclosed Construction Period: After installation of weather barriers but before full enclosure and conditioning of building, when installed materials are still subject to infiltration of moisture and ambient mold spores, protect as follows:

1. Do not load or install drywall or other porous materials or components, or items with high organic content, into partially enclosed building.
2. Keep interior spaces reasonably clean and protected from water damage.
3. Periodically collect and remove waste containing cellulose or other organic matter.
4. Discard or replace water-damaged material.
5. Do not install material that is wet.
6. Discard and replace stored or installed material that begins to grow mold.
7. Perform work in a sequence that allows wet materials adequate time to dry before enclosing the material in gypsum board or other interior finishes.

D. Controlled Construction Period: After completing and sealing of the building enclosure but prior to the full operation of permanent HVAC systems, maintain as follows:

1. Control moisture and humidity inside building by maintaining effective dry-in conditions.
2. Use temporary or permanent HVAC system to control humidity within ranges specified for installed and stored materials.

3. Comply with manufacturer's written instructions for temperature, relative humidity, and exposure to water limits.

3.7 OPERATION, TERMINATION, AND REMOVAL

A. Supervision: Enforce strict discipline in use of temporary facilities. To minimize waste and abuse, limit availability of temporary facilities to essential and intended uses.

B. Maintenance: Maintain facilities in good operating condition until removal.

1. Maintain operation of temporary enclosures, heating, cooling, humidity control, ventilation, and similar facilities on a 24-hour basis where required to achieve indicated results and to avoid possibility of damage.

C. Termination and Removal: Remove each temporary facility when need for its service has ended, when it has been replaced by authorized use of a permanent facility, or no later than Substantial Completion. Complete or, if necessary, restore permanent construction that may have been delayed because of interference with temporary facility. Repair damaged Work, clean exposed surfaces, and replace construction that cannot be satisfactorily repaired.

1. Materials and facilities that constitute temporary facilities are property of Contractor. Owner reserves right to take possession of Project identification signs.
2. At Substantial Completion, repair, renovate, and clean permanent facilities used during construction period. Comply with final cleaning requirements specified in Section 017700 "Closeout Procedures."

END OF SECTION **015000**

THIS SHEET INTENTIONALLY LEFT BLANK

SECTION 016000 - PRODUCT REQUIREMENTS

PART 1 - GENERAL

1.1 SUMMARY

A. Section includes administrative and procedural requirements for selection of products for use in Project; product delivery, storage, and handling; manufacturers' standard warranties on products; special warranties; and comparable products.

1.2 DEFINITIONS

A. Products: Items obtained for incorporating into the Work, whether purchased for Project or taken from previously purchased stock. The term "product" includes the terms "material," "equipment," "system," and terms of similar intent.

1. Named Products: Items identified by manufacturer's product name, including make or model number or other designation shown or listed in manufacturer's published product literature that is current as of date of the Contract Documents.
2. New Products: Items that have not previously been incorporated into another project or facility. Salvaged items or items reused from other projects are not considered new products. Items that are manufactured or fabricated to include recycled content materials are considered new products, unless indicated otherwise.
3. Comparable Product: Product by named manufacturer that is demonstrated and approved through the comparable product submittal process described in Part 2 "Comparable Products" Article, to have the indicated qualities related to type, function, dimension, in-service performance, physical properties, appearance, and other characteristics that equal or exceed those of specified product.

B. Basis-of-Design Product Specification: A specification in which a single manufacturer's product is named and accompanied by the words "basis-of-design product," including make or model number or other designation. Published attributes and characteristics of basis-of-design product establish salient characteristics of products.

1. Evaluation of Comparable Products: In addition to the basis-of-design product description, product attributes and characteristics may be listed to establish the significant qualities related to type, function, in-service performance and physical properties, weight, dimension, durability, visual characteristics, and other special features and requirements for purposes of evaluating comparable products of additional manufacturers named in the specification. [Manufacturer's published attributes and characteristics of basis-of-design product also establish salient characteristics of products for purposes of evaluating comparable products.]

C. Subject to Compliance with Requirements: Where the phrase "Subject to compliance with requirements" introduces a product selection procedure in an individual Specification Section, provide products qualified under the specified product procedure. In the event that a named product or product by a named manufacturer does not meet the other requirements of the specifications, select another named product or product from another named manufacturer that does meet the requirements of the specifications; submit a comparable product request or substitution request, if applicable.

D. Comparable Product Request Submittal: An action submittal requesting consideration of a comparable product, including the following information:

1. Identification of basis-of-design product or fabrication or installation method to be replaced, including Specification Section number and title and Drawing numbers and titles.
2. Data indicating compliance with the requirements specified in Part 2 "Comparable Products" Article.

E. Basis-of-Design Product Specification Submittal: An action submittal complying with requirements in Section 013300 "Submittal Procedures."

1.3 QUALITY ASSURANCE

A. Compatibility of Options: If Contractor is given option of selecting between two or more products for use on Project, select product compatible with products previously selected, even if previously selected products were also options.

1.4 PRODUCT DELIVERY, STORAGE, AND HANDLING

A. Deliver, store, and handle products, using means and methods that will prevent damage, deterioration, and loss, including theft and vandalism. Comply with manufacturer's written instructions.

1.5 PRODUCT WARRANTIES

A. Warranties specified in other Sections shall be in addition to, and run concurrent with, other warranties required by the Contract Documents. Manufacturer's disclaimers and limitations on product warranties do not relieve Contractor of obligations under requirements of the Contract Documents.

1. Manufacturer's Warranty: Written standard warranty form furnished by individual manufacturer for a particular product and issued in the name of the Owner or endorsed by manufacturer to Owner.
2. Special Warranty: Written warranty required by the Contract Documents to provide specific rights for Owner and issued in the name of the Owner or endorsed by manufacturer to Owner.

B. Special Warranties: Prepare a written document that contains appropriate terms and identification, ready for execution.

1. Manufacturer's Standard Form: Modified to include Project-specific information and properly executed.
2. Specified Form: When specified forms are included in the Project Manual, prepare a written document, using indicated form properly executed.
3. See other Sections for specific content requirements and particular requirements for submitting special warranties.

PART 2 - PRODUCTS

2.1 PRODUCT SELECTION PROCEDURES

A. General Product Requirements: Provide products that comply with the Contract Documents, are undamaged and, unless otherwise indicated, are new at time of installation.

1. Provide products complete with accessories, trim, finish, fasteners, and other items needed for a complete installation and indicated use and effect.
2. Standard Products: If available, and unless custom products or nonstandard options are specified, provide standard products of types that have been produced and used successfully in similar situations on other projects.
3. Owner reserves the right to limit selection to products with warranties meeting requirements of the Contract Documents.
4. Where products are accompanied by the term "as selected," Architect will make selection.
5. Descriptive, performance, and reference standard requirements in the Specifications establish salient characteristics of products.

B. Product Selection Procedures:

1. Limited List of Products: Where Specifications include a list of names of both manufacturers and products, provide one of the products listed that complies with requirements. Comparable products or substitutions for Contractor's convenience will will not be considered unless otherwise indicated.

   a. Limited list of products may be indicated by the phrase "Subject to compliance with requirements, provide one of the following."

2. Non-Limited List of Products: Where Specifications include a list of names of both available manufacturers and products, provide one of the products listed or an unnamed product that complies with requirements.

   a. Non-limited list of products is indicated by the phrase "Subject to compliance with requirements, available products that may be incorporated in the Work include, but are not limited to, the following."
   b. Provision of an unnamed product is not considered a substitution, if the product complies with requirements.

3. Limited List of Manufacturers: Where Specifications include a list of manufacturers' names, provide a product by one of the manufacturers listed that complies with requirements. Comparable products or substitutions for Contractor's convenience will not be considered unless otherwise indicated.

   a. Limited list of manufacturers is indicated by the phrase "Subject to compliance with requirements, provide products by one of the following."

4. Non-Limited List of Manufacturers: Where Specifications include a list of available manufacturers, provide a product by one of the manufacturers listed or a product by an unnamed manufacturer that complies with requirements.

   a. Non-limited list of manufacturers is indicated by the phrase "Subject to compliance with requirements, available manufacturers whose products may be incorporated in the Work include, but are not limited to, the following."

b. Provision of products of an unnamed manufacturer is not considered a substitution, if the product complies with requirements.

5. Basis-of-Design Product: Where Specifications name a product, or refer to a product indicated on Drawings, and include a list of manufacturers, provide the specified or indicated product or a comparable product by one of the other named manufacturers. Drawings and Specifications may additionally indicate sizes, profiles, dimensions, and other characteristics that are based on the product named. Comply with requirements in "Comparable Products" Article for consideration of an unnamed product by one of the other named manufacturers.

C. Visual Matching Specification: Where Specifications require the phrase "match Architect's sample," provide a product that complies with requirements and matches Architect's sample. Architect's decision will be final on whether a proposed product matches.

1. If no product available within specified category matches and complies with other specified requirements, comply with requirements in Section 012500 "Substitution Procedures" for proposal of product.

D. Visual Selection Specification: Where Specifications include the phrase "as selected by Architect from manufacturer's full range" or a similar phrase, select a product that complies with requirements. Architect will select color, gloss, pattern, density, or texture from manufacturer's product line that includes both standard and premium items.

E. Sustainable Product Selection: Where Specifications require product to meet sustainable product characteristics, select products complying with indicated requirements. Comply with requirements in Division 01 sustainability requirements Section and individual Specification Sections.

1. Select products for which sustainable design documentation submittals are available from manufacturer.

2.2 COMPARABLE PRODUCTS

A. Conditions for Consideration of Comparable Products: Architect will consider Contractor's request for comparable product when the following conditions are satisfied. If the following conditions are not satisfied, Architect may return requests without action, except to record noncompliance with the following requirements:

1. Evidence that proposed product does not require revisions to the Contract Documents, is consistent with the Contract Documents, will produce the indicated results, and is compatible with other portions of the Work.
2. Detailed comparison of significant qualities of proposed product with those of the named basis-of-design product. Significant product qualities include attributes, such as type, function, in-service performance and physical properties, weight, dimension, durability, visual characteristics, and other specific features and requirements.
3. Evidence that proposed product provides specified warranty.
4. List of similar installations for completed projects, with project names and addresses and names and addresses of architects and owners, if requested.
5. Samples, if requested.

B. Architect's Action on Comparable Products Submittal: If necessary, Architect will request additional information or documentation for evaluation, as specified in Section 013300 "Submittal Procedures."

1. Form of Approval of Submittal: As specified in Section 013300 "Submittal Procedures."
2. Use product specified if Architect does not issue a decision on use of a comparable product request within time allocated.

C. Submittal Requirements, Two-Step Process: Approval by the Architect of Contractor's request for use of comparable product is not intended to satisfy other submittal requirements. Comply with specified submittal requirements.

D. Submittal Requirements, Single-Step Process: When acceptable to Architect, incorporate specified submittal requirements of individual Specification Section in combined submittal for comparable products. Approval by the Architect of Contractor's request for use of comparable product and of individual submittal requirements will also satisfy other submittal requirements.

PART 3 - EXECUTION (Not Used)

END OF SECTION **016000**

THIS SHEET INTENTIONALLY LEFT BLANK

SECTION 017300 - EXECUTION

PART 1 - GENERAL

1.1 SUMMARY

A. Section includes general administrative and procedural requirements governing execution of the Work, including, but not limited to, the following:

1. Construction layout.
2. Field engineering and surveying.
3. Installation of the Work.
4. Cutting and patching.
5. Coordination of Owner's portion of the Work.
6. Coordination of Owner-installed products.
7. Progress cleaning.
8. Starting and adjusting.
9. Protection of installed construction.
10. Correction of the Work.

B. Related Requirements:

1. Section 011000 "Summary" for coordination of and limits on use of Project site.
2. Section 017700 "Closeout Procedures" for submitting final property survey with Project Record Documents, recording of Owner-accepted deviations from indicated lines and levels, replacing defective work, and final cleaning.
3. Section 024119 "Selective Demolition" for demolition and removal of selected portions of the building.

1.2 DEFINITIONS

A. Cutting: Removal of in-place construction necessary to permit installation or performance of subsequent work.

B. Patching: Fitting and repair work required to restore construction to original conditions after installation of subsequent work.

1.3 INFORMATIONAL SUBMITTALS

A. None required.

1.4 CLOSEOUT SUBMITTALS

A. All warranty documents shall be submitted as informational submittals

1.5 QUALITY ASSURANCE

A. Cutting and Patching: Comply with requirements for and limitations on cutting and patching of construction elements.

1. Structural Elements: When cutting and patching structural elements, or when encountering the need for cutting and patching of elements whose structural function is not known, notify Architect of locations and details of cutting and await directions from Architect before proceeding. Shore, brace, and support structural elements during cutting and patching. Do not cut and patch structural elements in a manner that could change their load-carrying capacity or increase deflection.
2. Operational Elements: Do not cut and patch operating elements and related components in a manner that results in reducing their capacity to perform as intended or that results in increased maintenance or decreased operational life or safety.

3. Other Construction Elements: Do not cut and patch other construction elements or components in a manner that could change their load-carrying capacity, that results in reducing their capacity to perform as intended, or that results in increased maintenance or decreased operational life or safety.

4. Visual Elements: Do not cut and patch construction in a manner that results in visual evidence of cutting and patching. Do not cut and patch exposed construction in a manner that would, in Architect's opinion, reduce the building's aesthetic qualities. Remove and replace construction that has been cut and patched in a visually unsatisfactory manner.

B. Manufacturer's Installation Instructions: Obtain and maintain on-site manufacturer's written recommendations and instructions for installation of specified products and equipment.

PART 2 - PRODUCTS

2.1 MATERIALS

A. Comply with requirements specified in other Sections.

1. For projects requiring compliance with sustainable design and construction practices and procedures, use products for patching that comply with sustainable design requirements.

B. In-Place Materials: Use materials for patching identical to in-place materials. For exposed surfaces, use materials that visually match in-place adjacent surfaces to the fullest extent possible.

1. If identical materials are unavailable or cannot be used, use materials that, when installed, will provide a match acceptable to Architect for the visual and functional performance of in-place materials. Use materials that are not considered hazardous.

C. Cleaning Agents: Use cleaning materials and agents recommended by manufacturer or fabricator of the surface to be cleaned. Do not use cleaning agents that are potentially hazardous to health or property or that might damage finished surfaces.

PART 3 - EXECUTION

3.1 EXAMINATION

A. Existing Conditions: The existence and location of underground and other utilities and construction indicated as existing are not guaranteed. Before beginning sitework, investigate and verify the existence and location of underground utilities,[mechanical and electrical systems,] and other construction affecting the Work.

1. Before construction, verify the location and invert elevation at points of connection of sanitary sewer, storm sewer, gas service piping, and water-service piping; underground electrical services; and other utilities.
2. Furnish location data for work related to Project that must be performed by public utilities serving Project site.

B. Examination and Acceptance of Conditions: Before proceeding with each component of the Work, examine substrates, areas, and conditions, with Installer or Applicator present where indicated, for compliance with requirements for installation tolerances and other conditions affecting performance. Record observations.

1. Examine roughing-in for mechanical and electrical systems to verify actual locations of connections before equipment and fixture installation.
2. Examine walls, floors, and roofs for suitable conditions where products and systems are to be installed.
3. Verify compatibility with and suitability of substrates, including compatibility with existing finishes or primers.

C. Written Report: Where a written report listing conditions detrimental to performance of the Work is required by other Sections, include the following:

1. Description of the Work, including Specification Section number and paragraph, and Drawing sheet number and detail, where applicable.
2. List of detrimental conditions, including substrates.
3. List of unacceptable installation tolerances.
4. Recommended corrections.

D. Proceed with installation only after unsatisfactory conditions have been corrected. Proceeding with the Work indicates acceptance of surfaces and conditions.

3.2 PREPARATION

A. Existing Utility Information: Furnish information to Owner that is necessary to adjust, move, or relocate existing utility structures, utility poles, lines, services, equipment platforms, antenna arrays or other utility appurtenances located in or affected by construction. Coordinate with authorities having jurisdiction.

B. Field Measurements: Take field measurements as required to fit the Work properly. Recheck measurements before installing each product. Where portions of the Work are indicated to fit to other construction, verify dimensions of other construction by field measurements before fabrication. Coordinate fabrication schedule with construction progress to avoid delaying the Work.

C. Space Requirements: Verify space requirements and dimensions of items shown diagrammatically on Drawings.

D. Review of Contract Documents and Field Conditions: Immediately on discovery of the need for clarification of the Contract Documents, submit a request for information to Architect in accordance with requirements in Section 013100 "Project Management and Coordination."

3.3 CONSTRUCTION LAYOUT

A. Verification: Before proceeding to lay out the Work, verify layout information shown on Drawings, in relation to the property survey and existing benchmarks and existing conditions. If discrepancies are discovered, notify Architect promptly.

B. Engage personnel experienced in laying out the Work, using the following accepted surveying practices:
   1. Establish limits on use of Project site.
   2. Establish dimensions within tolerances indicated. Do not scale Drawings to obtain required dimensions.
   3. Inform installers of lines and levels to which they must comply.
   4. Check the location, level and plumb, of every major element as the Work progresses.
   5. Notify Architect when deviations from required lines and levels exceed allowable tolerances.

C. Building Lines and Levels: Locate and lay out control lines and levels for structures and roof and floor levels, including those required for mechanical and electrical work. Transfer survey markings and elevations for use with control lines and levels.

3.4 INSTALLATION

A. Locate the Work and components of the Work accurately, in correct alignment and elevation, as indicated.

   1. Make vertical work plumb, and make horizontal work level.
   2. Where space is limited, install components to maximize space available for maintenance and ease of removal for replacement.
   3. Conceal pipes, ducts, and wiring in finished areas unless otherwise indicated.

B. Comply with manufacturer's written instructions and recommendations for installing products in applications indicated.

C. Install products at the time and under conditions that will ensure satisfactory results as judged by Architect. Maintain conditions required for product performance until Substantial Completion.

D. Conduct construction operations, so no part of the Work is subjected to damaging operations or loading in excess of that expected during normal conditions of occupancy of type expected for Project.

E. Sequence the Work and allow adequate clearances to accommodate movement of construction items on-site and placement in permanent locations.

F. Tools and Equipment: Select tools or equipment that minimize production of excessive noise levels.

G. Templates: Obtain and distribute to the parties involved templates for Work specified to be factory prepared and field installed. Check Shop Drawings of other portions of the Work to confirm that adequate provisions are made for locating and installing products to comply with indicated requirements.

H. Attachment: Provide blocking and attachment plates and anchors and fasteners of adequate size and number to securely anchor each component in place, accurately located and aligned with other portions of the Work. Where size and type of attachments are not indicated, verify size and type required for load conditions with manufacturer.

1. Mounting Heights: Where mounting heights are not indicated, mount components at heights directed by Architect.
2. Allow for building movement, including thermal expansion and contraction.
3. Coordinate installation of anchorages. Furnish setting drawings, templates, and directions for installing anchorages, including sleeves, concrete inserts, anchor bolts, and items with integral anchors, that are to be embedded in concrete or masonry. Deliver such items to Project site in time for installation.

I. Joints: Make joints of uniform width. Where joint locations in exposed Work are not indicated, arrange joints for the best visual effect, as judged by Architect. Fit exposed connections together to form hairline joints.

3.5 CUTTING AND PATCHING

A. General: Employ skilled workers to perform cutting and patching. Proceed with cutting and patching at the earliest feasible time, and complete without delay.

1. Cut in-place construction to provide for installation of other components or performance of other construction, and subsequently patch as required to restore surfaces to their original condition.

B. Existing Warranties: Remove, replace, patch, and repair materials and surfaces cut or damaged during installation or cutting and patching operations, by methods and with materials so as not to void existing warranties.

C. Temporary Support: Provide temporary support of Work to be cut.

D. Protection: Protect in-place construction during cutting and patching to prevent damage. Provide protection from adverse weather conditions for portions of Project that might be exposed during cutting and patching operations.

E. Adjacent Occupied Areas: Where interference with use of adjoining areas or interruption of free passage to adjoining areas is unavoidable, coordinate cutting and patching in accordance with requirements in Section 011000 "Summary."

F. Existing Utility Services and Mechanical/Electrical Systems: Where existing services/systems are required to be removed, relocated, or abandoned, bypass such services/systems before cutting to [minimize] [prevent] interruption to occupied areas.

G. Cutting: Cut in-place construction by sawing, drilling, breaking, chipping, grinding, and similar operations, including excavation, using methods least likely to damage elements retained or adjoining construction. If possible, review proposed procedures with original Installer; comply with original Installer's written recommendations.

1. In general, use hand or small power tools designed for sawing and grinding, not hammering and chopping. Cut holes and slots neatly to minimum size required, and with minimum disturbance of adjacent surfaces. Temporarily cover openings when not in use.
2. Finished Surfaces: Cut or drill from the exposed or finished side into concealed surfaces.
3. Concrete: Cut using a cutting machine, such as an abrasive saw or a diamond-core drill.
4. Mechanical and Electrical Services: Cut off pipe or conduit in walls or partitions to be removed. Cap, valve, or plug and seal remaining portion of pipe or conduit to prevent entrance of moisture or other foreign matter after cutting.
5. Proceed with patching after construction operations requiring cutting are complete.

H. Patching: Patch construction by filling, repairing, refinishing, closing up, and similar operations following performance of other Work. Patch with durable seams that are as invisible as practicable, as judged by Architect. Provide materials and comply with installation requirements specified in other Sections, where applicable.

1. Inspection: Where feasible, test and inspect patched areas after completion to demonstrate physical integrity of installation.
2. Exposed Finishes: Restore exposed finishes of patched areas and extend finish restoration into retained adjoining construction in a manner that will eliminate evidence of patching and refinishing.

    a. Clean piping, conduit, and similar features before applying paint or other finishing materials.
    b. Restore damaged pipe covering to its original condition.

3. Floors and Walls: Where walls or partitions that are removed extend one finished area into another, patch and repair floor and wall surfaces in the new space. Provide an even surface of uniform finish, color, texture, and appearance. Remove in-place floor and wall coverings and replace with new materials, if necessary, to achieve uniform color and appearance.

    a. Where patching occurs in a painted surface, prepare substrate and apply primer and intermediate paint coats appropriate for substrate over the patch, and apply final paint coat over entire unbroken surface containing the patch, corner to corner of wall and edge to edge of ceiling. Provide additional coats until patch blends with adjacent surfaces.

4. Ceilings: Patch, repair, or rehang in-place ceilings as necessary to provide an even-plane surface of uniform appearance.
5. Exterior Building Enclosure: Patch components in a manner that restores enclosure to a weathertight condition and ensures thermal and moisture integrity of building enclosure.

I. Cleaning: Clean areas and spaces where cutting and patching are performed. Remove paint, mortar, oils, putty, and similar materials from adjacent finished surfaces.

3.6 PROGRESS CLEANING

A. Clean Project site and work areas daily, including common areas. Enforce requirements strictly. Dispose of materials lawfully.

1. Comply with requirements in NFPA 241 for removal of combustible waste materials and debris.
2. Do not hold waste materials more than seven days during normal weather or three days if the temperature is expected to rise above 80 deg F.

3. Containerize hazardous and unsanitary waste materials separately from other waste. Mark containers appropriately and dispose of legally, according to regulations.

    a. Use containers intended for holding waste materials of type to be stored.

4. Coordinate progress cleaning for joint-use areas where Contractor and other contractors are working concurrently.

B. Site: Maintain Project site free of waste materials and debris.

C. Work Areas: Clean areas where Work is in progress to the level of cleanliness necessary for proper execution of the Work.

1. Remove liquid spills promptly.
2. Where dust would impair proper execution of the Work, broom-clean or vacuum the entire work area, as appropriate.

D. Installed Work: Keep installed work clean. Clean installed surfaces according to written instructions of manufacturer or fabricator of product installed, using only cleaning materials specifically recommended. If specific cleaning materials are not recommended, use cleaning materials that are not hazardous to health or property and that will not damage exposed surfaces.

E. Concealed Spaces: Remove debris from concealed spaces before enclosing the space.

F. Exposed Surfaces: Clean exposed surfaces and protect as necessary to ensure freedom from damage and deterioration at time of Substantial Completion.

G. Waste Disposal: Do not bury or burn waste materials on-site. Do not wash waste materials down sewers or into waterways. Comply with waste disposal requirements in Section 015000 "Temporary Facilities and Controls." and Section 017419 "Construction Waste Management and Disposal."

H. During handling and installation, clean and protect construction in progress and adjoining materials already in place. Apply protective covering where required to ensure protection from damage or deterioration at Substantial Completion.

I. Clean and provide maintenance on completed construction as frequently as necessary through the remainder of the construction period. Adjust and lubricate operable components to ensure operability without damaging effects.

J. Limiting Exposures: Supervise construction operations to ensure that no part of the construction, completed or in progress, is subject to harmful, dangerous, damaging, or otherwise deleterious exposure during the construction period.

3.7 PROTECTION OF INSTALLED CONSTRUCTION

A. Provide final protection and maintain conditions that ensure installed Work is without damage or deterioration at time of Substantial Completion.

B. Protection of Existing Items: Provide protection and ensure that existing items to remain undisturbed by construction are maintained in condition that existed at commencement of the Work.

C. Comply with manufacturer's written instructions for temperature and relative humidity.

3.8 CORRECTION OF THE WORK

A. Repair or remove and replace damaged, defective, or nonconforming Work. Restore damaged substrates and finishes.

1. Repairing includes replacing defective parts, refinishing damaged surfaces, touching up with matching materials, and properly adjusting operating equipment.

B. Repair Work previously completed and subsequently damaged during construction period. Repair to like-new condition.

C. Restore permanent facilities used during construction to their specified condition.

D. Remove and replace damaged surfaces that are exposed to view if surfaces cannot be repaired without visible evidence of repair.

E. Repair components that do not operate properly. Remove and replace operating components that cannot be repaired.

F. Remove and replace chipped, scratched, and broken glass or reflective surfaces.

END OF SECTION **017300**

SECTION 017419 - CONSTRUCTION WASTE MANAGEMENT AND DISPOSAL

PART 1 - GENERAL

1.1 SUMMARY

A. Section includes administrative and procedural requirements for the following:

1. Salvaging nonhazardous demolition construction waste.
2. Recycling nonhazardous demolition construction waste.
3. Disposing of nonhazardous demolition construction waste.

1.2 DEFINITIONS

A. Construction Waste: Building, structure, and site improvement materials and other solid waste resulting from construction, remodeling, renovation, or repair operations. Construction waste includes packaging.

B. Demolition Waste: Building, structure, and site improvement materials resulting from demolition operations.

C. Disposal: Removal of demolition or construction waste and subsequent salvage, sale, recycling, or deposit in landfill, incinerator acceptable to authorities having jurisdiction, or designated spoil areas on Owner's property.

D. Recycle: Recovery of demolition or construction waste for subsequent processing in preparation for reuse.

E. Salvage: Recovery of demolition or construction waste and subsequent sale or reuse in another facility.

F. Salvage and Reuse: Recovery of demolition or construction waste and subsequent incorporation into the Work.

1.3 ACTION SUBMITTALS

A. Waste Management Plan: Submit plan within 7 days of date established for the Notice to Proceed.

1.4 INFORMATIONAL SUBMITTALS

A. Waste Reduction Progress Reports: Concurrent with each Application for Payment, submit report. Include the following information:

1. Material category.
2. Generation point of waste.
3. Total quantity of waste in tons.
4. Quantity of waste salvaged, both estimated and actual in tons.
5. Quantity of waste recycled, both estimated and actual in tons.

6. Total quantity of waste recovered (salvaged plus recycled) in tons.
7. Total quantity of waste recovered (salvaged plus recycled) as a percentage of total waste.

B. Waste Reduction Calculations: Before request for Substantial Completion, submit calculated end-of-Project rates for salvage, recycling, and disposal as a percentage of total waste generated by the Work.

C. Recycling and Processing Facility Records: Indicate receipt and acceptance of recyclable waste by recycling and processing facilities licensed to accept them. Include manifests, weight tickets, receipts, and invoices.

D. Landfill and Incinerator Disposal Records: Indicate receipt and acceptance of waste by landfills and incinerator facilities licensed to accept them. Include manifests, weight tickets, receipts, and invoices.

1.5 QUALITY ASSURANCE

A. Waste Management Coordinator Qualifications: Experienced firm, or individual employed and assigned by General Contractor, with a record of successful waste management coordination of projects with similar requirements.

B. Refrigerant Recovery Technician Qualifications: Comply with requirements in Section 024119 "Selective Demolition."

C. Waste Management Conference: Conduct conference at Project site to comply with requirements in Section 013100 "Project Management and Coordination."

1.6 WASTE MANAGEMENT PLAN

A. General: Develop a waste management plan according to requirements in this Section. Plan shall consist of waste identification, waste reduction work plan, and cost/revenue analysis. Distinguish between demolition and construction waste. Indicate quantities by weight or volume, but use same units of measure throughout waste management plan.

B. Waste Identification: Indicate anticipated types and quantities of demolition and construction waste generated by the Work. Include estimated quantities and assumptions for estimates.

C. Waste Reduction Work Plan: List each type of waste and whether it will be salvaged, recycled, or disposed of in landfill or incinerator. Include points of waste generation, total quantity of each type of waste, quantity for each means of recovery, and handling and transportation procedures.

1. Salvaged Materials for Reuse: For materials that will be salvaged and reused in this Project, describe methods for preparing salvaged materials before incorporation into the Work.
2. Salvaged Materials for Sale: For materials that will be sold to individuals and organizations, include list of their names, addresses, and telephone numbers.
3. Salvaged Materials for Donation: For materials that will be donated to individuals and organizations, include list of their names, addresses, and telephone numbers.
4. Recycled Materials: Include list of local receivers and processors and type of recycled materials each will accept. Include names, addresses, and telephone numbers.

5. Disposed Materials: Indicate how and where materials will be disposed of. Include name, address, and telephone number of each landfill and incinerator facility.
6. Handling and Transportation Procedures: Include method that will be used for separating recyclable waste including sizes of containers, container labeling, and designated location where materials separation will be performed.

PART 2 - PRODUCTS (Not Used)

PART 3 - EXECUTION

3.1 PLAN IMPLEMENTATION

A. General: Implement approved waste management plan. Provide handling, containers, storage, signage, transportation, and other items as required to implement waste management plan during the entire duration of the Contract.

B. Training: Train workers, subcontractors, and suppliers on proper waste management procedures, as appropriate for the Work.

1. Distribute waste management plan to everyone concerned within three days of submittal return.
2. Distribute waste management plan to entities when they first begin work on-site. Review plan procedures and locations established for salvage, recycling, and disposal.

C. Site Access and Temporary Controls: Conduct waste management operations to ensure minimum interference with roads, streets, walks, walkways, and other adjacent occupied and used facilities.

1. Designate and label specific areas on Project site necessary for separating materials that are to be salvaged and recycled.
2. Comply with Section 015000 "Temporary Facilities and Controls" for controlling dust and dirt, environmental protection, and noise control.

3.2 SALVAGING DEMOLITION WASTE

A. Comply with requirements in Section 024119 "Selective Demolition" for salvaging demolition waste.

B. Salvaged Items for Reuse in the Work:

1. Clean salvaged items.
2. Pack or crate items after cleaning. Identify contents of containers with label indicating elements, date of removal, quantity, and location where removed.
3. Store items in a secure area until installation.
4. Protect items from damage during transport and storage.
5. Install salvaged items to comply with installation requirements for new materials and equipment. Provide connections, supports, and miscellaneous materials necessary to make items functional for use indicated.

C. Salvaged Items for Sale and Donation: Not permitted on Project site.

D. Salvaged Items for Owner's Use:

1. Clean salvaged items.
2. Pack or crate items after cleaning. Identify contents of containers with label indicating elements, date of removal, quantity, and location where removed.
3. Store items in a secure area until delivery to Owner.
4. Transport items to Owner's storage area designated by Owner.
5. Protect items from damage during transport and storage.

3.3 RECYCLING DEMOLITION CONSTRUCTION WASTE, GENERAL

A. General: Recycle paper and beverage containers used by on-site workers.

B. Recycling Incentives: Revenues, savings, rebates, tax credits, and other incentives received for recycling waste materials shall accrue to Contractor.

C. Preparation of Waste: Prepare and maintain recyclable waste materials according to recycling or reuse facility requirements. Maintain materials free of dirt, adhesives, solvents, petroleum contamination, and other substances deleterious to the recycling process.

D. Procedures: Separate recyclable waste from other waste materials, trash, and debris. Separate recyclable waste by type at Project site to the maximum extent practical according to approved construction waste management plan.

1. Provide appropriately marked containers or bins for controlling recyclable waste until removed from Project site. Include list of acceptable and unacceptable materials at each container and bin.

    a. Inspect containers and bins for contamination and remove contaminated materials if found.

2. Stockpile processed materials on-site without intermixing with other materials. Place, grade, and shape stockpiles to drain surface water. Cover to prevent windblown dust.
3. Stockpile materials away from construction area. Do not store within drip line of remaining trees.
4. Store components off the ground and protect from the weather.
5. Remove recyclable waste from Owner's property and transport to recycling receiver or processor as often as required to prevent overfilling bins.

3.4 RECYCLING DEMOLITION WASTE

A. Metals: Separate metals by type.

1. Structural Steel: Stack members according to size, type of member, and length.
2. Remove and dispose of bolts, nuts, washers, and other rough hardware.

B. Piping: Reduce piping to straight lengths and store by material and size. Separate supports, hangers, valves, sprinklers, and other components by material and size.

C. Conduit: Reduce conduit to straight lengths and store by material and size.

3.5 RECYCLING CONSTRUCTION WASTE

A. Packaging:

1. Cardboard and Boxes: Break down packaging into flat sheets. Bundle and store in a dry location.
2. Polystyrene Packaging: Separate and bag materials.
3. Pallets: As much as possible, require deliveries using pallets to remove pallets from Project site. For pallets that remain on-site, break down pallets into component wood pieces and comply with requirements for recycling wood.
4. Crates: Break down crates into component wood pieces and comply with requirements for recycling wood.

B. Wood Materials:

1. Clean Cut-Offs of Lumber: Grind or chip into small pieces.
2. Clean Sawdust: Bag sawdust that does not contain painted or treated wood.

C. Gypsum Board: Stack large clean pieces on wood pallets or in container and store in a dry location.

1. Clean Gypsum Board: Grind scraps of clean gypsum board using small mobile chipper or hammer mill. Screen out paper after grinding.

D. Paint: Seal containers and store by type.

3.6 DISPOSAL OF WASTE

A. General: Except for items or materials to be salvaged or recycled, remove waste materials from Project site and legally dispose of them in a landfill or incinerator acceptable to authorities having jurisdiction.

1. Except as otherwise specified, do not allow waste materials that are to be disposed of accumulate on-site.
2. Remove and transport debris in a manner that will prevent spillage on adjacent surfaces and areas.

B. Burning: Do not burn waste materials.

END OF SECTION **017419**

THIS SHEET INTENTIONALLY LEFT BLANK

SECTION 017700 - CLOSEOUT PROCEDURES

PART 1 - GENERAL

1.1 SUMMARY

A. Section includes administrative and procedural requirements for Contract closeout, including, but not limited to, the following:

1. Substantial Completion procedures.
2. Final completion procedures.
3. Warranties.
4. Final cleaning.

B. Related Requirements:

1. Section 017823 "Operation and Maintenance Data" for additional operation and maintenance manual requirements.
2. Section 017900 "Demonstration and Training" for requirements to train the Owner's maintenance personnel to adjust, operate, and maintain products, equipment, and systems.

1.2 ACTION SUBMITTALS

A. Product Data: For each type of cleaning agent.

B. Contractor's List of Incomplete Items: Initial submittal at Substantial Completion.

C. Certified List of Incomplete Items: Final submittal at Final Completion.

1.3 CLOSEOUT SUBMITTALS

A. Certificates of Release: From authorities having jurisdiction.

B. Certificate of Insurance: For continuing coverage.

C. Field Report: For pest-control inspection.

1.4 SUBSTANTIAL COMPLETION PROCEDURES

A. Contractor's List of Incomplete Items: Prepare and submit a list of items to be completed and corrected (Contractor's "punch list"), indicating the value of each item on the list and reasons why the Work is incomplete.

B. Submittals Prior to Substantial Completion: Complete the following a minimum of 10 days prior to requesting inspection for determining date of Substantial Completion. List items below that are incomplete at time of request.

1. Certificates of Release: Obtain and submit releases from authorities having jurisdiction, permitting Owner unrestricted use of the Work and access to services and utilities. Include occupancy permits, operating certificates, and similar releases.
2. Submit closeout submittals specified in other Division 01 Sections, including Project Record Documents, operation and maintenance manuals, damage or settlement surveys, property surveys, and similar final record information.
3. Submit closeout submittals specified in individual Sections, including specific warranties, workmanship bonds, maintenance service agreements, final certifications, and similar documents.
4. Submit maintenance material submittals specified in individual Sections, including tools, spare parts, extra materials, and similar items, and deliver to location designated by Architect. Label with manufacturer's name and model number.
5. Submit testing, adjusting, and balancing records.
6. Submit sustainable design submittals not previously submitted.
7. Submit changeover information related to Owner's occupancy, use, operation, and maintenance.

C. Procedures Prior to Substantial Completion: Complete the following a minimum of 10 days prior to requesting inspection for determining date of Substantial Completion. List items below that are incomplete at time of request.

1. Advise Owner of pending insurance changeover requirements.
2. Make final changeover of permanent locks and deliver keys to Owner. Advise Owner's personnel of changeover in security provisions.
3. Complete startup and testing of systems and equipment.
4. Perform preventive maintenance on equipment used prior to Substantial Completion.
5. Instruct Owner's personnel in operation, adjustment, and maintenance of products, equipment, and systems. Submit demonstration and training video recordings specified in Section 017900 "Demonstration and Training."
6. Advise Owner of changeover in utility services.
7. Participate with Owner in conducting inspection and walkthrough with local emergency responders.
8. Terminate and remove temporary facilities from Project site, along with mockups, construction tools, and similar elements.
9. Complete final cleaning requirements.
10. Touch up paint and otherwise repair and restore marred exposed finishes to eliminate visual defects.

D. Inspection: Submit a written request for inspection to determine Substantial Completion a minimum of 10 days prior to date the Work will be completed and ready for final inspection and tests. On receipt of request, Architect will either proceed with inspection or notify Contractor of unfulfilled requirements. Architect will prepare the Certificate of Substantial Completion after inspection or will notify Contractor of items, either on Contractor's list or additional items identified by Architect, that must be completed or corrected before certificate will be issued.

1.5 FINAL COMPLETION PROCEDURES

A. Submittals Prior to Final Completion: Before requesting final inspection for determining Final Completion, complete the following:

1. Submit a final Application for Payment in accordance with Section 012900 "Payment Procedures."

2. Certified List of Incomplete Items: Submit certified copy of Architect's Substantial Completion inspection list of items to be completed or corrected (punch list), endorsed and dated by Architect. Certified copy of the list shall state that each item has been completed or otherwise resolved for acceptance.
3. Certificate of Insurance: Submit evidence of final, continuing insurance coverage complying with insurance requirements.
4. Submit pest-control final inspection report.

B. Inspection: Submit a written request for final inspection to determine acceptance a minimum of 10 days prior to date the Work will be completed and ready for final inspection and tests. On receipt of request, Architect will either proceed with inspection or notify Contractor of unfulfilled requirements. Architect will prepare a final Certificate for Payment after inspection or will notify Contractor of construction that must be completed or corrected before certificate will be issued.

1.6 LIST OF INCOMPLETE ITEMS

A. Organization of List: Include name and identification of each space and area affected by construction operations for incomplete items and items needing correction including, if necessary, areas disturbed by Contractor that are outside the limits of construction.

1. Organize list of spaces in sequential order, listed by orientation (East to West) on roof.
2. Organize items applying to each space by major element, including categories for roof system, wall flashing, and equipment.
3. Include the following information at the top of each page:

    a. Project name.
    b. Date.
    c. Name of Architect.
    d. Name of Contractor.
    e. Page number.

4. Submit list of incomplete items in the following format:

    a. MS Excel Electronic File: Architect will return annotated file.
    b. Web-Based Project Software Upload: Utilize software feature for creating and updating list of incomplete items (punch list).

1.7 SUBMITTAL OF PROJECT WARRANTIES

A. Time of Submittal: Submit written warranties on request of Architect for designated portions of the Work where warranties are indicated to commence on dates other than date of Substantial Completion, or when delay in submittal of warranties might limit Owner's rights under warranty.

B. Organize warranty documents into an orderly sequence based on the table of contents of Project Manual.

C. Warranty Electronic File: Provide warranties and bonds in PDF format. Assemble complete warranty and bond submittal package into a single electronic PDF file with bookmarks enabling navigation to each item. Provide bookmarked table of contents at beginning of document.

1. Submit on digital media acceptable to Owner and by uploading to web-based project software site.

PART 2 - PRODUCTS

2.1 MATERIALS

A. Cleaning Agents: Use cleaning materials and agents recommended by manufacturer or fabricator of the surface to be cleaned. Do not use cleaning agents that are potentially hazardous to health or property or that might damage finished surfaces.

1. Use cleaning products that comply with Green Seal's GS-37, or if GS-37 is not applicable, use products that comply with the California Code of Regulations maximum allowable VOC levels.

PART 3 - EXECUTION

3.1 FINAL CLEANING

A. Perform final cleaning. Conduct cleaning and waste-removal operations to comply with local laws and ordinances and Federal and local environmental and antipollution regulations.

B. Cleaning: Employ experienced workers or professional cleaners for final cleaning. Clean each surface or unit to condition expected in an average commercial building cleaning and maintenance program. Comply with manufacturer's written instructions.

1. Complete the following cleaning operations before requesting inspection for certification of Substantial Completion for entire Project or for a designated portion of Project:

a. Clean Project site of rubbish, waste material, litter, and other foreign substances.
b. Clean exposed exterior and interior hard-surfaced finishes to a dirt-free condition, free of stains, films, and similar foreign substances. Avoid disturbing natural weathering of exterior surfaces. Restore reflective surfaces to their original condition.
c. Remove debris and surface dust from limited-access spaces, including roofs, plenums, shafts, trenches, equipment vaults, manholes, attics, and similar spaces.
d. Clean flooring, removing debris, dirt, and staining; clean according to manufacturer's recommendations.
e. Vacuum and mop concrete.
f. Vacuum carpet and similar soft surfaces, removing debris and excess nap; clean according to manufacturer's recommendations if visible soil or stains remain.
g. Clean transparent materials, including mirrors and glass in doors and windows. Remove glazing compounds and other noticeable, vision-obscuring materials. Polish mirrors and glass, taking care not to scratch surfaces.
h. Remove labels that are not permanent.
i. Wipe surfaces of mechanical and electrical equipment[, elevator equipment,] and similar equipment. Remove excess lubrication, paint and mortar droppings, and other foreign substances.
j. Clean plumbing fixtures to a sanitary condition, free of stains, including stains resulting from water exposure.
k. Replace disposable air filters and clean permanent air filters. Clean exposed surfaces of diffusers, registers, and grills.
l. Clean ducts, blowers, and coils[if units were operated without filters during construction or that display contamination with particulate matter on inspection].

1) Clean HVAC system in compliance with [NADCA ACR.] [Section 230130.52 "Existing HVAC Air-Distribution System Cleaning."]

m. Clean luminaires, lamps, globes, and reflectors to function with full efficiency.
n. Clean strainers.
o. Leave Project clean and ready for occupancy.

C. Pest Control: Comply with pest control requirements in Section 015000 "Temporary Facilities and Controls." Prepare written report.

D. Construction Waste Disposal: Comply with waste-disposal requirements in Section 015000 "Temporary Facilities and Controls." and Section 017419 "Construction Waste Management and Disposal."

3.2 REPAIR OF THE WORK

A. Complete repair and restoration operations required by Section 017300 "Execution" before requesting inspection for determination of Substantial Completion.

END OF SECTION **017700**

THIS SHEET INTENTIONALLY LEFT BLANK

SECTION 017823 - OPERATION AND MAINTENANCE DATA

PART 1 - GENERAL

1.1 SUMMARY

A. Section includes administrative and procedural requirements for preparing operation and maintenance manuals, including the following:

1. Operation and maintenance documentation directory manuals.
2. Emergency manuals.
3. Systems and equipment operation manuals.
4. Systems and equipment maintenance manuals.
5. Product maintenance manuals.

1.2 CLOSEOUT SUBMITTALS

A. Submit operation and maintenance manuals indicated. Provide content for each manual as specified in individual Specification Sections, and as reviewed and approved at the time of Section submittals. Submit reviewed manual content formatted and organized as required by this Section.

1. Architect will comment on whether content of operation and maintenance submittals is acceptable.
2. Where applicable, clarify and update reviewed manual content to correspond to revisions and field conditions.

B. Format: Submit operation and maintenance manuals in the following format:

1. Submit on digital media acceptable to Owner and by uploading to web-based project software site. Enable reviewer comments on draft submittals.

C. Final Manual Submittal: Submit each manual in final form prior to requesting inspection for Substantial Completion and at least 15 days before commencing demonstration and training. Architect will return copy with comments.

1. Correct or revise each manual to comply with Architect's comments. Submit copies of each corrected manual within 15 days of receipt of Architect's comments and prior to commencing demonstration and training.

D. Comply with Section 017700 "Closeout Procedures" for schedule for submitting operation and maintenance documentation.

1.3 FORMAT OF OPERATION AND MAINTENANCE MANUALS

A. Manuals, Electronic Files: Submit manuals in the form of a multiple file composite electronic PDF file for each manual type required.

1. Electronic Files: Use electronic files prepared by manufacturer where available. Where scanning of paper documents is required, configure scanned file for minimum readable file size.
2. File Names and Bookmarks: Bookmark individual documents based on file names. Name document files to correspond to system, subsystem, and equipment names used in manual directory and table of contents. Group documents for each system and subsystem into individual composite bookmarked files, then create composite manual, so that resulting bookmarks reflect the system, subsystem, and equipment names in a readily navigated file tree. Configure electronic manual to display bookmark panel on opening file.

1.4 REQUIREMENTS FOR EMERGENCY, OPERATION, AND MAINTENANCE MANUALS

A. Provide Manuals as required by the Owner based on the scope of work in the project.

B. Organization of Manuals: Unless otherwise indicated, organize each manual into a separate section for each system and subsystem, and a separate section for each piece of equipment not part of a system. Each manual shall contain the following materials, in the order listed:

1. Title page.
2. Table of contents.
3. Manual contents.

C. Title Page: Include the following information:

1. Subject matter included in manual.
2. Name and address of Project.
3. Name and address of Owner.
4. Date of submittal.
5. Name and contact information for Contractor.
6. Name and contact information for Construction Manager.
7. Name and contact information for Architect.
8. Name and contact information for Commissioning Authority.
9. Names and contact information for major consultants to the Architect that designed the systems contained in the manuals.
10. Cross-reference to related systems in other operation and maintenance manuals.

D. Table of Contents: List each product included in manual, identified by product name, indexed to the content of the volume, and cross-referenced to Specification Section number in Project Manual.

E. Manual Contents: Organize into sets of manageable size. Arrange contents alphabetically by system, subsystem, and equipment. If possible, assemble instructions for subsystems, equipment, and components of one system into a single binder.

F. Identification: In the documentation directory and in each operation and maintenance manual, identify each system, subsystem, and piece of equipment with same designation used in the Contract Documents. If no designation exists, assign a designation according to ASHRAE Guideline 4, "Preparation of Operating and Maintenance Documentation for Building Systems."

1.5 EMERGENCY MANUALS

A. Emergency Manual: Assemble a complete set of emergency information indicating procedures for use by emergency personnel and by Owner's operating personnel for types of emergencies indicated.

B. Content: Organize manual into a separate section for each of the following:

1. Type of emergency.
2. Emergency instructions.
3. Emergency procedures.

C. Type of Emergency: Where applicable for each type of emergency indicated below, include instructions and procedures for each system, subsystem, piece of equipment, and component:

1. Fire.
2. Flood.
3. Gas leak.
4. Water leak.
5. Power failure.
6. Water outage.
7. System, subsystem, or equipment failure.
8. Chemical release or spill.

D. Emergency Instructions: Describe and explain warnings, trouble indications, error messages, and similar codes and signals. Include responsibilities of Owner's operating personnel for notification of Installer, supplier, and manufacturer to maintain warranties.

E. Emergency Procedures: Include the following, as applicable:

1. Instructions on stopping.
2. Shutdown instructions for each type of emergency.
3. Operating instructions for conditions outside normal operating limits.
4. Required sequences for electric or electronic systems.
5. Special operating instructions and procedures.

1.6 SYSTEMS AND EQUIPMENT OPERATION MANUALS

A. Systems and Equipment Operation Manual: Assemble a complete set of data indicating operation of each system, subsystem, and piece of equipment not part of a system. Include information required for daily operation and management, operating standards, and routine and special operating procedures.

B. Content: In addition to requirements in this Section, include operation data required in individual Specification Sections and the following information:

1. System, subsystem, and equipment descriptions. Use designations for systems and equipment indicated on Contract Documents.
2. Performance and design criteria if Contractor has delegated design responsibility.
3. Operating standards.
4. Operating procedures.
5. Operating logs.
6. Wiring diagrams.
7. Control diagrams.

8. Piped system diagrams.
9. Precautions against improper use.
10. License requirements including inspection and renewal dates.

C. Descriptions: Include the following:

1. Product name and model number. Use designations for products indicated on Contract Documents.
2. Manufacturer's name.
3. Equipment identification with serial number of each component.
4. Equipment function.
5. Operating characteristics.
6. Limiting conditions.
7. Performance curves.
8. Engineering data and tests.
9. Complete nomenclature and number of replacement parts.

D. Operating Procedures: Include the following, as applicable:

1. Startup procedures.
2. Equipment or system break-in procedures.
3. Routine and normal operating instructions.
4. Regulation and control procedures.
5. Instructions on stopping.
6. Normal shutdown instructions.
7. Seasonal and weekend operating instructions.
8. Required sequences for electric or electronic systems.
9. Special operating instructions and procedures.

E. Systems and Equipment Controls: Describe the sequence of operation, and diagram controls as installed.

F. Piped Systems: Diagram piping as installed and identify color coding where required for identification.

1.7 SYSTEMS AND EQUIPMENT MAINTENANCE MANUALS

A. Systems and Equipment Maintenance Manuals: Assemble a complete set of data indicating maintenance of each system, subsystem, and piece of equipment not part of a system. Include manufacturers' maintenance documentation, preventive maintenance procedures and frequency, repair procedures, wiring and systems diagrams, lists of spare parts, and warranty information.

B. Content: For each system, subsystem, and piece of equipment not part of a system, include source information, manufacturers' maintenance documentation, maintenance procedures, maintenance and service schedules, spare parts list and source information, maintenance service contracts, and warranties and bonds, as described below.

C. Manufacturers' Maintenance Documentation: Include the following information for each component part or piece of equipment:

1. Standard maintenance instructions and bulletins; include only sheets pertinent to product or component installed. Mark each sheet to identify each product or component incorporated into the Work. If data include more than one item in a tabular format, identify each item using appropriate references from the Contract Documents. Identify data applicable to the Work and delete references to information not applicable.

    a. Prepare supplementary text if manufacturers' standard printed data are not available and where the information is necessary for proper operation and maintenance of equipment or systems.

2. Drawings, diagrams, and instructions required for maintenance, including disassembly and component removal, replacement, and assembly.
3. Identification and nomenclature of parts and components.
4. List of items recommended to be stocked as spare parts.

D. Maintenance Procedures: Include the following information and items that detail essential maintenance procedures:

1. Test and inspection instructions.
2. Troubleshooting guide.
3. Precautions against improper maintenance.
4. Disassembly; component removal, repair, and replacement; and reassembly instructions.
5. Aligning, adjusting, and checking instructions.
6. Demonstration and training video recording, if available.

E. Maintenance and Service Schedules: Include service and lubrication requirements, list of required lubricants for equipment, and separate schedules for preventive and routine maintenance and service with standard time allotment.

F. Spare Parts List and Source Information: Include lists of replacement and repair parts, with parts identified and cross-referenced to manufacturers' maintenance documentation and local sources of maintenance materials and related services.

G. Warranties and Bonds: Include copies of warranties and bonds and lists of circumstances and conditions that would affect validity of warranties or bonds.

1. Include procedures to follow and required notifications for warranty claims.

H. Drawings: Prepare drawings supplementing manufacturers' printed data to illustrate the relationship of component parts of equipment and systems and to illustrate control sequence and flow diagrams. Coordinate these drawings with information contained in record Drawings to ensure correct illustration of completed installation.

1.8 PRODUCT MAINTENANCE MANUALS

A. Product Maintenance Manual: Assemble a complete set of maintenance data indicating care and maintenance of each product, material, and finish incorporated into the Work.

B. Content: Organize manual into a separate section for each product, material, and finish. Include source information, product information, maintenance procedures, repair materials and sources, and warranties and bonds, as described below.

C. Product Information: Include the following, as applicable:

1. Product name and model number.
2. Manufacturer's name.
3. Color, pattern, and texture.
4. Material and chemical composition.
5. Reordering information for specially manufactured products.

D. Maintenance Procedures: Include manufacturer's written recommendations and the following:

1. Inspection procedures.
2. Types of cleaning agents to be used and methods of cleaning.
3. List of cleaning agents and methods of cleaning detrimental to product.
4. Schedule for routine cleaning and maintenance.
5. Repair instructions.

E. Repair Materials and Sources: Include lists of materials and local sources of materials and related services.

F. Warranties and Bonds: Include copies of warranties and bonds and lists of circumstances and conditions that would affect validity of warranties or bonds.

1. Include procedures to follow and required notifications for warranty claims.

PART 2 - PRODUCTS (Not Used)

PART 3 - EXECUTION (Not Used)

END OF SECTION **017823**

SECTION 017839 - PROJECT RECORD DOCUMENTS

PART 1 - GENERAL

1.1 SUMMARY

A. Section includes administrative and procedural requirements for Project Record Documents, including the following:

1. Record Drawings.
2. Record specifications.
3. Record Product Data.

B. Related Requirements:

1. Section 017823 "Operation and Maintenance Data" for operation and maintenance manual requirements.

1.2 CLOSEOUT SUBMITTALS

A. Record Drawings: Comply with the following:

1. Number of Copies: Submit one set(s) of marked-up record prints.
2. Number of Copies: Submit copies of Record Drawings as follows:

a. Initial Submittal:

1) Submit PDF electronic files of scanned record prints.
2) Submit Record Digital Data Files.
3) Architect will indicate whether general scope of changes, additional information recorded, and quality of drafting are acceptable.

b. Final Submittal:

1) Submit 2 sets of annotated PDF electronic files of scanned Record Prints on individual digital flash memory sticks and one set uploaded to the project website.
2) Print each drawing, whether or not changes and additional information were recorded.

B. Record Specifications: Submit 2 sets of annotated PDF electronic files on individual digital flash memory sticks (may be shared with Record Drawings) and one copy of Project's Specifications, including addenda and Contract modifications uploaded to the project website.

C. Record Product Data: Submit 2 sets of annotated PDF electronic files on individual digital flash memory sticks (may be shared with Record Drawings & Specs) and one copy uploaded to the project website of each submittal.

1. Where record Product Data are required as part of operation and maintenance manuals, submit duplicate marked-up Product Data as a component of manual.

1.3 RECORD DRAWINGS

A. Record Prints: Maintain one set of marked-up paper copies of the Contract Drawings and Shop Drawings, incorporating new and revised drawings as modifications are issued.

1. Preparation: Mark record prints to show the actual installation, where installation varies from that shown originally. Require individual or entity who obtained record data, whether individual or entity is Installer, subcontractor, or similar entity, to provide information for preparation of corresponding marked-up record prints.

    a. Give particular attention to information on concealed elements that would be difficult to identify or measure and record later.
    b. Accurately record information in an acceptable drawing technique.
    c. Record data as soon as possible after obtaining it.
    d. Record and check the markup before enclosing concealed installations.
    e. Cross-reference record prints to corresponding photographic documentation.

2. Content: Types of items requiring marking include, but are not limited to, the following:

    a. Dimensional changes to Drawings.
    b. Revisions to details shown on Drawings.
    c. Depths of foundations.
    d. Locations and depths of underground utilities.
    e. Revisions to routing of piping and conduits.
    f. Revisions to electrical circuitry.
    g. Actual equipment locations.
    h. Duct size and routing.
    i. Locations of concealed internal utilities.
    j. Changes made by Change Order or Construction Change Directive.
    k. Changes made following Architect's written orders.
    l. Details not on the original Contract Drawings.
    m. Field records for variable and concealed conditions.
    n. Record information on the Work that is shown only schematically.

3. Mark the Contract Drawings and Shop Drawings completely and accurately. Use personnel proficient at recording graphic information in production of marked-up record prints.
4. Mark record prints with erasable, red-colored pencil. Use other colors to distinguish between changes for different categories of the Work at same location.
5. Mark important additional information that was either shown schematically or omitted from original Drawings.
6. Note Construction Change Directive numbers, alternate numbers, Change Order numbers, and similar identification, where applicable.

B. Record Digital Data Files: Immediately before inspection for Certificate of Substantial Completion, review marked-up record prints with Architect. When authorized, prepare a full set of corrected digital data files of the Contract Drawings, as follows:

1. Format: Annotated PDF electronic file.
2. Incorporate changes and additional information previously marked on record prints. Delete, redraw, and add details and notations where applicable.
3. Refer instances of uncertainty to Architect for resolution.

C. Format: Identify and date each Record Drawing; include the designation "PROJECT RECORD DRAWING" in a prominent location.

1. Record Prints: Organize record prints into manageable sets. Bind each set with durable paper cover sheets. Include identification on cover sheets.
2. Format: Annotated PDF electronic file.
3. Record Digital Data Files: Organize digital data information into separate electronic files that correspond to each sheet of the Contract Drawings. Name each file with the sheet identification. Include identification in each digital data file.
4. Identification: As follows:

    a. Project name.
    b. Date.
    c. Designation "PROJECT RECORD DRAWINGS."
    d. Name of Architect.
    e. Name of Contractor.

1.4 RECORD SPECIFICATIONS

A. Preparation: Mark Specifications to indicate the actual product installation, where installation varies from that indicated in Specifications, addenda, and Contract modifications.

1. Give particular attention to information on concealed products and installations that cannot be readily identified and recorded later.
2. Mark copy with the proprietary name and model number of products, materials, and equipment furnished, including substitutions and product options selected.
3. Record the name of manufacturer, supplier, Installer, and other information necessary to provide a record of selections made.
4. For each principal product, indicate whether Record Product Data has been submitted in operation and maintenance manuals instead of submitted as Record Product Data.
5. Note related Change Orders, Record Product Data, and Record Drawings where applicable.

B. Format: Submit record specifications as annotated PDF electronic file of marked-up paper copy of Specifications.

1.5 RECORD PRODUCT DATA

A. Recording: Maintain one copy of each submittal during the construction period for Project Record Document purposes. Post changes and revisions to Project Record Documents as they occur; do not wait until end of Project.

B. Preparation: Mark Product Data to indicate the actual product installation where installation varies substantially from that indicated in Product Data submittal.

1. Give particular attention to information on concealed products and installations that cannot be readily identified and recorded later.
2. Include significant changes in the product delivered to Project site and changes in manufacturer's written instructions for installation.
3. Note related Change Orders, Record Specifications, and Record Drawings where applicable.

C. Format: Submit Record Product Data as annotated PDF electronic file of marked-up Product Data.

1. Include Record Product Data directory organized by Specification Section number and title, electronically linked to each item of Record Product Data.

1.6 MAINTENANCE OF RECORD DOCUMENTS

A. Maintenance of Record Documents: Store Record Documents in the field office apart from the Contract Documents used for construction. Do not use Project Record Documents for construction purposes. Maintain Record Documents in good order and in a clean, dry, legible condition, protected from deterioration and loss. Provide access to Project Record Documents for Architect's reference during normal working hours.

PART 2 - PRODUCTS (Not Used)

PART 3 - EXECUTION (Not Used)

END OF SECTION **017839**

SECTION 017900 - DEMONSTRATION AND TRAINING

PART 1 - GENERAL

1.1 SUMMARY

A. Section includes administrative and procedural requirements for instructing Owner's personnel, including the following:

1. Instruction in operation and maintenance of systems, subsystems, and equipment.
2. Demonstration and training video recordings.

1.2 INFORMATIONAL SUBMITTALS

A. Instruction Program: Submit outline of instructional program for demonstration and training, including a list of training modules and a schedule of proposed dates, times, length of instruction time, and instructors' names for each training module. Include learning objective and outline for each training module.

1. Indicate proposed training modules using manufacturer-produced demonstration and training video recordings for systems, equipment, and products in lieu of video recording of live instructional module.

1.3 CLOSEOUT SUBMITTALS

A. Demonstration and Training Video Recordings: Submit two copies within seven days of end of each training module.

1. At completion of training, submit complete training manual(s) for Owner's use prepared in same paper and PDF file format required for operation and maintenance manuals specified in Section 017823 "Operation and Maintenance Data."

1.4 QUALITY ASSURANCE

A. Facilitator Qualifications: A firm or individual experienced in training or educating maintenance personnel in a training program similar in content and extent to that indicated for this Project, and whose work has resulted in training or education with a record of successful learning performance.

B. Instructor Qualifications: A factory-authorized service representative, experienced in operation and maintenance procedures and training.

C. Preinstruction Conference: Conduct conference at Project site to comply with requirements in Section 013100 "Project Management and Coordination."

1.5 COORDINATION

A. Coordinate instruction schedule with Owner's operations. Adjust schedule as required to minimize disrupting Owner's operations and to ensure availability of Owner's personnel.

B. Coordinate instructors, including providing notification of dates, times, length of instruction time, and course content.

C. Coordinate content of training modules with content of approved emergency, operation, and maintenance manuals. Do not submit instruction program until operation and maintenance data have been reviewed and approved by Architect.

1.6 INSTRUCTION PROGRAM

A. Program Structure: Develop an instruction program that includes individual training modules for each system and for equipment not part of a system, as required by individual Specification Sections.

B. Training Modules: Develop a learning objective and teaching outline for each module. Include a description of specific skills and knowledge that participant is expected to master. For each module, include instruction for the following as applicable to the system, equipment, or component:

1. Basis of System Design, Operational Requirements, and Criteria: Include the following:

    a. System, subsystem, and equipment descriptions.
    b. Performance and design criteria if Contractor is delegated design responsibility.
    c. Operating standards.
    d. Regulatory requirements.
    e. Equipment function.
    f. Operating characteristics.
    g. Limiting conditions.
    h. Performance curves.

2. Documentation: Review the following items in detail:

    a. Emergency manuals.
    b. Systems and equipment maintenance manuals.
    c. Product maintenance manuals.
    d. Project Record Documents.
    e. Identification systems.
    f. Warranties and bonds.
    g. Maintenance service agreements and similar continuing commitments.

3. Troubleshooting: Include the following:

    a. Diagnostic instructions.
    b. Test and inspection procedures.

4. Maintenance: Include the following:

    a. Inspection procedures.
    b. Types of cleaning agents to be used and methods of cleaning.
    c. List of cleaning agents and methods of cleaning detrimental to product.

d. Procedures for routine cleaning.
e. Procedures for preventive maintenance.
f. Procedures for routine maintenance.
g. Instruction on use of special tools.

5. Repairs: Include the following:

a. Diagnosis instructions.
b. Repair instructions.
c. Disassembly; component removal, repair, and replacement; and reassembly instructions.
d. Instructions for identifying parts and components.
e. Review of spare parts needed for operation and maintenance.

1.7 PREPARATION

A. Assemble educational materials necessary for instruction, including documentation and training module. Assemble training modules into a training manual organized in coordination with requirements in Section 017823 "Operation and Maintenance Data."

B. Set up instructional equipment at instruction location.

1.8 INSTRUCTION

A. Facilitator: Engage a qualified facilitator to prepare instruction program and training modules, to coordinate instructors, and to coordinate between Contractor and Owner for number of participants, instruction times, and location.

B. Engage qualified instructors to instruct Owner's personnel to adjust, operate, and maintain systems, subsystems, and equipment not part of a system.

C. Scheduling: Provide instruction at mutually agreed-on times. For equipment that requires seasonal operation, provide similar instruction at start of each season.

1. Schedule training with Owner, with at least seven days' advance notice.

D. Training Location and Reference Material: Conduct training on-site in the completed and fully operational facility using the actual equipment in-place. Conduct training using final operation and maintenance data submittals.

E. Evaluation: At conclusion of each training module, assess and document each participant's mastery of module by use of an oral performance-based test.

F. Cleanup: Collect used and leftover educational materials and remove from Project site. Remove instructional equipment. Restore systems and equipment to condition existing before initial training use.

1.9 DEMONSTRATION AND TRAINING VIDEO RECORDINGS

A. General: Engage a qualified commercial videographer to record demonstration and training video recordings. Record each training module separately. Include classroom instructions and demonstrations, board diagrams, and other visual aids, but not student practice.

1. At beginning of each training module, record each chart containing learning objective and lesson outline.

B. Digital Video Recordings: Provide high-resolution, digital video in MPEG format, produced by a digital camera with minimum sensor resolution of 12 megapixels and capable of recording in full HD mode with vibration reduction technology.

1. Submit 2 copies of video recordings on individual thumb drives by uploading to web-based Project software site.

C. Recording: Mount camera on tripod before starting recording, unless otherwise necessary to adequately cover area of demonstration and training. Display continuous running time.

D. Light Levels: Verify light levels are adequate to properly light equipment. Verify equipment markings are clearly visible prior to recording.

E. Preproduced Video Recordings: Provide video recordings used as a component of training modules in same format as recordings of live training.

PART 2 - PRODUCTS (NOT USED)

PART 3 - EXECUTION (NOT USED)

END OF SECTION **017900**

SECTION 024119 - SELECTIVE DEMOLITION

PART 1 - GENERAL

1.1 SUMMARY

A. Section Includes:

1. Demolition and removal of selected portions of building or structure.
2. Salvage of existing items to be reused or recycled.

1.2 MATERIALS OWNERSHIP

A. Unless otherwise indicated, demolition waste becomes property of Contractor.

B. Historic items, relics, antiques, and similar objects including, but not limited to, cornerstones and their contents, commemorative plaques and tablets, and other items of interest or value to Owner that may be uncovered during demolition remain the property of Owner.

1. Carefully salvage in a manner to prevent damage and promptly return to Owner.

1.3 PREINSTALLATION MEETINGS

A. Predemolition Conference: Conduct conference at Project site.

B. General Contractor shall set a meeting at a time convenient to all parties, no later than 14 days before start of demolition and shall include Architect, Owner and Service Providers that have equipment mounted on the roof.

1.4 INFORMATIONAL SUBMITTALS

A. Engineering Survey: Submit engineering survey of condition of building.

B. Proposed Protection Measures: Submit report, including Drawings, that indicates the measures proposed for protecting individuals and property, for dust and debris control and for noise control. Indicate proposed locations and construction of barriers.

C. Schedule of selective demolition activities, with starting and ending dates for each activity.

D. Predemolition photographs or video.

E. Statement of Refrigerant Recovery: Signed by refrigerant recovery technician.

1.5 CLOSEOUT SUBMITTALS

A. Inventory of items that have been removed and salvaged.

1.6 QUALITY ASSURANCE

A. Refrigerant Recovery Technician Qualifications: Certified by an EPA-approved certification program.

1.7 FIELD CONDITIONS

A. Owner will occupy portions of building immediately adjacent to selective demolition area. Conduct selective demolition so Owner's operations will not be disrupted.

B. Conditions existing at time of inspection for bidding purpose will be maintained by Owner as far as practical.

1. Before selective demolition General Contractor shall meet at the site with the Architect, Owner and Service Providers that have equipment on the roof to determine if any platforms, equipment, cabling, piping or other items under control of the Service Providers must be modified to allow work to proceed.

C. Notify Architect of discrepancies between existing conditions and Drawings before proceeding with selective demolition.

D. Hazardous Materials: It is not expected that hazardous materials will be encountered in the Work.

1. If suspected hazardous materials are encountered, do not disturb; immediately notify Architect and Owner. Hazardous materials will be removed by Owner under a separate contract.

E. Storage or sale of removed items or materials on-site is not permitted.

F. Utility Service: Maintain existing utilities indicated to remain in service and protect them against damage during selective demolition operations.

1. Maintain fire-protection facilities in service during selective demolition operations.
2. Coordinate with Service Providers to limit interruptions while maintaining worker safety.

G. Arrange selective demolition schedule so as not to interfere with Owner's operations.

1.8 WARRANTY

A. Existing Warranties: Remove, replace, patch, and repair materials and surfaces cut or damaged during selective demolition, by methods and with materials and using approved contractors so as not to void existing warranties.

PART 2 - PRODUCTS

2.1 PERFORMANCE REQUIREMENTS

A. Regulatory Requirements: Comply with governing EPA notification regulations before beginning selective demolition. Comply with hauling and disposal regulations of authorities having jurisdiction.

B. Standards: Comply with ANSI/ASSP A10.6 and NFPA 241.

C. Sustainable Design Requirements for Building Reuse:

1. Maintain existing interior nonstructural elements (interior walls, doors, floor coverings, and ceiling systems) not indicated to be demolished; do not demolish such existing construction beyond indicated limits.
2. Maintain the existing building structure, envelope, and interior nonstructural elements of a historic building or contributing building in a historic district. Do not demolish such existing construction beyond indicated limits.
3. Maintain the existing building facade where indicated to remain. Do not demolish such existing construction beyond indicated limits.

PART 3 - EXECUTION

3.1 EXAMINATION

A. Verify that utilities have been disconnected and capped before starting selective demolition operations.

B. Perform an engineering survey of condition of building to determine whether removing any element might result in structural deficiency or unplanned collapse of any portion of structure or adjacent structures during selective building demolition operations.

C. Inventory and record the condition of items to be removed and salvaged.

3.2 PREPARATION

A. Refrigerant: Before starting demolition, remove refrigerant from mechanical equipment according to 40 CFR 82 and regulations of authorities having jurisdiction.

3.3 UTILITY SERVICES AND MECHANICAL/ELECTRICAL SYSTEMS

A. Existing Services/Systems to Remain: Maintain services/systems indicated to remain and protect them against damage.

B. Existing Services/Systems to Be Removed, Relocated, or Abandoned: Locate, identify, disconnect, and seal or cap off utility services and mechanical/electrical systems serving areas to be selectively demolished.

1. Owner will arrange to shut off indicated services/systems when requested by Contractor.
2. If services/systems are required to be removed, relocated, or abandoned, provide temporary services/systems that bypass area of selective demolition and that maintain continuity of services/systems to other parts of building.
3. Disconnect, demolish, and remove fire-suppression systems, plumbing, and HVAC systems, equipment, and components indicated on Drawings to be removed.

    a. Piping to Be Removed: Remove portion of piping indicated to be removed and cap or plug remaining piping with same or compatible piping material.
    b. Piping to Be Abandoned in Place: Drain piping and cap or plug piping with same or compatible piping material and leave in place.

c. Equipment to Be Removed: Disconnect and cap services and remove equipment.
d. Equipment to Be Removed and Reinstalled: Disconnect and cap services and remove, clean, and store equipment; when appropriate, reinstall, reconnect, and make equipment operational.
e. Equipment to Be Removed and Salvaged: Disconnect and cap services and remove equipment and deliver to Owner.
f. Ducts to Be Removed: Remove portion of ducts indicated to be removed and plug remaining ducts with same or compatible ductwork material.
g. Ducts to Be Abandoned in Place: Cap or plug ducts with same or compatible ductwork material and leave in place.

3.4 PROTECTION

A. Temporary Protection: Provide temporary barricades and other protection required to prevent injury to people and damage to adjacent buildings and facilities to remain.

B. Temporary Shoring: Design, provide, and maintain shoring, bracing, and structural supports as required to preserve stability and prevent movement, settlement, or collapse of construction and finishes to remain, and to prevent unexpected or uncontrolled movement or collapse of construction being demolished.

C. Remove temporary barricades and protections where hazards no longer exist.

3.5 SELECTIVE DEMOLITION

A. General: Demolish and remove existing construction only to the extent required by new construction and as indicated. Use methods required to complete the Work within limitations of governing regulations and as follows:

1. Neatly cut openings and holes plumb, square, and true to dimensions required. Use cutting methods least likely to damage construction to remain or adjoining construction. Use hand tools or small power tools designed for sawing or grinding, not hammering and chopping. Temporarily cover openings to remain.
2. Cut or drill from the exposed or finished side into concealed surfaces to avoid marring existing finished surfaces.
3. Do not use cutting torches until work area is cleared of flammable materials. At concealed spaces, such as duct and pipe interiors, verify condition and contents of hidden space before starting flame-cutting operations. Maintain portable fire-suppression devices during flame-cutting operations.
4. Maintain fire watch during and for at least <Insert number> hours after flame-cutting operations.
5. Locate selective demolition equipment and remove debris and materials so as not to impose excessive loads on supporting walls, floors, or framing.
6. Dispose of demolished items and materials promptly. Comply with requirements in Section 017419 "Construction Waste Management and Disposal."

B. Site Access and Temporary Controls: Conduct selective demolition and debris-removal operations to ensure minimum interference with roads, streets, walks, walkways, and other adjacent occupied and used facilities.

C. Removed and Salvaged Items:

1. Clean salvaged items.

2. Pack or crate items after cleaning. Identify contents of containers.
3. Store items in a secure area until delivery to Owner.
4. Transport items to Owner's storage area designated by Owner.
5. Protect items from damage during transport and storage.

D. Removed and Reinstalled Items:

1. Clean and repair items to functional condition adequate for intended reuse.
2. Pack or crate items after cleaning and repairing. Identify contents of containers.
3. Protect items from damage during transport and storage.
4. Reinstall items in locations indicated. Comply with installation requirements for new materials and equipment. Provide connections, supports, and miscellaneous materials necessary to make item functional for use indicated.

E. Existing Items to Remain: Protect construction indicated to remain against damage and soiling during selective demolition. When permitted by Architect, items may be removed to a suitable, protected storage location during selective demolition and cleaned and reinstalled in their original locations after selective demolition operations are complete.

3.6 CLEANING

A. Remove demolition waste materials from Project site [and dispose of them in an EPA-approved construction and demolition waste landfill acceptable to authorities having jurisdiction and recycle or dispose of them according to Section 017419 "Construction Waste Management and Disposal."

1. Do not allow demolished materials to accumulate on-site.
2. Remove and transport debris in a manner that will prevent spillage on adjacent surfaces and areas.
3. Remove debris from elevated portions of building by chute, hoist, or other device that will convey debris to grade level in a controlled descent.
4. Comply with requirements specified in Section 017419 "Construction Waste Management and Disposal."

B. Burning: Do not burn demolished materials.

C. Clean adjacent structures and improvements of dust, dirt, and debris caused by selective demolition operations. Return adjacent areas to condition existing before selective demolition operations began.

END OF SECTION **024119**

THIS SHEET INTENTIONALLY LEFT BLANK

SECTION 055000 - METAL FABRICATIONS

PART 1 - GENERAL

1.1 SUMMARY

A. Section Includes:

1. Miscellaneous steel framing and supports.
2. Shelf angles.
3. Metal ladders.
4. Metal floor plate and supports.
5. Miscellaneous steel trim.
6. Loose bearing and leveling plates.

B. Products furnished, but not installed, under this Section include the following:

1. Anchor bolts, steel pipe sleeves, slotted-channel inserts, and wedge-type inserts indicated to be cast into concrete or built into unit masonry.
2. Steel weld plates and angles for casting into concrete.

1.2 ACTION SUBMITTALS

A. Product Data: For the following:

1. Fasteners, anchors and connectors.
2. Shop primers.
3. Miscellaneous steel supports and steel plate.
4. Shrinkage-resisting grout.

B. Sustainable Design Submittals:

1. Environmental Product Declaration: For each product.

C. Shop Drawings: Show fabrication and installation details. Include plans, elevations, sections, and details of metal fabrications and their connections. Show anchorage and accessory items.

D. Delegated-Design Submittal: For roof platforms, including analysis data signed and sealed by the qualified professional engineer, licensed in the state of Louisiana, responsible for their preparation.

PART 2 - PRODUCTS

2.1 PERFORMANCE REQUIREMENTS

A. Delegated Design: Engage a qualified professional engineer, as defined in Section 014000 "Quality Requirements," to design roof platforms.

B. Structural Performance of roof platforms: Platforms, including landings and supports, shall withstand the effects of loads and stresses within limits and under conditions specified in ANSI A14.3 as well as wind uplift resistance specified in the IBC 2015 and stated on the drawings.

2.2 METALS

A. Metal Surfaces, General: Provide materials with smooth, flat surfaces unless otherwise indicated. For metal fabrications exposed to view in the completed Work, provide materials without seam marks, roller marks, rolled trade names, or blemishes.

B. Recycled Content of Steel Products: Postconsumer recycled content plus one-half of preconsumer recycled content not less than 25 percent.

C. Steel Plates, Shapes, and Bars: ASTM A36/A36M.

D. Stainless Steel Bars and Shapes: ASTM A276/A276M, Type 304 Type 316L.

E. Rolled-Steel Floor Plate: ASTM A786/A786M, rolled from plate complying with ASTM A36/A36M or ASTM A283/A283M, Grade C or D.

F. Rolled-Stainless Steel Floor Plate: ASTM A793.

G. Steel Tubing: ASTM A500/A500M, cold-formed steel tubing.

H. Steel Pipe: ASTM A53/A53M, Standard Weight (Schedule 40) unless otherwise indicated.

I. Zinc-Coated Steel Wire Rope: ASTM A741.

1. Wire Rope Fittings: Hot-dip galvanized-steel connectors with capability to sustain, without failure, a load equal to minimum breaking strength of wire rope with which they are used.

J. Stainless Steel Wire Rope: Wire rope manufactured from stainless steel wire complying with ASTM A492, Type 316.

1. Wire Rope Fittings: Stainless steel connectors, Type 316, with capability to sustain, without failure, a load equal to minimum breaking strength of wire rope with which they are used.

K. Steel Prestressing Strand: ASTM A416/A416M, Grade 270, low-relaxation, seven-wire, with 0.9-lb/sq. ft.zinc coating.

1. Steel Prestressing Strand Fittings: Hot-dip galvanized-steel anchors and connectors with capability to sustain, without failure, a load equal to minimum breaking strength of steel prestressing strand with which they are used.

L. Slotted Channel Framing: Cold-formed metal box channels (struts) complying with MFMA-4.

1. Size of Channels: 1-5/8 by 1-5/8 inches Insert size.
2. Material: Galvanized steel, ASTM A653/A653M, commercial steel, Type B structural steel, Grade 33, with G90 coating; 0.108-inch 0.079-inch 0.064-inch nominal thickness.
3. Material: Cold-rolled steel, ASTM A1008/A1008M, commercial steel, Type B structural steel, Grade 33; 0.0966-inch 0.0677-inch 0.0528-inch minimum thickness; unfinished coated with rust-inhibitive, baked-on, acrylic enamel hot-dip galvanized after fabrication.

M. Aluminum Extrusions: ASTM B221, Alloy 6063-T6.

N. Aluminum-Alloy Rolled Tread Plate: ASTM B632/B632M, Alloy 6061-T6.

O. Aluminum Castings: ASTM B26/B26M, Alloy 443.0-F.

P. Bronze Extrusions: ASTM B455, Alloy UNS No. C38500 (extruded architectural bronze).

Q. Bronze Castings: ASTM B584, Alloy UNS No. C83600 (leaded red brass) or UNS No. C84400 (leaded semired brass).

R. Nickel Silver Castings: ASTM B584, Alloy UNS No. C97600 (20 percent leaded nickel bronze).

2.3 FASTENERS

A. General: Unless otherwise indicated, provide Type 304 stainless steel fasteners for exterior use and zinc-plated fasteners with coating complying with ASTM B633 or ASTM F1941/F1941M, Class Fe/Zn 5, at exterior walls. Select fasteners for type, grade, and class required.

1. Provide stainless steel fasteners for fastening aluminum, stainless steel or nickel silver.
2. Provide bronze fasteners for fastening bronze.

B. Cast-in-Place Anchors in Concrete: Either threaded or wedge type unless otherwise indicated; galvanized ferrous castings, either ASTM A47/A47M malleable iron or ASTM A27/A27M cast steel. Provide bolts, washers, and shims as needed, all hot-dip galvanized per ASTM F2329/F2329M.

C. Post-Installed Anchors: Torque-controlled expansion anchors chemical anchors.

1. Material for Interior Locations: Carbon-steel components zinc plated to comply with ASTM B633 or ASTM F1941/F1941M, Class Fe/Zn 5, unless otherwise indicated.
2. Material for Exterior Locations and Where Stainless Steel Is Indicated: Alloy Group 1 Group 2 stainless steel bolts, ASTM F593, and nuts, ASTM F594.

D. Slotted-Channel Inserts: Cold-formed, hot-dip galvanized-steel box channels (struts) complying with MFMA-4, 1-5/8 by 7/8 inches by length indicated with anchor straps or studs not less than 3 inches long at not more than 8 inches o.c. Provide with temporary filler and tee-head bolts, complete with washers and nuts, all zinc-plated to comply with ASTM B633, Class Fe/Zn 5, as needed for fastening to inserts.

2.4 MISCELLANEOUS MATERIALS

A. Universal Shop Primer: Fast-curing, lead- and chromate-free, universal modified-alkyd primer complying with MPI#79 and compatible with topcoat.

1. Use primer containing pigments that make it easily distinguishable from zinc-rich primer.

B. Water-Based Primer: Emulsion type, anticorrosive primer for mildly corrosive environments that is resistant to flash rusting when applied to cleaned steel, complying with MPI#107 and compatible with topcoat.

C. Epoxy Zinc-Rich Primer: Complying with MPI#20 and compatible with topcoat.

D. Shop Primer for Galvanized Steel: Primer formulated for exterior use over zinc-coated metal and compatible with finish paint systems indicated.

E. Galvanizing Repair Paint: High-zinc-dust-content paint complying with SSPC-Paint 20 and compatible with paints specified to be used over it.

F. Bituminous Paint: Cold-applied asphalt emulsion complying with ASTM D1187/D1187M.

G. Shrinkage-Resistant Grout: Factory-packaged, nonmetallic, nonstaining, noncorrosive, nongaseous grout complying with ASTM C1107/C1107M. Provide grout specifically recommended by manufacturer for interior and exterior applications.

H. Concrete: Comply with requirements in Section 033000 "Cast-in-Place Concrete" for normal-weight, air-entrained concrete with a minimum 28-day compressive strength of 3000 psi.

2.5 FABRICATION, GENERAL

A. Shop Assembly: Preassemble items in the shop to greatest extent possible. Disassemble units only as necessary for shipping and handling limitations. Use connections that maintain structural value of joined pieces. Clearly mark units for reassembly and coordinated installation.

B. Cut, drill, and punch metals cleanly and accurately. Remove burrs and ease edges to a radius of approximately 1/32 inch unless otherwise indicated. Remove sharp or rough areas on exposed surfaces.

C. Form bent-metal corners to smallest radius possible without causing grain separation or otherwise impairing work.

D. Form exposed work with accurate angles and surfaces and straight edges.

E. Weld corners and seams continuously to comply with the following:

1. Use materials and methods that minimize distortion and develop strength and corrosion resistance of base metals.
2. Obtain fusion without undercut or overlap.
3. Remove welding flux immediately.
4. At exposed connections, finish exposed welds and surfaces smooth and blended so no roughness shows after finishing[and contour of welded surface matches that of adjacent surface].

F. Form exposed connections with hairline joints, flush and smooth, using concealed fasteners or welds where possible. Where exposed fasteners are required, use Phillips flat-head (countersunk) fasteners unless otherwise indicated. Locate joints where least conspicuous.

G. Fabricate seams and other connections that are exposed to weather in a manner to exclude water. Provide weep holes where water may accumulate.

H. Where units are indicated to be cast into concrete or built into masonry, equip with integrally welded steel strap anchors, not less than 8 inches from ends and corners of units and 24 inches o.c.

2.6 MISCELLANEOUS FRAMING AND SUPPORTS

A. Fabricate units from steel shapes, plates, and bars of welded construction unless otherwise indicated. Fabricate to sizes, shapes, and profiles indicated and as necessary to receive adjacent construction.

B. Fabricate steel pipe columns for supporting construction from steel pipe with steel baseplates and top plates as indicated. Drill or punch baseplates and top plates for anchor and connection bolts and weld to pipe with fillet welds all around. Make welds the same size as pipe wall thickness unless otherwise indicated.

2.7 MISCELLANEOUS STEEL TRIM

A. Unless otherwise indicated, fabricate units from steel shapes, plates, and bars of profiles shown with continuously welded joints and smooth exposed edges. Miter corners and use concealed field splices where possible.

B. Provide cutouts, fittings, and anchorages as needed to coordinate assembly and installation with other work.

C. Galvanize miscellaneous steel trim.

D. Prime miscellaneous steel trim with zinc-rich primer.

2.8 LOOSE BEARING AND LEVELING PLATES

A. Provide loose bearing and leveling plates for steel items bearing on masonry or concrete construction. Drill plates to receive anchor bolts and for grouting.

B. Galvanize bearing and leveling plates.

C. Prime plates with zinc-rich primer.

2.9 STEEL BASE PLATES AND ANGLES

A. Provide steel base plates and angles not specified in other Sections, for items supported on concrete construction as needed to complete the Work.

2.10 GENERAL FINISH REQUIREMENTS

A. Finish metal fabrications after assembly.

2.11 STEEL AND IRON FINISHES

A. Galvanizing: Hot-dip galvanize items as indicated to comply with ASTM A153/A153M for steel and iron hardware and with ASTM A123/A123M for other steel and iron products.

1. Do not quench or apply post galvanizing treatments that might interfere with paint adhesion.

PART 3 - EXECUTION

3.1 INSTALLATION, GENERAL

A. Cutting, Fitting, and Placement: Perform cutting, drilling, and fitting required for installing metal fabrications. Set metal fabrications accurately in location, alignment, and elevation; with edges and surfaces level, plumb, true, and free of rack; and measured from established lines and levels.

B. Fit exposed connections accurately together to form hairline joints. Weld connections that are not to be left as exposed joints but cannot be shop welded because of shipping size limitations. Do not weld, cut, or abrade surfaces of exterior units that have been hot-dip galvanized after fabrication and are for bolted or screwed field connections.

C. Field Welding: Comply with the following requirements:

1. Use materials and methods that minimize distortion and develop strength and corrosion resistance of base metals.
2. Obtain fusion without undercut or overlap.
3. Remove welding flux immediately.
4. At exposed connections, finish exposed welds and surfaces smooth and blended so no roughness shows after finishing and contour of welded surface matches that of adjacent surface.

D. Fastening to In-Place Construction: Provide anchorage devices and fasteners where metal fabrications are required to be fastened to in-place construction. Provide threaded fasteners for use with concrete and masonry inserts, toggle bolts, through bolts, lag screws, wood screws, and other connectors.

E. Provide temporary bracing or anchors in formwork for items that are to be built into concrete, masonry, or similar construction.

3.2 INSTALLATION OF MISCELLANEOUS FRAMING AND SUPPORTS

A. Install framing and supports to comply with requirements of items being supported, including manufacturers' written instructions and requirements indicated on Shop Drawings.

B. Anchor supports for [ceiling hung toilet partitions] [operable partitions] [overhead doors] [and] [overhead grilles] securely to, and rigidly brace from, building structure.

C. Anchor shelf angles securely to existing construction with [expansion anchors] [anchor bolts] [through bolts].

D. Support steel girders on solid grouted masonry, concrete, or steel pipe columns. Secure girders with anchor bolts embedded in grouted masonry or concrete or with bolts through top plates of pipe columns.

3.3 INSTALLATION OF PREFABRICATED BUILDING COLUMNS

A. Install prefabricated building columns to comply with ANSI/AISC 360, "Specifications for Structural Steel Buildings," and with requirements applicable to listing and labeling for fire-resistance rating indicated.

3.4 INSTALLATION OF METAL BOLLARDS

A. Fill metal-capped bollards solidly with concrete and allow concrete to cure seven days before installing.

B. Anchor bollards to existing construction with [expansion anchors] [anchor bolts] [through bolts]. Provide four 3/4-inch bolts at each bollard unless otherwise indicated.

1. Embed anchor bolts at least 4 inches in concrete.

C. Anchor bollards in concrete [with pipe sleeves preset and anchored into concrete] [in formed or core-drilled holes not less than 42 inches deep and 3/4 inch larger than OD of bollard]. Fill annular space around bollard solidly with shrinkage-resistant grout; mixed and placed to comply with grout manufacturer's written instructions. Slope grout up approximately 1/8 inch toward bollard.

D. Anchor bollards in place with concrete footings. Center and align bollards in holes 3 inches above bottom of excavation. Place concrete and vibrate or tamp for consolidation. Support and brace bollards in position until concrete has cured.

E. Fill bollards solidly with concrete, mounding top surface to shed water.

3.5 INSTALLATION OF VEHICULAR BARRIER CABLE SYSTEMS

A. Install vehicular barrier cable systems at locations indicated, mounted at heights indicated on Drawings above the parking surface. Anchor steel prestressing strand to structural columns and walls and tension to withstand vehicle loading as specified in "Performance Requirements" Article with no cable tensioned less than 3000 lbf. Do not displace supporting components.

3.6 INSTALLATION OF BEARING AND LEVELING PLATES

A. Clean concrete and masonry bearing surfaces of bond-reducing materials, and roughen to improve bond to surfaces. Clean bottom surface of plates.

B. Set bearing and leveling plates on wedges, shims, or leveling nuts. After bearing members have been positioned and plumbed, tighten anchor bolts. Do not remove wedges or shims but, if protruding, cut off flush with edge of bearing plate before packing with shrinkage-resistant grout. Pack grout solidly between bearing surfaces and plates to ensure that no voids remain.

3.7 REPAIRS

A. Touchup Painting:

1. Immediately after erection, clean field welds, bolted connections, and abraded areas. Paint uncoated and abraded areas with same material as used for shop painting to comply with SSPC-PA 1 for touching up shop-painted surfaces.

B. Galvanized Surfaces: Clean field welds, bolted connections, and abraded areas and repair galvanizing to comply with ASTM A780/A780M.

END OF SECTION **055000**

THIS SHEET INTENTIONALLY LEFT BLANK

SECTION 070150.19 - PREPARATION FOR REROOFING

PART 1 - GENERAL

1.1 SUMMARY

A. Section Includes:

1. Full tear-off of entire roof system of roof system at areas indicated on Drawings.
2. Partial tear-off of entire roof area indicated on Drawings.
3. Re-cover preparation of entire roof area of roof areas indicated on Drawings.
4. Removal of flashings and counterflashings.

1.2 PREINSTALLATION MEETINGS

A. Preliminary Roofing Conference: Before starting removal Work, conduct conference at Project site.

1.3 INFORMATIONAL SUBMITTALS

A. Photographs or Videotape: Show existing conditions of adjoining construction and site improvements, including exterior and interior finish surfaces, that might be misconstrued as having been damaged by reroofing operations.

1. Submit before Work begins.

1.4 QUALITY ASSURANCE

A. Installer Qualifications: Approved by warrantor of existing roofing system to work on existing roofing.

1.5 FIELD CONDITIONS

A. Existing Roofing System: Based on roof cores performed by the Owner’s consultant the roof system consists of: Built-up coal-tar with rock ballast over waterlogged 6” thick polyiso insulation.

1. GC shall verify all conditions
2. Roof core report is available from the Owner.

B. Owner will occupy portions of building immediately below reroofing area.

1. Conduct reroofing so Owner's operations are not disrupted.
2. Provide Owner with not less than 72 hours' written notice of activities that may affect Owner's operations.

3. Coordinate work activities daily with Owner so Owner has adequate advance notice to place protective dust and water-leakage covers over sensitive equipment and furnishings, shut down HVAC and fire-alarm or -detection equipment if needed, and evacuate occupants from below work area.
4. Before working over structurally impaired areas of deck, notify Owner to evacuate occupants from below affected area.

    a. Verify that occupants below work area have been evacuated before proceeding with work over impaired deck area.

C. Protect building to be reroofed, adjacent buildings, walkways, site improvements, exterior plantings, and landscaping from damage or soiling from reroofing operations.

D. Maintain access to existing walkways, corridors, and other adjacent occupied or used facilities.

E. Conditions existing at time of inspection for bidding will be maintained by Owner as far as practical.

1. The results of test cores from existing roofing system are available for Contractor's reference.

F. Limit construction loads on existing roof areas to remain, and existing roof areas scheduled to be reroofed.

G. Weather Limitations: Proceed with reroofing preparation only when existing and forecasted weather conditions permit Work to proceed without water entering existing roofing system or building.

1. Remove only as much roofing in one day as can be made watertight in the same day.

1.6 WARRANTY

A. Existing Warranties: Remove, replace, patch, and repair materials and surfaces cut or damaged during reroofing, by methods and with materials so as not to void existing warranty.

PART 2 - PRODUCTS

2.1 AUXILIARY REROOFING MATERIALS

A. General: Use auxiliary reroofing preparation materials recommended by roofing system manufacturer for intended use and compatible with components of new roofing system.

PART 3 - EXECUTION

3.1 PREPARATION

A. Seal or isolate windows that may be exposed to airborne substances created in removal of existing materials.

B. Coordinate with the Owner to shut off rooftop utilities and service piping before beginning the Work.

1. Service Provider's roof top antenna arrays and equipment shall be shut down only when workers are in the area around the equipment.

a. Coordinate with Owner and Service Provider to shut down roof top equipment.
b. Coordinate with Owner and Service Provider to provide wearable tags for all workers to detect hazardous radiation exposure.

C. Test existing roof drains to verify that they are not blocked or restricted.

1. Immediately notify Architect of any blockages or restrictions.

D. Coordinate with Owner to shut down air-intake equipment in the vicinity of the Work.

1. Cover air-intake louvers before proceeding with reroofing work that could affect indoor air quality or activate smoke detectors in the ductwork.

E. During removal operations, have sufficient and suitable materials on-site to facilitate rapid installation of temporary protection in the event of unexpected rain.

F. Maintain roof drains in functioning condition to ensure roof drainage at end of each workday.

1. Prevent debris from entering or blocking roof drains and conductors.

a. Use roof-drain plugs specifically designed for this purpose.
b. Remove roof-drain plugs at end of each workday, when no work is taking place, or when rain is forecast.

2. If roof drains are temporarily blocked or unserviceable due to roofing system removal or partial installation of new roofing system, provide alternative drainage method to remove water and eliminate ponding.

a. Do not permit water to enter into building or into or under existing roofing system components that are to remain.

3.2 ROOF TEAR-OFF

A. Notify Owner each day of extent of roof tear-off proposed for that day.

B. Lower removed roofing materials to ground using dust-tight chutes or other acceptable means of removing materials from roof areas.

C. Remove aggregate ballast from roofing.

D. Remove loose aggregate from aggregate-surfaced, built-up bituminous roofing using a power broom.

E. Remove accessories indicated on drawings from roofing.

1. Store and protect accessories indicated for reuse in manner not to exceed structural loading limitations of roof deck.

F. Full Roof Tear-off: Where indicated on Drawings, remove existing roofing and other roofing system components down to the existing roof deck.

1. Remove substrate board, vapor retarder, roof insulation and cover board.
2. Remove base flashings and counter flashings.
3. Remove perimeter edge flashing and gravel stops.
4. Remove copings (**ONLY IF ALTERNATE NO 1 IS ACCEPTED**).
5. Remove expansion-joint covers.
6. Remove flashings at pipes, curbs, mechanical equipment, and other penetrations.
7. Remove roof drains indicated on Drawings to be removed.
8. Remove wood blocking, curbs, and nailers.
9. Remove unadhered bitumen, unadhered felts and wet felts.

    a. Verify with roofing manufacturer if adhered bitumen and felts can remain in place.

10. Remove fasteners from deck or cut fasteners off and grind smooth with deck surface.

3.3 DECK PREPARATION

A. Inspect deck after tear-off of roofing system.

B. If deck surface is unsuitable for receiving new roofing or if structural integrity of deck is suspect, immediately notify Architect.

1. Do not proceed with installation until directed by Architect.

3.4 BASE FLASHING REMOVAL

A. Remove existing base flashings.

1. Clean substrates of contaminants, such as asphalt, sheet materials, dirt, and debris.

B. Do not damage metal counterflashings that are to remain.

1. Replace metal counterflashings damaged during removal with counterflashings of same metal, weight or thickness, and finish as existing.

C. Inspect parapet sheathing, wood blocking, curbs, and nailers for deterioration and damage.

1. If parapet sheathing, wood blocking, curbs, or nailers have deteriorated, immediately notify Architect.

D. Remove existing parapet sheathing and replace with new parapet sheathing **ONLY IF ALTERNATE NO 1 IS ACCEPTED**.

END OF SECTION **070150.19**

SECTION 07 55 00 MODIFIED BITUMEN MEMBRANE ROOFING

PART 1 GENERAL

1.01 SECTION INCLUDES:

A. Preparation of Substrate to Receive Roofing Materials

B. Roof Insulation Application to Prepared Substrate

C. Roof Membrane Application

D. Roof Flashing Application

E. Incorporation of Sheet Metal Flashing Components and Roofing Accessories into the Roof System

1.02 PRODUCTS INSTALLED BUT NOT FURNISHED UNDER THIS SECTION

A. Sheet Metal Flashing and Trim

B. Sheet Metal Roofing Specialties

1.03 RELATED SECTIONS

C. Section 07 62 00 - Sheet Metal Flashing and Trim

1.04 REFERENCE STANDARDS

References in these specifications to standards, test methods and codes, are implied to mean the latest edition of each such standard adopted. The following is an abbreviated list of associations, institutions, and societies which may be used as references throughout these specifications.

ASTM	American Society for Testing and Materials Philadelphia, PA
FM	Factory Mutual Engineering and Research Norwood, MA
NRCA	National Roofing Contractors Association Rosemont, IL
OSHA	Occupational Safety and Health Administration Washington, DC
SMACNA	Sheet Metal and Air Conditioning Contractors National Association Chantilly, VA
UL	Underwriters Laboratories Northbrook, IL

1.05 DESCRIPTION OF WORK

The basic work descriptions required in this specification are referenced below. The **"Basis-of-Design"** are those products manufactured by Siplast, Inc.

A. ROOF SYSTEM:
   a. Deck Type – Structural Concrete, primed with manufacturer's asphalt primer
   b. Provide new 2 Ply SBS Modified Bitumen Membrane over insulation over vapor retarder.
   c. Base Bid - Roof Assembly Components
      i. Polyisocyanurate tapered insulation system and roof cover panel adhered to deck;
      ii. 1 ply of SBS Base Membrane applied in cold adhesive to cover panel;
      iii. 1 ply of SBS Granular Cap Membrane applied in cold adhesive to Base Membrane.
      iv. 1 ply of SBS Base Flashing Membrane, torch applied and PMMA Reinforced Base Flashing Membrane, liquid applied.
   d. Add Alternate Bid No.1 - Roof Assembly Components
   To the items listed under **c. Base Bid Roof Assembly Components** listed above add the following:
      i. 1 ply of SBS Wall Flashing Membrane, torch applied and 1 ply of Foil Faced Wall Flashing Cap Ply Membrane torch applied.
   e. Add Alternate Bid No.2 - Roof Assembly Components
   To the items listed under **c. Base Bid Roof Assembly Components** listed above add the following:
      i. 1 ply of SBS Membrane torch applied to primed deck;

1.06 SUBMITTALS
All submittals which do not conform to the following requirements will be rejected.

A. Submittal of Equals: Submit primary roof systems to be considered as equals to the specified roof system no less than 7 days prior to bid date. Primary roof systems which have been reviewed and accepted as equals to the specified roof system will be listed in an addendum prior to bid date; only then will equals be accepted at bidding. Submittals shall include the following:

   1. Two 3 inch x 5 inch samples of the primary roofing and flashing sheets.

   2. Latest edition of the roofing system manufacturer's specifications and installation instructions.

   3. Evidence that the manufacturer of the proposed roofing system utilizes a quality management system that is ISO 9001:2000 certified. Documentation of ISO 9001:2000 certification of foreign subsidiaries without domestic certification will not be accepted.

   4. Evidence and description of manufacturer's quality control/quality assurance program for the primary roofing products supplied. The quality assurance program description shall include all methods of testing for physical and mechanical property values. Provide confirmation of manufacturer's certificate of analysis for reporting the tested values of the actual material being supplied for the project prior to issuance of the specified guarantee.

   5. Descriptive list of the materials proposed for use.

   6. Evidence of Underwriters' Laboratories Class A acceptance of the proposed roofing system without additional requirements for gravel or coatings. No other testing agency approvals will be accepted.

   7. Evidence of Independent Accredited Testing for the proposed membrane system.

      a) Factory Mutual Approval Standard 4470 listing for the proposed membrane system. The roof membrane configuration shall be approved by FM Global for Class 1-SH (severe hail) exposure. The roof shall be approved by FM Global for minimum 1-540 wind uplift construction.

b) The roof membrane configuration shall be approved by FM for Class 1-SH (severe hail) exposure.

8. Letter from the proposed primary roofing manufacturer confirming that a phased roof application, with only the modified bitumen base ply in place for a period of up to 10 weeks, is acceptable and approved for this project.

9. Complete list of material physical and mechanical properties for each sheet including: weights and thicknesses; low temperature flexibility; peak load; ultimate elongation; dimensional stability; compound stability; high temperature stability; granule embedment and resistance to thermal shock for foil faced products.

B. Submittals Prior to Contract Award:

1. Letter from the proposed primary roofing manufacturer confirming that the bidder is an acceptable Contractor authorized to install the proposed system.

2. Letter from the primary roofing manufacturer stating that the proposed application will comply with the manufacturer's requirements in order to qualify the project for the specified guarantee.

3. Manufacturer's printed recommendations for proper maintenance of the specified roof system including inspection frequencies, penetration addition policies, temporary repairs, and leak call procedures.

1.07 QUALITY ASSURANCE

A. Acceptable Products: Primary roofing products, including each type of sheet, all manufactured in the United States, shall be supplied by a single manufacturer which has been successfully producing the specified types of primary products for not less than 10 years. The primary roofing products shall have maintained a consistent composition for a minimum of five years.

B. Agency Approvals: The proposed roof system shall conform to the following requirements. No other testing agency approvals will be accepted.

1. Underwriters Laboratories Class A acceptance of the proposed roofing system without additional requirements for gravel or coatings.

2. Factory Mutual Approval Standard 4470 listing for the proposed membrane system. The roof membrane configuration shall be approved by FM Global for Class 1-SH (severe hail) exposure. The roof shall be approved by FM Global for minimum 1-540 wind uplift construction.

C. Acceptable Contractor: Contractor shall have a minimum of 2 years experience in successfully installing the same or similar roofing materials and be certified in writing by the roofing materials manufacturer to install the primary roofing products.

D. Scope of Work: The work to be performed under this specification shall include but is not limited to the following: Attend necessary job meetings and furnish competent and full time supervision, experienced roof mechanics, all materials, tools, and equipment necessary to complete, in an acceptable manner, the roof installation in accordance with this specification. Comply with the latest written application instructions of the manufacturer of the primary roofing products. In addition, application practice shall comply with requirements and recommendations contained in the latest edition of the Handbook of Accepted Roofing Knowledge (HARK) as published by the National Roofing Contractor's Association, amended to include the acceptance of a phased roof system installation.

E. Local Regulations: Conform to regulations of public agencies, including any specific requirements of the city and/or state of jurisdiction.

F. Manufacturer Requirements: The roofing materials manufacturer must provide a field technical inspector directly trained by the company to attend necessary job meetings, perform at minimum an inspection at the start of the project, prior to the cap sheet application and conduct a final roof inspection upon successful completion of the project. The inspector is required to provide a field inspection report for any and all job visit during the application of the roofing project. The roofing manufacture shall provide a copy of this report to the contractor and project designer within a week of the date of the inspection.

1.08 PRODUCT DELIVERY STORAGE AND HANDLING

A. Delivery: Deliver materials in the manufacturer's original sealed and labeled containers and in quantities required to allow continuity of application.

B. Storage: Store materials out of direct exposure to the elements. Store roll goods on a clean, flat and dry surface. All material stored on the roof overnight shall be stored on pallets. Rolls of roofing must be stored on ends. Store materials on the roof in a manner so as to preclude overloading of deck and building structure. Store materials such as solvents, adhesives and asphalt cutback products away from open flames, sparks or excessive heat. Cover all material using a breathable cover such as a canvas. Polyethylene or other non-breathable plastic coverings are not acceptable.

C. Handling: Handle all materials in such a manner as to preclude damage and contamination with moisture or foreign matter. Handle rolled goods to prevent damage to edges or ends.

D. Damaged Material: Any materials that are found to be damaged or stored in any manner other than stated above will be automatically rejected, removed and replaced at the Contractor's expense.

1.09 PROJECT/SITE CONDITIONS

A. Requirements Prior to Job Start

1. Notification: Give a minimum of 5 days notice to the Owner and manufacturer prior to commencing any work and notify both parties on a daily basis of any change in work schedule.

2. Permits: Obtain all permits required by local agencies and pay all fees which may be required for the performance of the work.

3. Safety: Familiarize every member of the application crew with all fire and safety regulations recommended by OSHA, NRCA and other industry or local governmental groups.

B. Environmental Requirements

1. Precipitation: Do not apply roofing materials during precipitation or in the event there is a probability of precipitation during application. Take adequate precautions to ensure that materials, applied roofing, and building interiors are protected from possible moisture damage or contamination.

2. Temperature Restrictions - cold adhesive: At low temperatures, the specified cold adhesive becomes more viscous, making even distribution more difficult. The optimal temperature of the adhesive at point of application is 70° - 100°F (21° - 38°C). To facilitate application when ambient temperatures are below 50□F (10□C), store the adhesive and roll goods in a warm place immediately prior to use. Bulk warmers, inline heaters, or other pre-heating equipment should be used to maintain the proper viscosity of the adhesive when using mechanical application equipment. Consider "flying in" the pre-cut roofing sheets in by placing them into the adhesive

rather than rolling them into position. Roll or broom the sheets to ensure contact with the underlying adhesive. Suspend application in situations where the adhesive cannot be kept at temperatures allowing for even distribution.

C. Protection Requirements

1. Membrane Protection: Provide protection against staining and mechanical damage for newly applied roofing and adjacent surfaces throughout this project.

2. Limited Access: Prevent access by the public to materials, tools and equipment during the course of the project.

3. Debris Removal: Remove all debris daily from the project site and take to a legal dumping area authorized to receive such materials.

4. Site Condition: Complete, to the owner's satisfaction, all job site clean-up including building interior, exterior and landscaping where affected by the construction.

1.10 GUARANTEE/WARRANTY

A. Roof Membrane/System Guarantee: Upon successful completion of the project, and after all post installation procedures have been completed, furnish the Owner with the the State of Louisiana 20-yr Guarantee covering the rigid insulation, insulation fasteners/plates, roof membrane/flashing system. The guarantee shall be a term type, without deductibles or limitations on coverage amount, and shall be issued at no additional cost to the Owner.

1. 20 year State of Louisiana Guarantee, see guarantee at the end of this Section.

PART 2 PRODUCTS

2.01 ROOFING SYSTEM ASSEMBLY/PRODUCTS

A. Vapor Retarder (**Alternate Bid No.2**)

1. Modified Bitument Membrane:

Firetsone SBS Smooth (140 mils/3.6 mm thick; weight 90 lbs. per square; with non-woven polyester mat with continuous glass fiber yarn).

Irex 40 (110 mils/2.8 mm thick; weight 85 lbs. per square; with fiberglass mat).

Duraflex 190 S (120 mils/3.0 mm thick; weight 88 lbs. per square; with non-woven polyester mat).

B. Rigid Roof Insulation: (**Base Bid**)
Roof insulation shall be UL and FM approved. Insulation shall be approved in writing by the insulation manufacturer for intended use and for use with the specified roof assembly.

1. Polyisocyanurate Tapered Roof Insulation: Tapered panels and standard fill panels composed of a closed cell, rigid polyisocyanurate foam core material, integrally laminated between glass fiber facers, in full compliance with ASTM C 1289, Type II, Class 1, Grade 2. The tapered system shall provide for a roof slope of 1/8 inch per foot, and an average Thermal Value of R-20. Acceptable types are as follows:
   a. Polyisocyanurate supplied by the roofing membrane manufacturer.

2. Polyisocyanurate Tapered Cricket Insulation: Tapered panels and standard fill panels composed of a closed cell, rigid polyisocyanurate foam core material, integrally laminated between glass fiber facers, in full compliance with ASTM C 1289, Type II, Class 1, Grade 2. The crickets shall be constructed to provide positive drainage double the slope of the existing structure. Locate cricket on the backside of all equipment curbs locaed on the roof. Acceptable types are as follows:
    a. Polyisocyanurate supplied by the roofing membrane manufacturer.

3. Cover Panel: A panel composed of a gypsum based, non-structural water resistant core material integrally bonded with fiberglass mats on both sides having a nominal thickness of 1/2 inch. The panel surface shall be factory primed with a non-asphaltic primer. Supplied by the roofing manufacturer. Acceptable types are as follows:
    a. DensDeck Prime Gypsum Roof Board by Georgia Pacific Corp
    b. Securock Gypsum Roof Panel by US Gypsum Corp
    c. DEXcell Gypsum Roof Panel by National Gypsums Corp

5. Perlite Tapered Edge Panels: A tapered panel composed of expanded volcanic minerals combined with waterproofing binders. The top surface shall be pre-treated with an asphalt based coating. The panels shall have a dimension sufficient to provide for a smooth transition and provide proper support for the membrane layer or subsequent layer of insulation when there are transitions of 1/4 inch or greater.

2.02 DESCRIPTION OF SYSTEMS

A. Roof Field Membranes: (**Base Bid**)

1. Modified Bitumen Base Ply

    Firestone SBS Smooth (140 mils/3.6 mm thick; weight 90 lbs. per square; with non-woven polyester mat with continuous glass fiber yarn).

    Paradiene 20 EG (118 mils/3.0 mm thick; weight 84 lbs. per square; with fiberglass scrim/fiberglass mat).

    Duraflex 190S (120 mils/3.0 mm thick; weight 88 lbs. per square; with non-woven polyester mat).

2. Modified Bitumen Finish Ply

    Firestone SBS FR (115 mils/2.92 mm thick; weight 91 lbs. per square; with non-woven polyester mat with continuous glass fiber yarn).

    Paradiene 30 FR (130 mils/3.3 mm thick; weight 90 lbs. per square; with fiberglass mat).

    Duraflex 190 FR Cap (170 mils/4.3 mm thick; weight 105 obs. Per square; non-woven polyester mat).

B. Base Flashing Assembly: (**Base Bid**)

1. Modified Bitumen Reinforcing and Stripping Ply

    Firestone SBS Smooth (140 mils/3.6 mm thick; weight 90 lbs. per square; with non-woven polyester mat with continuous glass fiber yarn).

    Pro Base TG (114 mils/2.9 mm thick, weight 73 lbs. per square; with fiberglass mat).

    Duraflex 190S (120 mils/3.0 mm thick; weight 88 lbs. per square; with non-woven polyester mat).

2. PMMA Resin for Flashing (Finish Color Light Gray or White):
   Firestone AC Fast FR Resin (40 mils/ 1.02 mm thick)

   Parapro Flashing Resin (90 mils / 2.3 mm thick; weight 68.3 lbs. per square)

   USP Ply Fast (physical properties not reported)

3. Fleece for Flashing Reinforcement: A non-woven, 110 g/m², needle-punched polyester fabric reinforcement as supplied by the membrane system manufacturer.

C. Wall Flashing Membranes: (**Alternate Bid No.1**)

1. Modified Backer Sheet

   Firestone SBS Smooth (140 mils/3.6 mm thick; weight 90 lbs. per square; with non-woven polyester mat with continuous glass fiber yarn).

   Irex 40 (110 mils/2.8 mm thick; weight 85 lbs. per square; with fiberglass mat).

   Duraflex 190S (120 mils/3.0 mm thick; weight 88 lbs. per square; with non-woven polyester mat).

2. Modified Bitumen Foil Faced Flashing Sheet

   Firestone SBS Metal Flash-AL (150 mils/3.8 mm thick; weight 95 lbs. per square; with non-woven polyester mat with continuous glass fiber yarn).

   Veral Aluminium (150 mils/3.8 mm thick; weight 96 lbs. per square; with fiberglass scrim/fiberglass mat composite).

   Duraflex Aluminum SBS (140 mils/3.5 mm thick; weight 103 lbs. Per square; non-woven polyester mat).

2.03 ROOFING COMPONENTS AND ACCESSORIES

A. Roofing Membrane Adhesive

1. Firestone MB Cold Adhesive
2. PA-311 R Adhesive
3. 901 Premium Modified Bitumen Adhesive

B. Bituminous Cutback Materials

1. Primer: An asphalt, solvent blend conforming to ASTM D 41 requirements.

2. Mastics: An asphalt cutback mastic, reinforced with non-asbestos fibers, used as a base for setting metal flanges conforming to ASTM D 4586 Type II requirements.

C. Sealant: A moisture-curing, non-slump elastomeric sealant designed for roofing applications where horizontial slopes are less than ¼-inch per foot. The sealant shall be approved by the roof membrane manufacturer for use in conjunction with the roof membrane materials.

D. Sealant: A moisture-curing, non-slump elastomeric sealant designed for roofing applications where horizontial slopes exceed ¼-inch per foot. The sealant shall be approved by the roof membrane

manufacturer for use in conjunction with the roof membrane materials and/or for setting extruded anchor bar flanges. Acceptable types are as follows:

E. Ceramic Granules: No. 11 grade specification ceramic granules of color scheme matching the granule surfacing of the finish ply.

F. Insulation Adhesives

1. Insulation Adhesive: A single component, moisture cured, polyurethane foam adhesive, dispensed from a portable, pre-pressurized container used to adhere insulation panels to the substrate, as well as to other insulation panels.

    a. Insulation Adhesive supplied by the roofing membrane manufacturer.

2. Insulation Adhesive: A dual component, polyurethane foam adhesive used to adhere insulation panels to the substrate, as well as to other insulation panels.

    b. Insulation Adhesive supplied by the roofing membrane manufacturer.

PART 3 EXECUTION

3.01 PREPARATION

A. General: Sweep or vacuum all surfaces, removing all loose aggregate and foreign substances prior to commencement of roofing.

3.02 SUBSTRATE PREPARATION

A. Insulation: Install insulation panels with end joints offset; edges of the panels shall be in moderate contact without forcing applied in strict accordance with the insulation manufacturer's requirements and the following instructions. Where insulation is installed in two or more layers, stagger joints between layers.

1. Insulation - multiple layer: Install all layers in an application of the manufacturer’s supplied insulation adhesive in 3/4- to 1-inch wide beads spaced 12 inches on center in the field of the roof, 6 inches on center at the perimeter of the roof, and 4 inches on center in the corners of the roof. Panels may be affected by post-growth of the insulation adhesive. Continuous walking in of the panels is recommended particularly in perimeter/corner areas with reduced bead spacing. Follow the requirements and guidelines of the insulation adhesive manufacturer/supplier. Stagger the panel joints between insulation layers.

2. Crickets: Construct crickets of tapered insulation panels in a layout as indicated on the roof plan.

3. Tapered Edge at Transitions: Field-cut, shape and install tapered edge strip at transitions of 1/4 inch or greater between substrate components to provide a smooth transition and proper support for the subsequent insulation layer or membrane/flashing system components.

3.03 ROOF MEMBRANE INSTALLATION

A. Membrane Application: Apply roofing in accordance with roofing system manufacturer's instructions and the following requirements. Application of roofing membrane components shall immediately follow application of base sheet and/or insulation as a continuous operation.

B. Aesthetic Considerations: An aesthetically pleasing overall appearance of the finished roof application is a standard requirement for this project. Make necessary preparations, utilize

recommended application techniques, apply the specified materials including granules, and exercise care in ensuring that the finished application is acceptable to the Owner.

C. Priming: Prime metal and concrete and masonry surfaces with a uniform coating of the specified asphalt primer.

D. Bitumen Consistency: Cutting or alterations of bitumen, primer, and sealants will not be permitted.

E. Roofing Application: Apply all layers of roofing free of wrinkles, creases or fishmouths. Exert sufficient pressure on the roll during application to ensure prevention of air pockets.

1. Apply all layers of roofing perpendicular to the slope of the deck.

2. Fully bond the base ply to the prepared substrate, utilizing minimum 3 inch side and end laps. Apply each sheet directly behind the adhesive applicator. Cut a dog ear angle at the end laps on overlapping selvage edges. Using a clean trowel, apply top pressure to top seal T-laps immediately following sheet application. Stagger end laps a minimum of 3 feet.

3. Fully bond the finish ply to the base ply, utilizing minimum 3 inch side and end laps. Apply each sheet directly behind the adhesive applicator. Stagger end laps of the finish ply a minimum 3 feet. Cut a dog ear angle at the end laps on overlapping selvage edges. Using a clean trowel, apply top pressure to top seal T-laps immediately following sheet application. Stagger side laps of the finish ply a minimum 12 inches from side laps in the underlying base ply. Stagger end laps of the finish ply a minimum 3 feet from end laps in the underlying base ply.

4. Contact the manufacturer of the heat-welding equipment for specific guidelines on operating the equipment. Apply the adhesive in a full coating, extending completely up to the selvage edge of the adjacent course of roof membrane to be overlapped, taking care to keep the adhesive off of the selvage lap that will be heat welded. Place a straight 2"x6" or larger board adjacent to the modified bitumen sheet overlap to help reduce lifting of the overlapping sheet beyond the selvage area, inhibiting the potential for entrapped air during heat welding. Lay the board such that the hand held welder nozzle does not extend into the overlap beyond the specified lap width. Hand-roll the side laps, head laps, and T-laps of the membrane behind the heat welder.

F. Torch-applied Flashing Application (foil-surfaced): Cut the cant backing sheet into 12 inch widths and peel the release film from the back of the sheet. Set the sheet into place over the primed substrate extending 6 inches onto the field of the roof area and 6 inches up the vertical surface utilizing minimum 3 inch laps. Set the non-combustible cant into place dry prior to installation of the roof membrane base ply. Flash walls and curbs using the reinforcing sheet and the metal foil flashing membrane. After the base ply has been applied to the top of the cant, prime the base ply surfaces to receive the reinforcing sheet. Fully adhere the reinforcing sheet, utilizing minimum 3 inch side laps onto the primed base ply surface and up the primed wall or curb to the desired flashing height. After the final roofing ply has been applied to the top of the cant, prepare the surface area that is to receive flashing coverage by torch heating granular surfaces or by application of asphalt primer; allowing primer to dry thoroughly. Torch apply the metal foil-faced flashing into place using three foot widths (cut off the end of roll) always lapping the factory selvage edge. Stagger the laps of the metal foil flashing layer from lap seams in the reinforcing layer. Extend the flashing sheet a minimum of 4 inches beyond the toe of the cant onto the prepared surface of the finished roof and up the wall or curb to the desired flashing height. Exert pressure on the flashing sheet during application to ensure complete contact with the vertical/horizontal surfaces, preventing air pockets; this can be accomplished by using a damp sponge or shop rag. Check and seal all loose laps and edges. Nail the top edge of the flashing on 9 inch centers. (See manufacturer's schematic for visual interpretation).

G. Granule Embedment: Broadcast mineral granules over all bitumen overruns on the finish ply surface, while the adhesive is still soft, to ensure a monolithic surface color.

H. Catalyzed Acrylic Resin Flashing System: Install the liquid-applied primer and flashing system in accordance with the membrane system manufacturer's printed installer's guidelines and other applicable written recommendations as provided by the manufacturer.

I. Water Cut-Off: At end of day's work, or when precipitation is imminent, construct a water cut-off at all open edges. Cut-offs can be built using asphalt or plastic cement and roofing felts, constructed to withstand protracted periods of service. Cut-offs must be completely removed prior to the resumption of roofing.

3.04 ROOF SYSTEM INTERFACE WITH RELATED COMPONENTS

A. Edge Metal: Completely prime metal flanges and allow to dry prior to installation. Turn the base ply down 2 inches past the roof edge and over the nailer. After the base ply and continuous cleat (if applicable) have been installed, set the flange in mastic and stagger nail every 3 inches on center. Strip-in the flange using the stripping-ply material, extending a minimum of 4 inches beyond the edge of the flange. Terminate the finish ply at the gravel-stop rise of the edge metal. SEE ITEM: SEALANT, for finish of this detail.

B. Lead Pipe Flashings: Completely prime the lead flanges and allow to dry prior to installation. After the base ply has been applied, set the flange in mastic and strip-in the flange using the stripping-ply material, extending a minimum of 4 inches beyond the edge of the flange. Terminate the finish ply at the flange-sleeve juncture of the pipe flashing. SEE ITEM: SEALANT for finish of this detail.

C. Roof Drains: Set 30-by-30-inch metal flashing in bed of asphalt roofing cement on completed roofing membrane. Cover metal flashing with roofing membrane cap-sheet stripping and extend a minimum of 4 inches beyond edge of metal flashing onto field of roofing membrane. Clamp roofing membrane, metal flashing, and stripping into roof-drain clamping ring.

   a. Install stripping according to roofing system manufacturer's written instructions.

D. Sealant: Apply a smooth continuous bead of the specified sealant at the exposed finish ply edge transition to metal flashings incorporated into the roof system.

3.05 FIELD QUALITY CONTROL AND INSPECTIONS

A. Site Condition: Leave all areas around job site free of debris, roofing materials, equipment and related items after completion of job.

B. Notification Of Completion: Notify the manufacturer by means of manufacturer's printed Notification of Completion form of job completion in order to schedule a final inspection date.

C. Final Inspection

   1. Post-Installation Meeting: Hold a meeting at the completion of the project, attended by all parties that were present at the pre-job conference. A punch list of items required for completion shall be compiled by the Contractor and the manufacturer's representative. Complete, sign, and mail the punch list form to the manufacturer's headquarters.

D. Issuance Of The Guarantee: Complete all post installation procedures and meet the manufacturer's final endorsement for issuance of the specified guarantee.

END OF SECTION **075500**

SECTION 076200 - SHEET METAL FLASHING AND TRIM

PART 1 - GENERAL

1.1 SUMMARY

A. Section Includes:

1. Manufactured counterflashing.
2. Formed roof-drainage sheet metal fabrications.
3. Formed low-slope roof sheet metal fabrications.
4. Formed wall sheet metal fabrications.

1.2 PREINSTALLATION MEETINGS

A. Preinstallation Conference: Conduct conference at Project site.

1. Review construction schedule. Verify availability of materials, Installer's personnel, equipment, and facilities needed to make progress and avoid delays.
2. Review special roof details, roof drainage, roof-penetration flashing, equipment curbs and condition of other construction that affects sheet metal flashing and trim.
3. Review requirements for insurance and certificates if applicable.
4. Review sheet metal flashing observation and repair procedures after flashing installation.

1.3 ACTION SUBMITTALS

A. Product Data: For each of the following

1. Underlayment materials.
2. Elastomeric sealant.
3. Butyl sealant.
4. Epoxy seam sealer.

B. Shop Drawings: For sheet metal flashing and trim.

1. Include plans, elevations, sections, and attachment details.
2. Detail fabrication and installation layouts, expansion-joint locations, and keyed details. Distinguish between shop- and field-assembled Work.
3. Include identification of material, thickness, weight, and finish for each item and location in Project.
4. Include details for forming, including profiles, shapes, seams, and dimensions.
5. Include details for joining, supporting, and securing, including layout and spacing of fasteners, cleats, clips, and other attachments. Include pattern of seams.
6. Include details of termination points and assemblies.
7. Include details of expansion joints and expansion-joint covers, including showing direction of expansion and contraction from fixed points.
8. Include details of roof-penetration flashing.
9. Include details of edge conditions, including eaves, ridges, valleys, rakes, crickets, flashings, and counterflashings.
10. Include details of special conditions.

11. Include details of connections to adjoining work.

C. Samples: For each exposed product and for each color and texture specified, 12 inches long by actual width.

1.4 INFORMATIONAL SUBMITTALS

A. Sample warranty.

1.5 CLOSEOUT SUBMITTALS

A. Maintenance data.

B. Special warranty.

1.6 QUALITY ASSURANCE

A. Fabricator Qualifications: Employs skilled workers who custom fabricate sheet metal flashing and trim similar to that required for this Project and whose products have a record of successful in-service performance.

1.7 WARRANTY

A. Special Warranty on Finishes: Manufacturer agrees to repair finish or replace sheet metal flashing and trim that shows evidence of deterioration of factory-applied finishes within specified warranty period.

1. Exposed Panel Finish: Deterioration includes, but is not limited to, the following:

   a. Color fading more than 5 Delta E units when tested in accordance with ASTM D2244.
   b. Chalking in excess of a No. 8 rating when tested in accordance with ASTM D4214.
   c. Cracking, checking, peeling, or failure of paint to adhere to bare metal.

2. Finish Warranty Period: 20 years from date of Substantial Completion.

PART 2 - PRODUCTS

2.1 PERFORMANCE REQUIREMENTS

A. Sheet metal flashing and trim assemblies, including cleats, anchors, and fasteners, shall withstand wind loads, structural movement, thermally induced movement, and exposure to weather without failure due to defective manufacture, fabrication, installation, or other defects in construction. Completed sheet metal flashing and trim shall not rattle, leak, or loosen, and shall remain watertight.

B. Sheet Metal Standard for Flashing and Trim: Comply with NRCA's "The NRCA Roofing Manual: Architectural Metal Flashing, Condensation and Air Leakage Control, and Reroofing" and SMACNA's "Architectural Sheet Metal Manual" requirements for dimensions and profiles shown unless more stringent requirements are indicated.

C. SPRI Wind Design Standard: Manufacture and install copings tested in accordance with ANSI/SPRI/FM 4435/ES-1 and capable of resisting the following design pressure:

1. Design Pressure: As indicated on Drawings.

D. FM Approvals Listing: Manufacture and install copings that are listed in FM Approvals' "RoofNav" and approved for windstorm classification, Class 1-120. Identify materials with name of fabricator and design approved by FM Approvals.

E. Thermal Movements: Allow for thermal movements from ambient and surface temperature changes to prevent buckling, opening of joints, overstressing of components, failure of joint sealants, failure of connections, and other detrimental effects. Base calculations on surface temperatures of materials due to both solar heat gain and nighttime-sky heat loss.

2.2 SHEET METALS

A. Protect mechanical and other finishes on exposed surfaces from damage by applying strippable, temporary protective film before shipping.

B. Aluminum Sheet: ASTM B209, alloy as standard with manufacturer for finish required, with temper as required to suit forming operations and performance required; with smooth, flat embossed surface.

1. As-Milled Finish: Exposed coil coated.
2. Color: As selected by Architect from manufacturer's full range Insert color.
3. Concealed Finish: Pretreat with manufacturer's standard white or light-colored acrylic or polyester backer finish, consisting of prime coat and wash coat with minimum total dry film thickness of 0.5 mil.

C. Stainless Steel Sheet: ASTM A240/A240M, Type 304, dead soft, fully annealed; with smooth, flat embossed surface.

1. Finish: ASTM A480/A480M, No. 2D (dull, cold rolled).

D. Metallic-Coated Steel Sheet: Provide zinc-coated (galvanized) steel sheet in accordance with ASTM A653/A653M, G90 coating designation.

1. Surface: Flat Embossed.
2. Color: As selected by Architect from manufacturer's full range.
3. Concealed Finish: Pretreat with manufacturer's standard white or light-colored acrylic or polyester backer finish, consisting of prime coat and wash coat with minimum total dry film thickness of 0.5 mil.

2.3 UNDERLAYMENT MATERIALS

A. Felt: ASTM D226/D226M, Type II (No. 30), asphalt-saturated organic felt; nonperforated.

B. Self-Adhering, High-Temperature Sheet Underlayment: Minimum 30 mils thick, consisting of a slip-resistant polyethylene- or polypropylene-film top surface laminated to a layer of butyl- or SBS-modified asphalt adhesive, with release-paper backing; specifically designed to withstand high metal temperatures beneath metal roofing. Provide primer in accordance with underlayment manufacturer's written instructions.

1. Manufacturers: Subject to compliance with requirements, provide products by one of the following:

   a. Siplast.
   b. GCP Applied Technologies Inc.
   c. Henry Company.
   d. Metal-Fab Manufacturing, a Drexel Metals Company.
   e. Owens Corning.
   f. Protecto Wrap Company.
   g. SDP Advanced Polymer Products Inc.

2. Low-Temperature Flexibility: ASTM D1970/D1970M; passes after testing at minus 20 deg F or lower.

C. Slip Sheet: Rosin-sized building paper, 3 lb/100 sq. ft. minimum.

2.4 MISCELLANEOUS MATERIALS

A. Provide materials and types of fasteners, solder, protective coatings, sealants, and other miscellaneous items as required for complete sheet metal flashing and trim installation and as recommended by manufacturer of primary sheet metal or manufactured item unless otherwise indicated.

B. Fasteners: Wood screws, annular threaded nails, self-tapping screws, self-locking rivets and bolts, and other suitable fasteners designed to withstand design loads and recommended by manufacturer of primary sheet metal or manufactured item.

1. General: Blind fasteners or self-drilling screws, gasketed, with hex-washer head.

   a. Exposed Fasteners: Heads matching color of sheet metal using plastic caps or factory-applied coating. Provide metal-backed EPDM or PVC sealing washers under heads of exposed fasteners bearing on weather side of metal.
   b. Blind Fasteners: High-strength aluminum or stainless steel rivets suitable for metal being fastened.
2. Fasteners for Aluminum Sheet: Aluminum or Series 300 stainless steel.
3. Fasteners for Stainless Steel Sheet: Series 300 stainless steel.
4. Fasteners for Zinc-Coated (Galvanized) Steel Sheet: Series 300 stainless steel or hot-dip galvanized steel in accordance with ASTM A153/A153M or ASTM F2329.

C. Solder:
1. For Stainless Steel: ASTM B32, Grade Sn60 Grade Sn96, with acid flux of type recommended by stainless steel sheet manufacturer.
2. For Zinc-Coated (Galvanized) Steel: ASTM B32, Grade Sn50, 50 percent tin and 50 percent lead or Grade Sn60, 60 percent tin and 40 percent lead with maximum lead content of 0.2 percent.

D. Sealant Tape: Pressure-sensitive, 100 percent solids, polyisobutylene compound sealant tape with release-paper backing. Provide permanently elastic, nonsag, nontoxic, nonstaining tape 1/2 inch wide and 1/8 inch thick.

E. Elastomeric Sealant: ASTM C920, elastomeric polyurethane polysulfide silicone polymer sealant; of type, grade, class, and use classifications required to seal joints in sheet metal flashing and trim and remain watertight.

F. Butyl Sealant: ASTM C1311, single-component, solvent-release butyl rubber sealant; polyisobutylene plasticized; heavy bodied for hooked-type expansion joints with limited movement.

G. Bituminous Coating: Cold-applied asphalt emulsion in accordance with ASTM D1187/D1187M.

H. Asphalt Roofing Cement: ASTM D4586, asbestos free, of consistency required for application.

I. Reglets: Units of type, material, and profile required, formed to provide secure interlocking of separate reglet and counterflashing pieces, and compatible with flashing indicated with factory-mitered and -welded corners and junctions with interlocking counterflashing on exterior face, of same metal as reglet.

1. Manufacturers: Subject to compliance with requirements, provide products by one of the following:

   a. Cheney Flashing Company.
   b. Fry Reglet Corporation.
   c. Heckmann Building Products, Inc.
   d. Hickman Company, W. P.
   e. Hohmann & Barnard, Inc.
   f. Keystone Flashing Company, Inc.
   g. National Sheet Metal Systems, Inc.
   h. Insert manufacturer's name.

2. Material: Stainless steel, 0.0188 inch thick Copper, 16 oz./sq. ft. Aluminum, 0.024 inch thick Galvanized steel, 0.022 inch thick.
3. Surface-Mounted Type: Provide with slotted holes for fastening to substrate, with neoprene or other suitable weatherproofing washers, and with channel for sealant at top edge.
4. Accessories:

   a. Flexible-Flashing Retainer: Provide resilient plastic or rubber accessory to secure flexible flashing in reglet where clearance does not permit use of standard metal counterflashing or where Drawings show reglet without metal counterflashing.
   b. Counterflashing Wind-Restraint Clips: Provide clips to be installed before counterflashing to prevent wind uplift of counterflashing's lower edge.

5. Finish: Mill With manufacturer's standard color coating Insert finish.

2.5 FABRICATION, GENERAL

A. Custom fabricate sheet metal flashing and trim to comply with details indicated and recommendations in cited sheet metal standard that apply to design, dimensions, geometry, metal thickness, and other characteristics of item required.

1. Fabricate sheet metal flashing and trim in shop to greatest extent possible.
2. Fabricate sheet metal flashing and trim in thickness or weight needed to comply with performance requirements, but not less than that specified for each application and metal.
3. Verify shapes and dimensions of surfaces to be covered and obtain field measurements for accurate fit before shop fabrication.
4. Form sheet metal flashing and trim to fit substrates without excessive oil-canning, buckling, and tool marks; true to line, levels, and slopes; and with exposed edges folded back to form hems.
5. Conceal fasteners and expansion provisions where possible. Do not use exposed fasteners on faces exposed to view.

B. Fabrication Tolerances:

1. Fabricate sheet metal flashing and trim that is capable of installation to a tolerance of 1/4 inch in 20 feet on slope and location lines indicated on Drawings and within 1/8-inch offset of adjoining faces and of alignment of matching profiles.
2. Fabricate sheet metal flashing and trim that is capable of installation to tolerances specified.

C. Expansion Provisions: Form metal for thermal expansion of exposed flashing and trim.

1. Form expansion joints of intermeshing hooked flanges, not less than 1 inch deep, filled with butyl sealant concealed within joints.
2. Use lapped expansion joints only where indicated on Drawings.

D. Sealant Joints: Where movable, nonexpansion-type joints are required, form metal in accordance with cited sheet metal standard to provide for proper installation of elastomeric sealant.

E. Fabricate cleats and attachment devices from same material as accessory being anchored or from compatible, noncorrosive metal.

F. Fabricate cleats and attachment devices of sizes as recommended by cited sheet metal standard and by FM Global Property Loss Prevention Data Sheet 1-49 for application, but not less than thickness of metal being secured.

G. Seams: Depending on material -

1. Fabricate nonmoving seams with flat-lock seams. Tin edges to be seamed, form seams, and solder.
2. Fabricate nonmoving seams with flat-lock seams. Form seams and seal with elastomeric sealant unless otherwise recommended by sealant manufacturer for intended use. Rivet joints where necessary for strength.
3. Seams for Aluminum: Fabricate nonmoving seams with flat-lock seams. Form seams and seal with epoxy seam sealer. Rivet joints where necessary for strength.

2.6 ROOF-DRAINAGE SHEET METAL FABRICATIONS

A. Parapet Scuppers: Fabricate scuppers to dimensions required, with closure flange trim to exterior, 4-inch- wide wall flanges to interior, and base extending 4 inches beyond cant or tapered strip into field of roof. Fabricate from the following materials:

1. Aluminum: 0.032 inch.

2. Stainless Steel: 0.0188 inch.
3. Galvanized Steel: 0.028 inch.

2.7 LOW-SLOPE ROOF SHEET METAL FABRICATIONS

A. Copings: Fabricate in minimum 96-inch- long, but not exceeding 12-foot- long, sections. Fabricate joint plates of same thickness as copings. Furnish with continuous cleats to support edge of external leg and drill elongated holes for fasteners on interior leg. Miter corners, fasten and seal solder or weld watertight. Shop fabricate interior and exterior corners.

1. Fabricate from the following materials:
   a. Aluminum: 0.050 inch.
   b. Stainless Steel: 0.0250 inch.
   c. Galvanized Steel: 0.040 inch.

B. Counterflashing: Shop fabricate interior and exterior corners. Fabricate from the following materials:

1. Aluminum: 0.032 inch.
2. Stainless Steel: 0.0188 inch.
3. Galvanized Steel: 0.022 inch.

C. Roof-Penetration Flashing: Fabricate from the following materials:

1. Stainless Steel: 0.0188 inch.
2. Galvanized Steel: 0.028 inch.
3. Lead: 4 lb weight.

D. Roof-Drain Flashing: Fabricate from the following materials:

1. Stainless Steel: 0.0156 inch.
2. Lead: 4 lb. weight

PART 3 - EXECUTION

3.1 INSTALLATION OF UNDERLAYMENT

A. Felt Underlayment: Install felt underlayment, wrinkle free, using adhesive to minimize use of mechanical fasteners under sheet metal flashing and trim.

1. Install in shingle fashion to shed water.
2. Lap joints not less than 2 inches.
3. Lap horizontal joints not less than 4 inches.
4. Lap end joints not less than 12 inches.

B. Self-Adhering, High-Temperature Sheet Underlayment:

1. Install self-adhering, high-temperature sheet underlayment; wrinkle free.
2. Prime substrate if recommended by underlayment manufacturer.
3. Comply with temperature restrictions of underlayment manufacturer for installation; use primer for installing underlayment at low temperatures.

4. Apply in shingle fashion to shed water, with end laps of not less than 6 inches staggered 24 inches between courses.
5. Overlap side edges not less than 3-1/2 inches. Roll laps and edges with roller.
6. Roll laps and edges with roller.
7. Cover underlayment within 14 days.

3.2 INSTALLATION, GENERAL

A. Install sheet metal flashing and trim to comply with details indicated and recommendations of cited sheet metal standard that apply to installation characteristics required unless otherwise indicated on Drawings.

1. Install fasteners, solder, protective coatings, separators, sealants, and other miscellaneous items as required to complete sheet metal flashing and trim system.
2. Install sheet metal flashing and trim true to line, levels, and slopes. Provide uniform, neat seams with minimum exposure of solder or sealant.
3. Anchor sheet metal flashing and trim and other components of the Work securely in place, with provisions for thermal and structural movement.
4. Install sheet metal flashing and trim to fit substrates and to result in watertight performance.
5. Install continuous cleats with fasteners spaced not more than 12 inches o.c.
6. Space individual cleats not more than 12 inches apart. Attach each cleat with at least two fasteners. Bend tabs over fasteners.
7. Install exposed sheet metal flashing and trim with limited oil-canning, and free of buckling and tool marks.
8. Do not field cut sheet metal flashing and trim by torch.

B. Metal Protection: Where dissimilar metals contact each other, or where metal contacts pressure-treated wood or other corrosive substrates, protect against galvanic action or corrosion by painting contact surfaces with bituminous coating or by other permanent separation as recommended by sheet metal manufacturer or cited sheet metal standard.

1. Coat concealed side of uncoated stainless steel sheet metal flashing and trim with bituminous coating where flashing and trim contact wood, ferrous metal, or cementitious construction.
2. Underlayment: Where installing sheet metal flashing and trim directly on cementitious or wood substrates, install underlayment and cover with slip sheet.

C. Expansion Provisions: Provide for thermal expansion of exposed flashing and trim.

1. Space movement joints at maximum of 10 feet with no joints within 24 inches of corner or intersection.
2. Form expansion joints of intermeshing hooked flanges, not less than 1 inch deep, filled with sealant concealed within joints.
3. Use lapped expansion joints only where indicated on Drawings.

D. Fasteners: Use fastener sizes that penetrate wood blocking or sheathing not less than 1-1/4 inches for nails and not less than 3/4 inch for wood screws and substrate not less than recommended by fastener manufacturer to achieve maximum pull-out resistance.

E. Conceal fasteners and expansion provisions where possible in exposed work and locate to minimize possibility of leakage. Cover and seal fasteners and anchors as required for a tight installation.

F. Seal joints as required for watertight construction.

1. Use sealant-filled joints unless otherwise indicated.

a. Embed hooked flanges of joint members not less than 1 inch into sealant.
b. Form joints to completely conceal sealant.
c. When ambient temperature at time of installation is between 40 and 70 deg F, set joint members for 50 percent movement each way.
d. Adjust setting proportionately for installation at higher ambient temperatures.

1) Do not install sealant-type joints at temperatures below 40 deg F.

2. Prepare joints and apply sealants to comply with requirements in Section 079200 "Joint Sealants."

G. Soldered Joints: Clean surfaces to be soldered, removing oils and foreign matter.

1. Pretin edges of sheets with solder to width of 1-1/2 inches; however, reduce pretinning where pretinned surface would show in completed Work.
2. Do not solder metallic-coated steel aluminum sheet.
3. Do not pretin zinc-tin alloy-coated copper.
4. Do not use torches for soldering.
5. Heat surfaces to receive solder, and flow solder into joint.

a. Fill joint completely.
b. Completely remove flux and spatter from exposed surfaces.

6. Stainless Steel Soldering:

a. Tin edges of uncoated sheets, using solder for stainless steel and acid flux.
b. Promptly remove acid-flux residue from metal after tinning and soldering.
c. Comply with solder manufacturer's recommended methods for cleaning and neutralization.

H. Rivets: Rivet joints in uncoated aluminum where necessary for strength.

3.3 INSTALLATION OF ROOF-DRAINAGE SYSTEM

A. Install sheet metal roof-drainage items to produce complete roof-drainage system in accordance with cited sheet metal standard unless otherwise indicated. Coordinate installation of roof perimeter flashing with installation of roof-drainage system.

B. Parapet Scuppers:

1. Continuously support scupper, set to correct elevation, and seal flanges to interior wall face, over cants or tapered edge strips, and under roofing membrane.
2. Anchor scupper closure trim flange to exterior wall and solder seal with elastomeric sealant to scupper.
3. Loosely lock front edge of scupper with conductor head.
4. Solder seal with elastomeric sealant exterior wall scupper flanges into back of conductor head.

C. Expansion-Joint Covers: Install expansion-joint covers at locations and of configuration indicated on Drawings. Lap joints minimum of 4 inches in direction of water flow.

3.4 INSTALLATION OF ROOF FLASHINGS

A. Install sheet metal flashing and trim to comply with performance requirements, sheet metal manufacturer's written installation instructions, and cited sheet metal standard.

1. Provide concealed fasteners where possible, and set units true to line, levels, and slopes.
2. Install work with laps, joints, and seams that are permanently watertight and weather resistant.

B. Copings:

1. Install roof edge flashings in accordance with ANSI/SPRI/FM 4435/ES-1.
2. Anchor to resist uplift and outward forces in accordance with recommendations in cited sheet metal standard unless otherwise indicated.

   a. Interlock exterior bottom edge of coping with continuous cleat anchored to substrate at 16-inch centers.
   b. Anchor interior leg of coping with washers and screw fasteners through slotted holes at 12-inch centers.

C. Pipe or Post Counterflashing: Install counterflashing umbrella with close-fitting collar with top edge flared for elastomeric sealant, extending minimum of 4 inches over base flashing. Install stainless steel draw band and tighten.

D. Counterflashing: Coordinate installation of counterflashing with installation of base flashing.

1. Insert counterflashing in reglets or receivers at existing conditions where they occur and fit tightly to base flashing.
2. Install counterflashing with termination bar with top edge flared for elastomeric sealant. Anchor with washers and screws at 12-inch centers.
3. Extend counterflashing 4 inches over base flashing.
4. Lap counterflashing joints minimum of 4 inches.

E. Roof-Penetration Flashing: Coordinate installation of roof-penetration flashing with installation of roofing and other items penetrating roof. Seal with elastomeric butyl sealant and clamp flashing to pipes that penetrate roof.

3.5 INSTALLATION OF WALL FLASHINGS

A. Install sheet metal wall flashing to intercept and exclude penetrating moisture in accordance with cited sheet metal standard unless otherwise indicated. Coordinate installation of wall flashing with installation of wall-opening components such as windows, doors, and louvers.

3.6 INSTALLATION TOLERANCES

A. Installation Tolerances: Shim and align sheet metal flashing and trim within installed tolerance of 1/4 inch in 20 feet on slope and location lines indicated on Drawings and within 1/8-inch offset of adjoining faces and of alignment of matching profiles.

3.7 CLEANING

A. Clean exposed metal surfaces of substances that interfere with uniform oxidation and weathering.

B. Clean and neutralize flux materials. Clean off excess solder.

C. Clean off excess sealants.

3.8 PROTECTION

A. Remove temporary protective coverings and strippable films as sheet metal flashing and trim are installed unless otherwise indicated in manufacturer's written installation instructions.

B. Replace sheet metal flashing and trim that have been damaged or that have deteriorated beyond successful repair by finish touchup or similar minor repair procedures, as determined by Architect.

END OF SECTION **076200**

THIS SHEET INTENTIONALLY LEFT BLANK

SECTION 07 70 00 - ROOF ACCESSORIES

PART 1 GENERAL

1.1 SECTION INCLUDES

A. Rooftop support products including:
   1. Non-penetrating Base Strut support.
   2. Access products.
   3. Accessories.

1.2 RELATED SECTIONS

A. Section 05 50 00 - Metal Fabrications.

B. Division 07 - Thermal and Moisture Protection.

1.3 REFERENCES

A. ASTM International (ASTM):
   1. ASTM A1011 SS GR33 - Standard Specification for hot rolled carbon steel sheet and strip, structural quality. (Hot Rolled Channel - Hot-Dipped Galvanized Finish).
   2. ASTM A123 - Standard Specification for Zinc (Hot-Dip Galvanized) Coatings on Iron and Steel Products.
   3. ASTM A153 - Standard Specification for zinc Coating (Hot-Dip) on Iron and Steel Hardware.
   4. ASTM A525 - Specification for General Requirements for Steel Sheet, Zinc-Coated (Galvanized) by the Hot-Dip Process.
   5. ASTM D1929 - Standard Test Method for Determining Ignition Temperature of Plastics.

B. American National Standards Institute (ANSI):
   1. ANSI / MSS SP-58 - Pipe Hangers and Supports - Materials, Design, Manufacture, Selection, Application and Installation.
   2. ANSI / MSS SP-69 - Pipe Hangers and Supports - Selection and Application.
   3. ANSI / MSS SP-127 - Bracing for Piping Systems Seismic-Wind-Dynamic Design, Selection and Application.

C. American Iron and Steel Institute (AISI):
   1. AISI Specifications for the Design of Cold-Formed Steel Structural Members, 2007 Edition.

D. American Institute of Steel Construction (AISC):
   1. Steel Construction Manual, 14th Edition.

E. American Society of Civil Engineers (ASCE):
   1. ASCE 7 - Minimum Design Loads for Buildings and Other Structures.

F. International Code Council (ICC):
   1. International Building Code.
   2. International Mechanical Code.
   3. International Fuel and Gas Code.

G. Occupational Safety and Health Administration (OSHA):
   1. Safety and Health Regulations for Construction, Fall Protection.
   2. OSHA 1910, Subpart D, Walking and Working Surfaces.

1.4 SUBMITTALS

A. Submit under provisions of Section 01 31 00.

B. Product Data: Manufacturer's data sheets on each product to be used, including:
   1. Preparation instructions and recommendations.
   2. Storage and handling requirements and recommendations.
   3. Installation methods.

C. Shop Drawings:
   1. Provide project specific, engineered stamped shop drawings and calculations including extents of installation, load bearing capacity and structural requirements.
   2. Show installation layout, indicating product type and spacing. Coordinate with manufacturer's take off evaluations, measurements, control dimensions, and rooftop requirements analysis.
   3. Show details of each roofing system including material layers and thicknesses, flashing, terminations, and penetrations with each rooftop support system to be installed.
   4. All supports shall be pre-assembled and shipped for turnkey installation. Indicate all steps and preparation required by others.

D. Manufacturer's Certification:
   1. Additions/Renovations Product Certificates: Manufacturer's product certification includes review and provided products in accordance with approved and accepted HVAC, Plumbing, Electrical or Equipment plans provided by others. Manufacturer is not responsible for evaluation, design, or certification of the building structure or equipment being supported. All existing conditions, dimensions, locations and elevations of existing equipment shall be verified by the General Contractor in the field and coordinated with new construction prior to preparation of shop drawings, fabrication, or commencement of work. If discrepancies are discovered between existing conditions and new work, the General Contractor shall immediately notify the Manufacturer prior to performance of shop drawings, fabrication, or commencement of work.
   2. Installer Qualifications: Certified by the manufacturer.

1.5 QUALITY ASSURANCE

A. Manufacturer Qualifications: Company with minimum 20 years of experience and specializing in the manufacture and distribution of engineered rooftop support systems.
   1. Manufacturer's custom work process shall include the following steps:
      a. Project concept development and consulting.
      b. Design and engineering including quantity and type of supports and accessories.
      c. Fabrication and delivery.
      d. On site evaluation that installation meets specifications herein and manufacturer requirements.
      e. Owner training and maintenance instruction.

B. Installer Qualifications: Approved by the manufacturer, with minimum 5 years of experience installing similar products.

C. Mock-Up: Provide a mock-up for evaluation of surface preparation techniques and application workmanship.
   1. Finish areas designated by Architect.
   2. Do not proceed with remaining work until workmanship is approved by Architect.
   3. Refinish mock-up area as required to produce acceptable work.

1.6 DELIVERY, STORAGE, AND HANDLING

A. Deliver and store products in manufacturer's unopened packaging bearing the brand name and manufacturer's identification, product model names and catalog numbers, and related information until ready for installation.

B. Store materials off the ground under ventilated covers until ready for installation.

C. Handle materials to avoid damage.

1.7 PROJECT CONDITIONS

A. Quantity Take Off: A manufacturer certified technician shall perform on-site quantity take-off including the following:
   1. Field measurements.
      a. Where field measurements are not possible during design or construction, show control dimensions and project specific information on shop drawings.
   2. Design and layout.
   3. Product designation and tagging.

B. Do not install products under environmental conditions outside manufacturer's recommended limits.

C. Coordinate with roofing, mechanical, electrical and other related trades as required.

1.8 SEQUENCING

A. Ensure that products of this section are supplied to affected trades in time to prevent interruption of construction progress.

1.9 WARRANTY

A. Provide manufacturers standard product warranty against defects in manufacturing, proper operation, and against damaging roofing membrane when products are installed in accordance with engineered shop drawings and manufacturer's instructions. Warranty is not a maintenance agreement, insurance policy or obligation to repair leaks determined to be a result of the building design, installation, construction error, misuse of system, failure to inspect or maintain system or other limitations in manufacturer's standard warranty.
   1. Warranty Period: 20 years.

PART 2 PRODUCTS

2.1 MANUFACTURERS

A. Acceptable Manufacturer:

   1. MIRO Industries Inc.
   2. Unistrut Unipier
   3. PHP Systems / Design
   4. Eaton

2.2 GENERAL

A. Support system designed to absorb thermal expansion and contraction of pipes to prevent damage to roofing membranes using non-corrosive bases that rest on roofing membranes including:
   1. Gently rounded edges to prevent damage to roofing membrane.
   2. Drainage ports to prevent ponding.

3. Carbon black additive in polycarbonate for UV stabilization, stainless steel and hot-dipped galvanized bases are available as specified below.

B. Loading and Design Constraints:
1. Design values are based on rooftop applications only. For other applications contact manufacture for allowable loading.
2. Maximum loading from base to finished roof surface not to exceed 3.0 psi (0.021 Mpa) unless specifically indicated in project specifications.
3. Horizontal deflection not to exceed the span length divided by 360 (*l/360)* or 1/8 inch (3.175 mm).

C. Include manufacturers pipe guides, spacers, clamps, support pads, 2-sided tape and other recommended accessories.

2.3 PIPE SUPPORT

A. Non-penetrating-Base Strut-Support: Pipe support with strut used to support roof-mounted electrical conduit, solar piping, solar racking, gas piping, cable trays, or other mechanical equipment with the following properties:
1. Base Material: Polycarbonate.
2. Deck Base: 7-1/2 by 10 inch (190 by 254 mm) minimum.
3. Pipe Clearance: Selecte
4. Maximum Load Weight: 172 pounds (78 kg) per pipestand.
5. Pipe Rest: 8 inch (203 mm) hot-dipped galvanized steel struts connected with hot-dipped galvanized bolts to the base.
6. Spacing: Horizontal support spacing per pipe specification, or horizontal pipe support intervals per the appropriate code or standard. Manufacturer's suggested spacing shall not exceed 10 foot (3 m) centers, as loading permits.
7. If supporting insulated pipe, a shield or saddle shall be used.
8. Strut clamps may be used to attach components to the support.

2.4 ACCESS PRODUCTS

A. Landing Platform: Custom designed and engineered by manufacturer or third party engineer to meet project specific requirements, OSHA 1910 Subpart D standards including handrails, and the following:
1. Height Required: As shown on drawings.
2. Length Required: 5’-0”.
3. Width Required: 5’-0”.
4. Deck Bases: Hot-dipped galvanized steel, 12 by 16 inch (305 by 406 mm).
5. Metal Components: Hot-dipped galvanized steel.
6. Walking Surfaces: Bar Grating with serrated surface.
7. Structural Design Criteria: Platform shall support live load of 40 PSF plus dead load of its own weight.
8. Wind and Seismic Design Criteria:
   a. Adopted Building Code: IBC 2015.
   b. Building Risk/Occupancy Category: III.
   c. Wind Design Criteria:
      1) Mean Roof Height:115’.
      2) Basic Wind Speed:151 MPH (3 Second Gust).
      3) Exposure Category: C.
9. Platform structures that are exposed to wind shall be designed and installed to resist wind pressures determined in accordance with ASCE 7 chapter 29.
10. The design requirements for crossover structures, components, supports and attachments shall be supported by one of the following methods:
    a. Project-specific engineering design and documentation, submitted for approval to the authority having jurisdiction after review and acceptance by a registered

design professional.

b. Submittal of manufacturer's certification that the component is qualified by an independent third party via either analysis or testing in accordance with industry standards.

c. Engineering shall be performed by a civil / structural engineer licensed to practice in the state of Louisiana.

2.5 ACCESSORIES

A. Support Pads: Designed specifically to fit non-penetrating rooftop supports for additional protection of the rooftop envelope. Slip resistant pads are heat molded with a small lip to hold the support pad and reduce movement on the rooftop. Holes in the pad save weight and allow for venting and drainage.
   1. Support Pad Material: 100 percent recycled rubber.
   2. Dimensions: To fit non-penetrating bases.

PART 3 EXECUTION

3.1 EXAMINATION

A. Do not begin installation until substrates have been properly prepared.

B. If substrate preparation is the responsibility of another installer, notify Architect of unsatisfactory preparation before proceeding.

C. Field Measurements and Quantity Take Off: A manufacturer certified technician shall perform on-site field measurements, coordinate design and layout, designate and tag products based on project conditions.

3.2 PREPARATION

A. Clean roofing surfaces in accordance with the roofing manufacturer's instructions prior to installation.

B. Prepare surfaces using the methods recommended by the roofing manufacturer for achieving the best result for each substrate and maintain roof warranties under the project conditions.
   1. For built-up roofs, all loose aggregate shall be removed from an area 2 inch (51 mm) outside each base footprint.

3.3 INSTALLATION

A. Supports shall be installed as per the product specifications and or project specific submittals.

B. Install an additional sheet of roofing material, a support pad, or a deck plate beneath the base of each stand.

C. Place the supports:
   1. Center each stand beneath the component so supports are aligned.
   2. If more than one pipe is being supported, adjust for even weight distribution.
   3. Set pipe in support without dropping or causing undue impact.

D. Adjustable Supports: Adjust height of each support to achieve proper height and level before installing supported item.
   1. Level hangers, rollers or struts before installing component.
   2. Make final height adjustments to provide even distribution of load on all supports.

3.4 FIELD QUALITY CONTROL

A. When requested by Architect, provide a factory-trained representative of manufacturer to visit site while work is in progress to assure that installation complies with design requirements and manufacturer's installation requirements.

B. After system startup, correct any deficiencies that arise, including but not limited to, improper location or position, improper seating or level on the roof, lack of roof pads or deck plates, inadequate operation, and as directed by Architect.

3.5 PROTECTION

A. Protect installed products until completion of project.

B. Touch-up, repair or replace damaged products before Substantial Completion.

END OF SECTION **077000**

SECTION 079200 - JOINT SEALANTS

PART 1 - GENERAL

1.1 SUMMARY

A. Section Includes:

1. Nonstaining silicone joint sealants.
2. Urethane joint sealants.
3. Butyl-rubber mastic adhesive

1.2 PREINSTALLATION MEETINGS

A. Preinstallation Conference: Conduct conference at Project site.

1.3 ACTION SUBMITTALS

A. Product data.

B. Samples: Manufacturer's standard color charts consisting of strips of cured sealants showing the full range of colors available for each product exposed to view.

C. Joint-sealant schedule.

1.4 INFORMATIONAL SUBMITTALS

A. Field Quality-Control Submittals:

1. Preconstruction Compatibility and Field Adhesion Testing reports: For each sealant application tested.

1.5 CLOSEOUT SUBMITTALS

A. Warranty Documentation:

1. Manufacturers' special warranties.
2. Installer's special warranties.

1.6 QUALITY ASSURANCE

A. Qualifications:

1. Installers: Authorized representative who is trained and approved by manufacturer.
2. Testing Agency: Qualified in accordance with ASTM C1021 to conduct the testing indicated.

1.7 WARRANTY

A. Special Installer's Warranty: Installer agrees to repair or replace joint sealants that do not comply with performance and other requirements specified in this Section within specified warranty period.

1. Warranty Period: Three years from date of Substantial Completion.

B. Special Manufacturer's Warranty: Manufacturer agrees to furnish joint sealants to repair or replace those joint sealants that do not comply with performance and other requirements specified in this Section within specified warranty period.

1. Warranty Period: Twenty years from date of Substantial Completion.

C. Special warranties specified in this article exclude deterioration or failure of joint sealants from the following:

1. Movement of the structure caused by stresses on the sealant exceeding sealant manufacturer's written specifications for sealant elongation and compression.
2. Disintegration of joint substrates from causes exceeding design specifications.
3. Mechanical damage caused by individuals, tools, or other outside agents.
4. Changes in sealant appearance caused by accumulation of dirt or other atmospheric contaminants.

PART 2 - PRODUCTS

2.1 JOINT SEALANTS, GENERAL

A. Compatibility: Provide joint sealants, backings, and other related materials that are compatible with one another and with joint substrates under conditions of service and application, as demonstrated by joint-sealant manufacturer, based on testing and field experience.

B. Colors of Exposed Joint Sealants: As indicated by manufacturer's designations as selected by Architect from manufacturer's full range.

2.2 NONSTAINING SILICONE JOINT SEALANTS

A. Nonstaining Joint Sealants: No staining of substrates when tested in accordance with ASTM C1248.

B. Silicone, Nonstaining, S, NS, 100/50, NT: Nonstaining, single-component, nonsag, plus 100 percent and minus 50 percent movement capability, nontraffic-use, neutral-curing silicone joint sealant; ASTM C920, Type S, Grade NS, Class 100/50, Use NT.

1. Manufacturers: Subject to compliance with requirements, provide products by one of the following:

a. Sika Corporation; Joint Sealants.
b. Pecora Corporation
c. BASF – Master Builders Solutions
d. 3M Corporation
e. GE / Bostik Construction Products

f. Tremco Incorporated

2.3 URETHANE JOINT SEALANTS

A. Urethane, S, NS, 100/50, T, NT: Single-component, nonsag, plus 100 percent and minus 50 percent movement capability, traffic- and nontraffic-use, urethane joint sealant; ASTM C920, Type S, Grade NS, Class 100/50, Uses T and NT.

1. Manufacturers: Subject to compliance with requirements, provide products by one of the following:
   a. Sika Corporation; Joint Sealants.
   b. Pecora Corporation
   c. BASF – Master Builders Solutions
   d. 3M Corporation
   e. GE / Bostik Construction Products
   f. Tremco Incorporated

2.4 BUTYL-RUBBER MASTIC SEALANT / ADHESIVE

A. Butyl rubber based joint sealant / adhesive; blend of butyl rubber and polyisobutylene; flexible. Plus 10 percent and minus 10 percent movement. Conforms to US Federal Specification TT-S-001657, Type 1; ASTM C1311.

1. Manufacturers: Subject to compliance with requirements, provide products by one of the following:
   a. Sika Corporation; Joint Sealants.
   b. Pecora Corporation
   c. BASF – Master Builders Solutions
   d. 3M Corporation
   e. GE / Bostik Construction Products
   f. Tremco Incorporated

2.5 JOINT-SEALANT BACKING

A. Sealant Backing Material, General: Nonstaining; compatible with joint substrates, sealants, primers, and other joint fillers; and approved for applications indicated by sealant manufacturer based on field experience and laboratory testing.

1. Manufacturers: Subject to compliance with requirements, provide products by one of the following:

   a. Adfast.
   b. Alcot Plastics Ltd.
   c. Construction Foam Products; a division of Nomaco, Inc.
   d. Master Builders Solutions.

B. Cylindrical Sealant Backings: ASTM C1330, [Type C (closed-cell material with a surface skin, as approved in writing by joint-sealant manufacturer for joint application indicated, and of size and density to control sealant depth and otherwise contribute to producing optimum sealant performance.

C. Bond-Breaker Tape: Polyethylene tape or other plastic tape recommended by sealant manufacturer for preventing sealant from adhering to rigid, inflexible joint-filler materials or joint surfaces at back of joint. Provide self-adhesive tape where applicable.

2.6 MISCELLANEOUS MATERIALS

A. Primer: Material recommended by joint-sealant manufacturer where required for adhesion of sealant to joint substrates indicated, as determined from preconstruction joint-sealant-substrate tests and field tests.

B. Cleaners for Nonporous Surfaces: Chemical cleaners acceptable to manufacturers of sealants and sealant backing materials, free of oily residues or other substances capable of staining or harming joint substrates and adjacent nonporous surfaces in any way, and formulated to promote optimum adhesion of sealants to joint substrates.

C. Masking Tape: Nonstaining, nonabsorbent material compatible with joint sealants and surfaces adjacent to joints.

PART 3 - EXECUTION

3.1 PREPARATION

A. Surface Cleaning of Joints: Clean out joints immediately before installing joint sealants to comply with joint-sealant manufacturer's written instructions and the following requirements:

1. Remove all foreign material from joint substrates that could interfere with adhesion of joint sealant, including dust, paints (except for permanent, protective coatings tested and approved for sealant adhesion and compatibility by sealant manufacturer), old joint sealants, oil, grease, waterproofing, water repellents, water, surface dirt, and frost.
2. Clean porous joint substrate surfaces by brushing, grinding, mechanical abrading, or a combination of these methods to produce a clean, sound substrate capable of developing optimum bond with joint sealants. Remove loose particles remaining after cleaning operations above by vacuuming or blowing out joints with oil-free compressed air. Porous joint substrates include the following:

    a. Concrete.
    b. Roofing system components.

3. Remove laitance and form-release agents from concrete.
4. Clean nonporous joint substrate surfaces with chemical cleaners or other means that do not stain, harm substrates, or leave residues capable of interfering with adhesion of joint sealants. Nonporous joint substrates include the following:

    a. Metal.
    b. Roofing system components.

B. Joint Priming: Prime joint substrates where recommended by joint-sealant manufacturer or as indicated by preconstruction joint-sealant-substrate tests or prior experience. Apply primer to comply with joint-sealant manufacturer's written instructions. Confine primers to areas of joint-sealant bond; do not allow spillage or migration onto adjoining surfaces.

C. Masking Tape: Use masking tape where required to prevent contact of sealant or primer with adjoining surfaces that otherwise would be permanently stained or damaged by such contact or by cleaning methods required to remove sealant smears. Remove tape immediately after tooling without disturbing joint seal.

3.2 INSTALLATION OF JOINT SEALANTS

A. General: Comply with joint-sealant manufacturer's written installation instructions for products and applications indicated, unless more stringent requirements apply.

B. Sealant Installation Standard: Comply with recommendations in ASTM C1193 for use of joint sealants as applicable to materials, applications, and conditions indicated.

C. Install sealant backings of type indicated to support sealants during application and at position required to produce cross-sectional shapes and depths of installed sealants relative to joint widths that allow optimum sealant movement capability.

1. Do not leave gaps between ends of sealant backings.
2. Do not stretch, twist, puncture, or tear sealant backings.
3. Remove absorbent sealant backings that have become wet before sealant application, and replace them with dry materials.

D. Install bond-breaker tape behind sealants where sealant backings are not used between sealants and backs of joints.

E. Install sealants using proven techniques that comply with the following and at the same time backings are installed:

1. Place sealants so they directly contact and fully wet joint substrates.
2. Completely fill recesses in each joint configuration.
3. Produce uniform, cross-sectional shapes and depths relative to joint widths that allow optimum sealant movement capability.

F. Tooling of Nonsag Sealants: Immediately after sealant application and before skinning or curing begins, tool sealants according to requirements specified in subparagraphs below to form smooth, uniform beads of configuration indicated; to eliminate air pockets; and to ensure contact and adhesion of sealant with sides of joint.

1. Remove excess sealant from surfaces adjacent to joints.
2. Use tooling agents that are approved in writing by sealant manufacturer and that do not discolor sealants or adjacent surfaces.
3. Provide concave joint profile in accordance with Figure 8A in ASTM C1193 unless otherwise indicated.

G. Clean off excess sealant or sealant smears adjacent to joints as the Work progresses by methods and with cleaning materials approved in writing by manufacturers of joint sealants and of products in which joints occur.

H. Protect joint sealants during and after curing period from contact with contaminating substances and from damage resulting from construction operations or other causes so sealants are without deterioration or damage at time of Substantial Completion. If, despite such protection, damage or deterioration occurs, cut out, remove, and repair damaged or deteriorated joint sealants immediately so installations with repaired areas are indistinguishable from original work.

3.3 FIELD QUALITY CONTROL

A. Testing Agency: Owner will engage a qualified testing agency to perform tests and inspections.

B. Tests and Inspections:

1. Field-Adhesion Testing: Field test joint-sealant adhesion to joint substrates as follows:

a. Extent of Testing: Test completed and cured sealant joints as follows:

1) Perform 10 tests for the first 1000 ft. of joint length for each kind of sealant and joint substrate.
2) Perform one test for each 1000 ft. of joint length thereafter.

b. Test Method: Test joint sealants in accordance with Method A, Field-Applied Sealant Joint Hand Pull Tab, in Appendix X1 in ASTM C1193 or Method A, Tail Procedure, in ASTM C1521.

1) For joints with dissimilar substrates, verify adhesion to each substrate separately; extend cut along one side, verifying adhesion to opposite side. Repeat procedure for opposite side.

c. Inspect tested joints and report on the following:

1) Whether sealants filled joint cavities and are free of voids.
2) Whether sealant dimensions and configurations comply with specified requirements.
3) Whether sealants in joints connected to pulled-out portion failed to adhere to joint substrates or tore cohesively. Include data on pull distance used to test each kind of product and joint substrate. Compare these results to determine if adhesion complies with sealant manufacturer's field-adhesion hand-pull test criteria.

d. Record test results in a field-adhesion-test log. Include dates when sealants were installed, names of persons who installed sealants, test dates, test locations, whether joints were primed, adhesion results and percent elongations, sealant material, sealant configuration, and sealant dimensions.
e. Repair sealants pulled from test area by applying new sealants following same procedures used originally to seal joints. Ensure that original sealant surfaces are clean and that new sealant contacts original sealant.

2. Evaluation of Field-Adhesion-Test Results: Sealants not evidencing adhesive failure from testing or noncompliance with other indicated requirements will be considered satisfactory. Remove sealants that fail to adhere to joint substrates during testing or to comply with other requirements. Retest failed applications until test results prove sealants comply with indicated requirements.

C. Prepare test and inspection reports.

3.4 JOINT-SEALANT SCHEDULE

A. Exterior joints in vertical surfaces and horizontal nontraffic surfaces JS-1:

1. Joint Locations:

a. Joints between roofing / flashing system materials and adjacent construction.
b. Joints in exterior finish systems.
c. Joints between metal panels, including flashing.
d. Joints between different materials listed above.
e. Perimeter joints between materials listed above and frames of doors and louvers.
f. Other joints as indicated on Drawings.

2. Joint Sealant: Silicone, nonstaining, S, NS, 50, NT.
3. Joint-Sealant Color: As selected by Architect from manufacturer's full range of colors.

B. Concealed mastics JS-2:

1. Joint Locations:

a. Aluminum thresholds.
b. Sill plates.
c. Roof accessory baseplates & roofing system.
d. Other joints as indicated on Drawings.

2. Joint Sealant: Butyl-rubber based.
3. Joint-Sealant Color: As selected by Architect from manufacturer's full range of colors.

END OF SECTION **079200**

THIS SHEET INTENTIONALLY LEFT BLANK

ROOF REPLACEMENT

SECTION B OF THE
ENGINEERING BUILDING

UNIVERSITY OF NEW ORLEANS - MAIN CAMPUS

ARCHITECT

Holly & Smith Architects, APAC
2302 Magazine Street
New Orleans, LA 70130
504.585.1315

BID DOCUMENTS

OWNER

University of New Orleans
2000 Lakeshore Drive
New Orleans, LA 70148
(504) 280-6000

INDEX OF DRAWINGS

G100 COVER SHEET / DRAWING INDEX / VICINITY PLAN
G101 GENERAL INFORMATION, LEGENDS

ARCHITECTURAL

A001 EXISTING CONDITIONS / DEMOLITION PLAN
A011 EXISTING CONDITIONS / DEMOLITION PICTURES
A901 ROOF PLAN
A911 ROOF DETAILS
A912 ROOF DETAILS

PROJECT INFORMATION

PROJECT DESCRIPTION:	REPLACE THE ROOF IN SECTION B OF THE EXIST ENGINEERING BLDG. REWORK OR REPLACE ASSOCIATED FLASHING, CURBS, EQUIPMENT SUPPORTS, UTILITY CONNECTIONS, ETC
PROJECT ADDRESS:	2000 LAKESHORE DR. NEW ORLEANS, LA 70148
HISTORIC / OVERLAY DISTRICT:	HUC - HIST. URBAN CORR. USE RESTRICTION OVERLAY DIST. EC - ENHANCEMENT CORRIDOR OVERLAY DISTRICT
PLANNING DISTRICT:	6
EXISTING ZONING:	EC - Educational Campus
FEMA FLOOD ZONE:	N/A
EXISTING USE:	UNOCCUPIED ROOF
PROPOSED USE:	UNOCCUPIED ROOF

VICINITY MAP

SCALE: N.T.S.

SITE

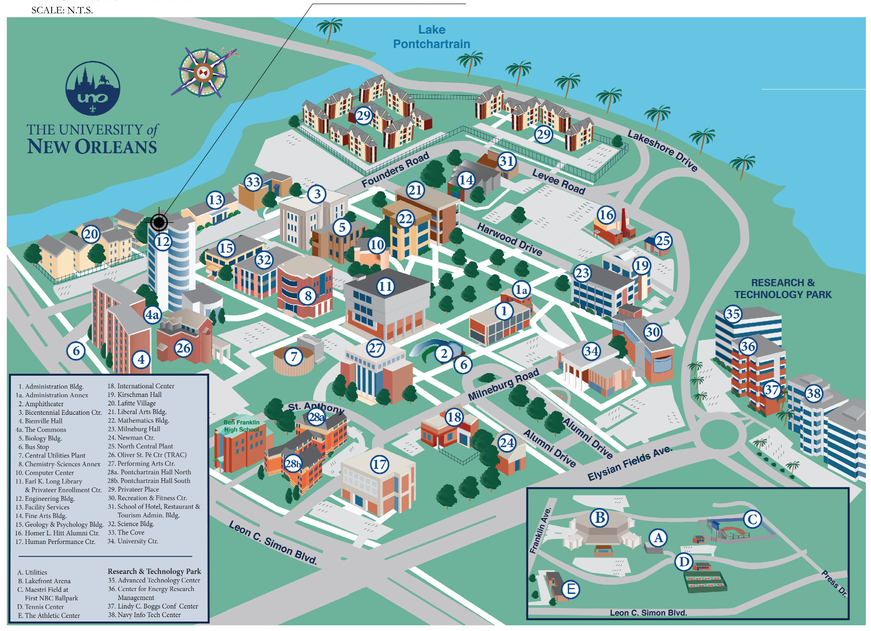

WIND UPLIFT CALCULATIONS

WIND LOAD (ASCE 7-10):

BASIC WIND SPEED = 151 MPH
RISK CATEGORY = III
EXPOSURE CATEGORY = C

WIND UPLIFT RATING (FM GLOBAL):

MINIMUM FM APPROVED WIND UPLIFT RATINGS: FIELD = CLASS 1-135
PERIMETER = CLASS-1-225
CORNER = CLASS 1-330

ALTERNATES

ADDITTIVE ALTERNATE #1

PROVIDE ALL LABOR, MATERIAL, EQUIPMENT, AND INCIDENTALS AS REQUIRED TO DO THE FOLLOWING:

DEMO, REMOVE & REPLACE THE EXIST. STAINLESS STEEL COPING / CAP FLASHING SYSTEM ALONG THE ENTIRE PERIMETER OF SECTION B OF THE BUILDING WITH PREFIN. ALUMINUM FLASHING SIMILAR TO EXISTING; INCLUDING ALL CLIPS, CLEATS, PR. TRT'D WOOD NAILERS, COPING COUNTERFL AT PENTHOUSE WALL ETC. SCRAPE LOOSE WATERPROOFING MATERIAL FROM THE BACK OF THE PARAPET WALL AND ADHESIVE APPLY 1/2" CEMENT BOARD OVER EXISTING MATERIALS. ADD SBS BASE LAYER WALL FLASHING MATERIAL UP FACE OF CEMENT BOARD AND OVER TOP OF WOOD NAILER. ADD METAL COATED FLASHING UP PARAPET WALL OVER BASE SHEET. NOTE THIS WILL MODIFY RECEIVER & COUNTERFLASHING AT ROOF LINE. SEE ALSO SPEC SECTION 075500 ROOFING

ADDITTIVE ALTERNATE #2

PROVIDE ALL LABOR, MATERIAL, EQUIPMENT, AND INCIDENTALS AS REQUIRED TO DO THE FOLLOWING:

PROVIDE & INSTALL A LAYER OF BASE FLASHING MEMBRANE OVER THE ENTIRE EXIST. CONC. DECK PRIOR TO INSTALLING THE TAPERED INSULATION BOARD. SEE ALSO SPEC SECTION 075500 ROOFING

HOLLY & SMITH ARCHITECTS
HAMMOND
T 985.345.5210
NEW ORLEANS
T 504.585.1315
www.hollyandsmith.com

ROOF REPLACEMENT
SECTION B
UNO Engineering Building
2000 Lakeshore Drive, New Orleans, LA 70148

KEVIN J. MORRIS No. 5588 STATE OF LOUISIANA REGISTERED ARCHITECT

DESCRIPTION	DATE

PROJECT NO.	21023
PHASE	CD
DATE	07.19.21
PROJECT MANAGER	RS
QUALITY CONTROL	

This drawing, as an instrument of service, is and shall remain the property of the architect and shall not be reproduced, published, or used in any way without the permission of the architect.
© copyright Holly & Smith Architects, APAC

BID DOCUMENTS

G100

COVER SHEET

H/S

PLOTTED: Jul 19, 2021 9:07am BY: john
XREFS: 21023 TB 24X36 MODIFIED: Jul 19, 2021 9:06am
FILE INFO: P:\21023 UNO Engineering Roof Rplcmt\Drawings\CAD\21023- G100 - TITLE SHEET.dwg

RENOVATION NOTES

1. CONTRACTORS MUST VISIT THE SITE TO VERIFY ALL EXISTING CONDITIONS, BUILDING TYPES AND CONSTRUCTION AND ALL DIMENSIONS. THE CONTRACTOR SHALL VISIT THE PROJECT SITE PRIOR TO SUBMITTING A PROPOSAL OR BID. THE CONTRACTOR SHALL BECOME GENERALLY FAMILIAR WITH THE PROJECT, AND WITH THE IMPACT OF THE NEW WORK ON THE EXISTING CONDITIONS. ANY AREAS OF CONCERN SHALL BE BROUGHT TO THE ATTENTION OF THE ARCHITECT PRIOR TO SUBMITTING A PROPOSAL OR BID. NO ADDITIONAL CHARGE TO THE OWNER WILL BE APPROVED WHICH IS ATTRIBUTABLE TO THE CONTRACTOR'S FAILURE TO COMPLETE THIS RESPONSIBILITY.

2. PROTECT EXISTING WORK WHICH IS TO REMAIN IN PLACE, BE REUSED, OR REMAIN THE PROPERTY OF THE OWNER.

3. REMOVE AND STORE MATERIALS AND EQUIPMENT AT EXISTING SITE INDICATED TO BE REUSED OR RELOCATED TO PREVENT DAMAGE, AND REINSTALL AS THE WORK PROGRESSES.

4. PROTECT ELECTRICAL AND MECHANICAL SERVICES AND UTILITIES WHERE REMOVAL OF EXISTING UTILITIES AND PAVEMENTS IS SPECIFIED. PROVIDE APPROVED BARRICADES, TEMPORARY COVERING OF EXPOSED AREAS, AND TEMPORARY SERVICES OR CONNECTIONS FOR ELECTRICAL AND MECHANICAL UTILITIES.

5. REMOVE EXISTING UTILITIES AS INDICATED AND UNCOVERED BY WORK AND TERMINATE IN A MANNER CONFORMING TO THE NATIONALLY RECOGNIZED CODE OR STANDARD COVERING THE SPECIFIC UTILITY AND APPROVED BY THE ARCHITECT. IF UTILITY LINES ARE ENCOUNTERED THAT ARE NOT SHOWN ON THE DRAWINGS, DO NOT PROCEED. CONTACT THE ARCHITECT FOR FURTHER INSTRUCTIONS.

6. THE INFORMATION CONTAINED ON THESE DRAWINGS WITH REGARD TO THE EXISTING CONDITIONS OF CONSTRUCTION IN NO WAY RELEASES THE CONTRACTOR FROM THE RESPONSIBILITY FOR VERIFYING COMPLETELY ALL FIELD CONDITIONS RELATING TO AND AFFECTING THE EXECUTION OF THE WORK, AS DESCRIBED IN THESE CONTRACT DOCUMENTS.

7. IT IS THE RESPONSIBILITY OF THE CONTRACTOR TO FIELD VERIFY AND DOCUMENT ALL EXISTING DIMENSIONS, ELEVATIONS AND BENCHMARKS, MATERIALS AND METHODS OF CONSTRUCTION THAT MAY AFFECT OR BE AFFECTED BY NEW WORK, AND TO COORDINATE SUCH FIELD VERIFICATION WITH THE CONTRACT DOCUMENTS AND THE EXECUTION OF THE WORK. DISCREPANCIES AND/OR CONFLICTS INVOLVING ANTICIPATED EXISTING CONDITIONS SHALL BE BROUGHT TO THE ARCHITECT'S ATTENTION IMMEDIATELY.

8. IT IS THE RESPONSIBILITY OF THE CONTRACTOR TO ASSIST THE ARCHITECT IN MAKING THEIR EVALUATIONS AND RECOMMENDATIONS BY PROVIDING IN A TIMELY MANNER, AT NO ADDITIONAL COST TO THE OWNER, ACCURATE AND COMPLETE DRAWINGS, SKETCHES, AND PHOTOGRAPHS SUFFICIENT TO CLEARLY DESCRIBE DISCREPANCIES, CONFLICTS, AND CONCEALED OR OTHERWISE UNANTICIPATED EXISTING CONDITIONS AFFECTING NEW CONSTRUCTION.

9. THE ARCHITECT HAS ENDEAVORED TO IDENTIFY AS COMPLETELY AS POSSIBLE IN THE DRAWINGS AND SPECIFICATIONS EXISTING ITEMS OR EQUIPMENT AND CONSTRUCTION THAT ARE REQUIRED TO BE REMOVED OR OTHERWISE DEMOLISHED SO AS TO ALLOW THE EXECUTION OF NEW WORK TO BE PERFORMED. THE INFORMATION IS PROVIDED FOR THE CONVENIENCE OF THE CONTRACTOR, AND IS IN NO WAY INTENDED TO MEAN THAT DEMOLITION IS LIMITED ONLY TO THOSE ITEMS SPECIFICALLY IDENTIFIED. IT IS THE CONTRACTOR'S RESPONSIBILITY TO EXECUTE DEMOLITION WORK AS REQUIRED TO ALLOW THE EXECUTION OF NEW WORK.

10. ALL AREAS ABOVE OR ON THE EXIST. CEILING THAT ARE AFFECTED BY INSTALLATION OF NEW WORK SHALL BE REPAIRED COMPLETELY WITH MATERIALS AND PRODUCTS TO MATCH EXIST. INSTALLATION AND FIRE-RATED ASSEMBLIES.

11. THE CONTRACTOR IS RESPONSIBLE FOR IDENTIFYING ANY UNFINISHED WALL AREAS THAT MAY BE EXPOSED AS A RESULT OF ADJUSTING FINISHED CEILING HEIGHTS. THE CONTRACTOR IS RESPONSIBLE FOR FINISHING THESE AREAS TO MATCH EXISTING ADJACENT FINISHED AREAS AND FIRE-RATED ASSEMBLIES.

12. ANY DEMOLITION SCOPE WHICH MAY POTENTIALLY COMPROMISE THE STRUCTURAL INTEGRITY OF THE EXIST. BUILDING OR NEW CONSTRUCTION, SHALL BE IMMEDIATELY CALLED TO THE ATTENTION OF THE ARCHITECT/ STRUCTURAL ENGINEER, PRIOR TO PERFORMING, OR PROCEEDING WITH ANY WORK.

13. DEMOLITION AND UNCOVERING OF WORK, RESULTING IN BUILDING EXPOSURE TO THE ELEMENTS SHALL RECEIVE TEMPORARY ENCLOSURES AND PROTECTION TO PROHIBIT MOISTURE/WATER ENTRY INTO THE BUILDING. THIS INCLUDES ROOF PENETRATIONS REQUIRED FOR THE PROJECT AND OPENINGS RESULTING FROM THE REMOVAL OF COMPONENTS OF THE EXTERIOR ENVELOPE.

14. EXPANSION JOINTS LOCATED WITHIN THE EXISTING BUILDING SHALL BE MAINTAINED AND ALLOW FOR MOVEMENT, EXPANSION AND DEFLECTION. NO ASPECT OF THE DEMOLITION OR CONSTRUCTION SHALL COMPROMISE THE FUNCTION AND INTEGRITY OF THE EXISTING OR NEW EXPANSION JOINT(S) IN ANY WAY. ALL AREAS OR CONDITIONS IN QUESTION SHALL BE CALLED TO THE ATTENTION OF THE ARCHITECT/STRUCTURAL ENGINEER.

15. AT ANY WALL THAT IS AFFECTED BY DEMOLITION OR CONSTRUCTION, PAINT THE ENTIRE WALL FROM INTERIOR CORNER TO INTERIOR CORNER, AND TOP TO BOTTOM FOR THE ENTIRE LENGTH OF THE WALL.

16. ALL EMERGENCY EXITS SHOULD REMAIN CLEAR AND USABLE THROUGHOUT ENTIRE CONSTRUCTION PROCESS UNLESS SPECIFICALLY COORDINATED FOR LIFE SAFETY MEASURE. PROVIDE ANY TEMPORARY PROTECTIONS, WALKWAYS OR ALTERNATE EGRESS MEANS AS REQUIRED TO ACCOMMODATE THIS. ANY WORK THAT WOULD REQUIRE THE TEMPORARY CLOSURE OF EXITS SHOULD BE CONDUCTED AFTER HOURS, AND COORDINATED WITH THE OWNER'S REPRESENTATIVE.

17. ALL LIFE SAFETY SYSTEMS, FIRE ALARMS, STROBE DEVICES, ANNUNCIATORS, SMOKE DETECTORS, AND PULL STATIONS ARE TO REMAIN COMPLETELY OPERATIONAL THROUGHOUT THE DEMOLITION AND CONSTRUCTION PROCESS FOR OCCUPIED SPACES. THE CONTRACTOR SHALL PROVIDE ADDITIONAL MEASURES FOR AREAS WHERE LIFE SAFETY SYSTEMS ARE TO BE RENDERED INACTIVE AND SHALL COORDINATE ALL SYSTEM INTERRUPTIONS WITH THE STATE FIRE MARSHAL INSPECTOR, PRIOR TO PERFORMING ANY WORK.

18. DISCONNECT AND CAP / TERMINATE EXISTING UTILITIES, POWER, GAS, WATER, ETC. IN ACCORDANCE WITH ALL GOVERNING CODE REQUIREMENTS - REFER TO ENGINEERING DRAWINGS. REROUTE AND REUSE UTILITIES AS REQUIRED TO PREVENT CONFLICTS WITH PLANNED RENOVATIONS.

19. ALL PORTIONS OF THE EXISTING BUILDING SHALL REMAIN WEATHERTIGHT AND SECURED AT ALL TIMES. IF CONSTRUCTION IS POSTPONED, THE CONTRACTOR SHALL SECURE THE BUILDING FROM THE ELEMENTS, INCLEMENT WEATHER, AND VANDALISM.

20. THE PROJECT IS CURRENTLY OCCUPIED, AND MUST REMAIN COMPLETELY OPERATIONAL DURING NORMAL BUSINESS HOURS (7:00 AM TO 6:00 PM WEEKDAYS). COORDINATE WITH THE OWNER ANY CONSTRUCTION ACTIVITIES WHICH MAY IMPEDE NORMAL OPERATIONS, INCLUDING ANY ACTIVITY WHICH GENERATES EXCESSIVE NOISE, AIRBORNE PARTICULATES, OR WHICH DISRUPTS THE NORMAL FUNCTIONALITY OF THE SPACE. PROTECT ANY ADJACENT SPACE WITH DUST PARTITIONS OR CURTAINS FROM ACTIVITIES WHICH WILL CREATE DUST. NOTIFY ANY OCCUPANTS OF THE BUILDING OF ANY CONSTRUCTION ACTIVITIES WHICH MAY AFFECT THEIR ABILITY TO OPERATE NORMALLY.

21. **REMOVE AND TRANSPORT DEBRIS AND RUBBISH IN A MANNER THAT WILL PREVENT SPILLAGE ON PAVEMENTS, STREETS, OR ADJACENT AREAS. CLEAN UP SPILLAGE FROM PAVEMENTS, STREETS, AND ADJACENT AREAS, IN COMPLIANCE WITH ALL LOCAL AND STATE REQUIREMENTS. DESIGNATE ON SITE VEHICLE WASH STATION.**

22. **THE PROJECT WILL REMAIN OCCUPIED AND OPERATIONAL THROUGHOUT CONSTRUCTION. COORDINATE AND PHASE ALL PORTIONS OF THE WORK TO MINIMIZE DISRUPTION TO THE OCCUPANTS AS MUCH AS POSSIBLE. PROVIDE ALL TEMPORARY PROTECTIONS AND CONNECTIONS AS REQUIRED TO MAINTAIN SAFE AND UNINTERRUPTED USE.**

23. **THE EXISTING PLAN IS DOCUMENTED ON THE DRAWINGS IN ACCORDANCE WITH A LIMITED NUMBER OF AVAILABLE ORIGINAL CONSTRUCTION DRAWINGS AND FIELD INVESTIGATIONS. VARIANCE OF ACTUAL EXISTING CONDITIONS FROM THOSE ILLUSTRATED ON THESE DOCUMENTS MAY OCCUR. THE CONTRACTOR SHALL VERIFY EXISTING CONDITIONS PRIOR TO COMMENCING WORK AND REPORT ANY AND ALL DISCREPANCIES.**

GENERAL NOTES

1. PRIOR TO BIDDING, THE CONTRACTOR (AND SUBCONTRACTING BIDDERS) SHALL VISIT THE EXISTING BUILDING, SITE AND SURROUNDING AREA AND THOROUGHLY ACQUAINT THEMSELVES WITH ALL ASPECTS OF THE PROJECT DEMOLITION AND CONSTRUCTION, AS INDICATED AND/OR IMPLIED WITHIN THIS DOCUMENT. ANY DISCREPANCIES, OMISSIONS OR CONFLICTS RELATIVE TO THE INFORMATION CONTAINED WITHIN THE DOCUMENTS, THE FIELD VERIFIED CONDITIONS, OR ITEMS WHICH MAY INTERFERE WITH THE SATISFACTORY COMPLETION OF THE WORK, SHALL BE BROUGHT TO THE ATTENTION OF THE ARCHITECT IMMEDIATELY. FAILURE BY THE CONTRACTOR TO PROVIDE THESE MEASURES SHALL NOT BE JUSTIFICATION FOR ADJUSTMENT IN THE CONTRACT SUM.

2. THE DRAWINGS AND SPECIFICATIONS ARE SEPARATED INTO DISCIPLINES FOR THE CONVENIENCE OF THE ARCHITECT AND THE CONTRACTOR. THE SEPARATIONS USED HEREIN ARE USED ONLY FOR THE PURPOSE OF CONVENIENCE AND REFERENCE AND IN NO WAY DO THEY DEFINE OR LIMIT THE SCOPE OR INTENT OF ANY PART OF THE DRAWINGS OR OF THE DRAWINGS AND SPECIFICATIONS AS A WHOLE. THE FACT THAT THE DRAWINGS ARE SEPARATED IN NO WAY SUGGESTS THAT THE WORK IS NOT TO BE CONSTRUCTED AS A COMPLETE INTEGRATED AND UNIFIED WHOLE.

3. THE DRAWINGS AND SPECIFICATIONS, INCLUDING DRAWINGS PREPARED BY SPECIFIC ENGINEERING DISCIPLINES SUCH AS CIVIL, STRUCTURAL, MECHANICAL, ELECTRICAL, ETC. ARE COMPLIMENTARY. ITEMS SHOWN IN ANY ONE LOCATION OF THE DRAWINGS SHALL BE REQUIREMENTS OF THE CONTRACT FOR CONSTRUCTION. IN THE EVENT OF AN INCONSISTENCY BETWEEN THE DRAWINGS AND THE SPECIFICATIONS OR WITHIN EITHER DOCUMENT, THE CONTRACTOR SHALL SEEK CLARIFICATION OR INTERPRETATION FROM THE ARCHITECT PRIOR TO BIDDING. WHERE INCONSISTENCIES ARE NOT CLARIFIED PRIOR TO BIDDING AND WHERE THE ACTUAL SOLUTION OR INTENT CANNOT BE REASONABLY INFERRED, THE CONTRACTOR SHALL INCLUDE THE BETTER QUALITY OR GREATER QUANTITY OF WORK IN THE BID PROPOSAL.

4. ALL WORK IS TO HAVE A ONE YEAR WARRANTY, MINIMUM.

5. THE DRAWINGS, AND ANY SUBSEQUENTLY ISSUED ADDENDA, AMENDMENTS, FIELD ORDERS, OR CHANGE ORDERS ARE PART OF THESE CONTRACT DOCUMENTS.

6. DO NOT SCALE DRAWINGS, CONSULT WITH ARCHITECT REGARDING CLARIFICATIONS TO DRAWING SCALE.

7. NAMING A CERTAIN BRAND OR MANUFACTURER IS TO DESIGNATE THE GENERAL STYLE, TYPE, CHARACTER, AND QUALITY STANDARD OF THE PRODUCT DESIRED. SUBSTITUTION REQUESTS MUST BE SUBMITTED PRIOR TO BIDDING.

8. CONSTRUCTION GENERATING EXCESSIVE NOISE SHALL BE PERFORMED AFTER HOURS AND/OR COORDINATED WITH OWNER/PROJECT REPRESENTATIVE.

9. IN NO WAY DO THE DIMENSIONS SHOWN ON THE PLANS REPRESENT AN EXACT QUANTITY OF MATERIALS. THE BIDDER IS SOLELY RESPONSIBLE FOR THE QUANTITIES IN HIS BID.

10. THE DRAWINGS REPRESENT GENERAL LOCATIONS OF IMPROVEMENTS. IT SHALL BE THE GENERAL CONTRACTORS RESPONSIBILITY TO LOCATE ALL IMPROVEMENTS ON SITE PRIOR TO ALTERATION, ADDITION, OR TIE-IN. ALL DAMAGE SHALL BE PROPERLY REPAIRED BY THE CONTRACTOR, AT THE CONTRACTOR'S EXPENSE.

11. THE CONTRACTOR SHALL PROTECT THE SITE AND PROPERTY AT ALL TIMES. ALL AREAS SHALL BE MAINTAINED FREE OF TRASH AND CONSTRUCTION DEBRIS AND ALL WASTE SHALL BE REMOVED FROM THE SITE ON A WEEKLY BASIS, AT A MINIMUM, OR AS DIRECTED BY THE OWNER/FACILITY MANAGER. COORDINATE THE EXACT LOCATION FOR THE TRASH DUMPSTER AND STAGING AREAS WITH THE OWNER/FACILITY MANAGER. REMOVAL AND DISPOSAL OF ALL DEBRIS, SUBSTANCES AND MATERIALS IS BE ACCOMPLISHED ACCORDING TO SPECIFICATIONS IN ADDITION TO FEDERAL, STATE, AND LOCAL REGULATIONS.

12. THE STORAGE OF MATERIALS ON SITE SHALL BE ALLOWED IN DESIGNATED AREAS. THESE AREAS WILL BE DETERMINED AT THE PRE-BID MEETING. ANY DAMAGE TO EXISTING AREAS / SURFACES DUE TO STORAGE & STAGING SHALL BE RESTORED TO THE ORIGINAL CONDITION BY GENERAL CONTRACTOR AT THE CONTRACTOR'S EXPENSE.

13. ALL DELIVERIES, STAGING, AND TRASH REMOVAL SHALL BE COORDINATED WITH THE OWNER/PROJECT REPRESENTATIVE, SO AS TO MINIMIZE THE AMOUNT OF DISRUPTION AND TRAFFIC TO THE SURROUNDING NEIGHBORHOOD COMMUNITY. ALL HOURS OF OPERATION SHALL BE AS PRESCRIBED BY THE OWNER/FACILITY MANAGER. THE CONTRACTOR SHALL BE RESPONSIBLE FOR ANY AND ALL DAMAGE TO THE EXISTING SITE AND ADJACENT PROPERTY, DIRECTLY ASSOCIATED WITH THE DEMOLITION AND CONSTRUCTION PROCESS. ALL STREET, PARKING LOT, AND SURFACE PAVING ARE TO BE KEPT CLEAN FROM CONSTRUCTION DEBRIS AND TRASH AND SHALL BE RETURNED TO THEIR ORIGINAL STATE FOLLOWING THE COMPLETION OF THE PROJECT.

14. THE CONTRACTOR SHALL PROVIDE ALL NECESSARY SAFETY APPARATUS, MEANS, METHODS, AND TECHNIQUES, AS REQUIRED TO ENSURE THE HEALTH, SAFETY, AND WELFARE OF ALL PERSONNEL INCLUDING, BUT NOT LIMITED TO: STAFF, FACULTY, STUDENTS, AND THE GENERAL PUBLIC, IN AND AROUND THE SITE.

15. THE CONTRACTOR SHALL PROVIDE TEMPORARY ENCLOSURES AND SITE SECURITY FENCING AS REQUIRED, OR WHERE INDICATED WITHIN THE DOCUMENTS TO SECURE, CONTROL, AND PROTECT ALL AREAS OF CONSTRUCTION AND ALLOW FOR SAFE PASSAGE INTO AND FROM THE BUILDING. ALL ENTRANCES AND EXITS AFFECTED BY THE SCOPE OF THE RENOVATION, SHALL BE MADE ADA ACCESSIBLE. A COMPLETE REVIEW OF ALL SITE PROTECTIVE AND SAFETY MEASURES SHALL BE CONDUCTED WITH THE OWNER/FACILITY MANAGER FOR FINAL APPROVAL, PRIOR TO THE START OF DEMOLITION AND CONSTRUCTION.

16. AREAS WHERE WORK IS BEING CONDUCTED, WHICH MAY AFFECT THE LIFE SAFETY OF THE BUILDING'S OCCUPANTS, SHALL BE CALLED TO THE ATTENTION OF THE OWNER/PROJECT REPRESENTATIVE, PRIOR TO PERFORMING ANY WORK. ADDITIONAL MEASURES FOR OCCUPANT SAFETY MAY BE REQUIRED, AS PRESCRIBED BY THE STATE FIRE MARSHAL, BASED UPON A REVIEW, OR INSPECTION OF A SPECIFIC AREA OR CONDITION.

17. THE CONTRACTOR SHALL BE RESPONSIBLE FOR PERMITS AND ANY CHARGES FOR TIE-IN TO EXISTING STREETS AND UTILITIES. ALL IMPACT FEES, IF ANY, SHALL BE THE CONTRACTOR'S RESPONSIBILITY. THE CONTRACTOR SHALL OBTAIN AND PAY ALL NECESSARY PERMITS, AND AFTER COMPLETION, FURNISH OWNER CERTIFICATIONS OF FINAL INSPECTIONS AND APPROVAL AS ISSUED BY THE INSPECTION DEPARTMENT OF THE PARISH. THE CONTRACTOR SHALL BE RESPONSIBLE FOR OBTAINING ALL NECESSARY CERTIFICATES OF INSPECTION, FROM FEDERAL AND STATE AUTHORITIES BOTH AT ROUGH-IN AND COMPLETION.

18. ALL MATERIALS AND WORK SHALL CONFORM TO ALL GOVERNING CODES, REGULATIONS, AND AGENCIES.

19. ELECTRICAL WORK SHALL COMPLY WITH NFPA AND NATIONAL ELECTRICAL CODE AND BE PERFORMED BY A LICENSED ELECTRICIAN.

20. ALL HVAC SYSTEMS SHALL BE CONSTRUCTED IN ACCORDANCE WITH NFPA 70.

21. DRAFT STOPS SHALL BE INSTALLED AS PER PARISH, STATE, AND NFPA CODES.

22. INSULATION AND INSULATION ASSEMBLIES SHALL MEET THE REQUIREMENTS OF SECTION 720, INTERNATIONAL BUILDING CODE, 2015 EDITION.

23. INTERIOR WALLS AND CEILING SHALL HAVE A FLAME SPREAD OF 0-200 AND A SMOKE DEVELOPMENT RATING OF 0-450.

24. PENETRATIONS THROUGH RATED CONSTRUCTION SHALL BE SEALED BY APPROVED FIRESTOP SYSTEMS OR DEVICES TESTED IN ACCORDANCE WITH ASTM E-814 OR ANSI/UL 1479.

25. CONCEALED INSULATION SHALL HAVE A FLAME SPREAD OF 0- 25 AND A SMOKE DEVELOPMENT FACTOR OF 0-450.

26. REMOVAL AND DISPOSAL OF ALL SUBSTANCES AND MATERIAL IS TO BE ACCOMPLISHED ACCORDING TO SPECIFICATIONS AND FEDERAL, STATE AND LOCAL REGULATIONS.

GENERAL NOTES (CONT.)

27. ALL MATERIALS SHALL BE NEW EXCEPT WHERE OTHERWISE NOTED AND SHALL CONFORM WITH THE STANDARDS OF UNDERWRITER'S LABORATORY IN EVERY CASE WHERE SUCH A STANDARD HAS BEEN ESTABLISHED FOR THE PARTICULAR TYPE OF MATERIAL IN QUESTION. INSTALL ALL MATERIALS AND SYSTEMS IN PROPER RELATION WITH ADJACENT CONSTRUCTION AND WITH UNIFORM APPEARANCE.

28. CONTRACTOR SHALL ANTICIPATE AND MAKE ANY AND ALL ARRANGEMENTS WITH LOCAL GOVERNMENT AGENCIES, SHOULD ENTRY ONTO, OR OBSTRUCTION OF, A PUBLIC WAY BE NECESSARY IN CONNECTION WITH THE WORK.

29. THE CONTRACTOR SHALL PROVIDE ANY SITE DEMOLITION / UTILITY RELOCATION NECESSARY FOR COMPLETION OF WORK.

30. ALL SURVEY INFORMATION HAS BEEN TAKEN FROM A TOPOGRAPHIC SURVEY FURNISHED BY THE OWNER AND IS INCLUDED IN THIS SET FOR THE CONTRACTOR'S CONVENIENCE. THE ARCHITECT TAKES NO RESPONSIBILITY FOR THE ACCURACY OF THE SURVEY.

31. THE CONTRACTOR SHALL PROVIDE ANY SITE DEMOLITION/UTILITY RELOCATION AS NECESSARY FOR COMPLETION OF THE OVERALL SCOPE OF WORK. VERIFY ALL EXISTING UTILITIES AND EXACT LOCATIONS, PRIOR TO PERFORMING ANY WORK. CONTRACTOR SHALL NOTIFY ARCHITECT/ENGINEER IMMEDIATELY REGARDING ANY CONFLICTS WHICH MAY EXIST AT THE SITE AND THAT WHICH IS REPRESENTED IN THE DOCUMENTS. THE REPAIR AND/OR REPLACEMENT OF ANY SYSTEM COMPONENTS SHALL BE THE RESPONSIBILITY OF THE CONTRACTOR, SHOULD THEY BE DAMAGED DURING THE COURSE OF DEMOLITION OR CONSTRUCTION.

32. PRIOR TO ALTERATION, ADDITION OR TIE-IN TO EXISTING FACILITIES/ UTILITIES, ANY DAMAGE BY CONTRACTOR SHALL BE PROPERLY REPAIRED BY THE CONTRACTOR, AT THE CONTRACTOR'S EXPENSE.

33. ALL EXISTING MOISTURE WITHIN STRUCTURES REQUIRING WORK IS TO BE REMOVED PRIOR TO INSTALLING NEW FINISH MATERIALS THROUGH MEANS DESCRIBED IN SPECIFICATION SECTION 015000, PART 3 - EXECUTION OR OTHERWISE, IN ORDER TO MEET MANUFACTURER'S INSTALLATION REQUIREMENTS AND / OR TO ACHIEVE PROPER INSTALLATION.

34. VERIFY LOCATION OF ALL EQUIPMENT WITH ARCHITECT, PRIOR TO INSTALLATION.

35. CONTRACTOR SHALL EXERCISE CARE TO AVOID DAMAGE TO EXISTING WORK, ADJACENT SURFACES, AND ADJOINING AREAS INCLUDING BUT NOT LIMITED TO THE PORTION OF THE WORK THAT IS TO REMAIN AS A PART OF THE COMPLETED CONSTRUCTION. CONTRACTOR SHALL BE REQUIRED TO REPAIR OR OTHERWISE RESTORE ANY SUCH AREAS OR SURFACES THAT BECOME DAMAGED OR REMOVED ON ACCOUNT OF THE DEMOLITION AND/OR CONSTRUCTION WORK.

36. CONTRACTOR SHALL INSTALL MATERIALS AND SYSTEMS IN ACCORDANCE WITH PRODUCT AND MATERIAL MANUFACTURER'S INSTRUCTIONS AND REVIEWED SUBMITTALS.

37. ALL ITEMS NOT SPECIFICALLY NOTED AS OWNER PROVIDED OR OWNER INSTALLED SHALL BE PROVIDED AND INSTALLED BY CONTRACTOR.

38. WORK INDICATED AS "NOT IN CONTRACT", "N.I.C.", OR "BY OTHERS" SHALL BE PERFORMED BY OWNER'S SEPARATE CONTRACTORS. CONTRACTOR SHALL ASSIST IN COORDINATING THE WORK BY SEPARATE CONTRACTORS WITH THE WORK OF THIS CONTRACT.

39. DEMOLITION SHALL BE PERFORMED IN AN ORDERLY SEQUENCE, SCHEDULED BY THE CONTRACTOR AND COORDINATED WITH THE OWNER, SHOULD HAZARDOUS MATERIALS, OR MATERIALS SUSPECTED TO BE HAZARDOUS BE ENCOUNTERED, THE CONTRACTOR SHALL NOT PROCEED AND IMMEDIATELY CALL TO THE ATTENTION OF THE OWNER. ALL HAZARDOUS WASTE SHALL BE CONTAINED, ABATED, REMOVED, AND DISPOSED OF IN ACCORDANCE WITH FEDERAL REGULATIONS, LA.D.E.Q. AND THE OWNER'S ASBESTOS MANAGEMENT PLAN.

40. ALL FLOOR PLAN DIMENSIONS ARE TO THE FACE OF FINISH (FOF) OR TO THE CENTER OF COLUMNS UNLESS STATED OTHERWISE.

41. **NOT USED**

42. **PRIOR TO START OF DEMOLITION/CONSTRUCTION, CONTRACTOR IS TO COORDINATE WITH OWNER/PROJECT REPRESENTATIVE ANY REMAINING ITEMS LOCATED IN BUILDING INTENDED FOR CONTRACTOR REMOVAL/DISPOSAL.**

43. **THE CONTRACTOR SHALL PROVIDE FOR POSITIVE DRAINAGE FROM ALL LOCATIONS OF CONSTRUCTION FOR THE COURSE OF THE CONTRACT.**

44. **FOR ROOF MODIFICATIONS, THE CONTRACTOR SHALL PROVIDE ALL NECESSARY ACCESSORIES AS REQUIRED BY ROOFING MANUFACTURER TO PROVIDE A COMPLETE ROOF CERTIFIABLE BY THE MANUFACTURER.**

45. **NOT USED**

46. **AT ROOF TOP MOUNTED EQUIPMENT AND OTHER OBSTRUCTIONS TO THE DRAINAGE PATTERN OF THE ROOF, PROVIDE TAPERED INSULATION AS REQUIRED TO MAINTAIN 1/4" PER FOOT SLOPE AROUND THE OBSTRUCTION, WHETHER SPECIFICALLY SHOWN ON ROOF PLAN OR NOT.**

47. **PROVIDE MINIMUM 3'-0" WIDE WALKBOARDS AROUND ALL ROOFTOP MOUNTED EQUIPMENT WHICH REQUIRES ACCESS FOR SERVICING AS INDICATED ON THE PLAN OR AS REQUIRED. AS A MINIMUM, PROVIDE WALKSURFACE FROM EQUIPMENT TO ROOF ACCESS POINT.**

48. **NOT USED**

49. **NOT USED**

SYMBOLS

NOTE: ALL OF THE SYMBOLS AND ABBREVIATIONS APPEARING ON THIS SHEET MAY NOT NECESSARILY BE USED ON THIS PROJECT. FOR ADDITIONS TO AND/OR DEVIATIONS FROM THESE STANDARDS, REFER TO THE APPLICABLE DISCIPLINE'S WORK THROUGHOUT THE SET OF DRAWINGS.

0.000	NEW ELEVATION
0.000	EXISTING ELEVATION
A	COLUMN MARK
100' - 0"	LEVEL LINE, CONTROL POINT OR DATUM
	BREAK LINE
101a	ROOM NUMBER
℄	CENTERLINE
FEC	FIRE CABINET AND EXTINGUISHER
1	REVISION NOTE (CLOUDED AREA DENOTES REVISIONS OCCUR IN THIS AREA)
A	WINDOW TAG
A01	MISCELLANEOUS TAG
101a	DOOR TAG
0000	KEYNOTE
0A0	WALL TYPE
1/A011	PHOTO TAG

DRAWING NUMBER / SHEET NUMBER — 1 / A501 — BUILDING SECTION

DRAWING NUMBER / SHEET NUMBER — 1 / A701 — DETAIL SECTION

DRAWING NUMBER / SHEET NUMBER — 1 / A401 — ELEVATION

DRAWING NUMBER / SHEET NUMBER — 1 / A801 / 2 — INTERIOR ELEVATION

NOTE: CONTRACTOR SHALL REVIEW CLOUDED AREA THOROUGHLY TO DETERMINE ALL CHANGES TO THE DOCUMENTS. FAILURE TO ACCOUNT FOR CHANGES THAT AFFECT THE CONTRACTOR `S BID IN THE CLOUDED AREA SHALL NOT BE JUSTIFICATION FOR ADJUSTMENT IN THE CONTRACT SUM.

ABBREVIATIONS

AFF	ABOVE FINISH FLOOR	HM	HOLLOW METAL
ACT	ACOUSTICAL CEILING TILE	INSUL	INSULATED / INSULATION
ADJ	ADJACENT	INT	INTERIOR
ALT	ALTERNATE	MB	MARKER BOARD
ALUM	ALUMINUM	MECH	MECHANICAL
BD	BOARD	MIN	MINIMUM
BFE	BASE FLOOD ELEVATION	MTL	METAL
BO	BOTTOM OF	N/A	NOT APPLICABLE
CJ	CONTROL JOINT	NIC	NOT IN CONTRACT
CMU	CONCRETE MASONRY UNIT	NTS	NOT TO SCALE
CONC	CONCRETE	OC	ON CENTER
CONT	CONTINUOUS	OH	OPPOSITE HAND
CT	CERAMIC TILE	PERM	PERMEABLE
CWFP	CEMENTITIOUS WOOD FIBER PANEL	PL	PLASTIC LAMINATE
		PT	PAINT
DIA	DIAMETER	PTD	PAINTED
DS	DOWNSPOUT	PT PR. TRT'D	PRESSURE TREATED
DF	DRINKING FOUNTAIN	RB	RESILIENT BASE
DFE	DESIGN FLOOD ELEVATION	RE	REFER
EA	EACH	REQ'D	REQUIRED
ELEV	ELEVATION	RO	ROUGH OPENING
EJ	EXPANSION JOINT	SB	SMART BOARD
EOS	EDGE OF SLAB	SCW	SOLID CORE WOOD
EQ	EQUAL	SIM	SIMILAR
EXIST	EXISTING	SS	STAINLESS STEEL
EXP	EXPANSION	TB	TACK BOARD
EXT	EXTERIOR	TBD	TO BE DETERMINED
EWC	ELECTRIC WATER COOLER	TO	TOP OF
FF	FINISH FLOOR	TS	TACK STRIP
FE	FIRE EXTINGUISHER	TYP	TYPICAL
FEC	FIRE EXTINGUISHER CABINET	UNO	UNLESS NOTED OTHERWISE
FOF	FACE OF FINISH	VCT	VINYL COMPOSITE TILE
FOS	FACE OF STUD	VERT	VERTICAL
GA	GAUGE	VIF	VERIFY IN FIELD
GALV	GALVANIZED	VPAB	VAPOR PERMEABLE AIR BARRIER
GC	GENERAL CONTRACTOR		
GYP	GYPSUM	WB	WOOD BASE
HC	HANDICAPPED	WD	WOOD
HORZ	HORIZONTAL	WWF	WELDED WIRE FABRIC

HOLLY & SMITH ARCHITECTS
HAMMOND
T 985.345.5210
NEW ORLEANS
T 504.585.1315
www.hollyandsmith.com

ROOF REPLACEMENT
SECTION B
UNO Engineering Building
2000 Lakeshore Drive, New Orleans, LA 70148

KEVIN J. MORRIS No. 5598 STATE OF LOUISIANA REGISTERED ARCHITECT

DESCRIPTION	DATE

PROJECT NO.	21023
PHASE	CD
DATE	07.19.21
PROJECT MANAGER	RS
QUALITY CONTROL	

This drawing, as an instrument of service, is and shall remain the property of the architect and shall not be reproduced, published, or used in any way without the permission of the architect.
© copyright Holly & Smith Architects, APAC

BID DOCUMENTS

G101

GENERAL INFO

H/S

PLOTTED: Jul 19, 2021 9:08am BY: john
XREFS: 21023 TB 24X36 MODIFIED: Jul 19, 2021 9:08am
FILE INFO: P:\21023 UNO Engineering Roof Rplcmt\Drawings\CAD\21023- G101 - GENERAL INFO.dwg

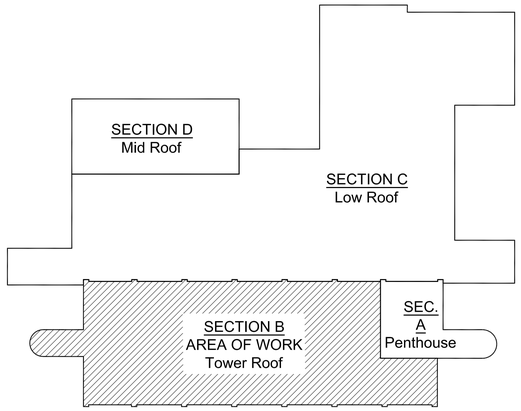

1 ROOF SECTION DIAGRAM

SCALE: N.T.S.

NORTH

VIDEO SCOPE OF ROOF DRAINS:
BEFORE START OF DEMOLITION GC SHALL VIDEO SCOPE ALL ROOF DRAIN LINES FROM ROOF INLET DOWN TO CONNECTION TO SUBSURFACE STORM DRAIN LINE & OUT TO 6' PAST BUILDING EDGE. GC SHALL PROVIDE THE VIDEO IN ELECTRONIC FORMAT TO OWNER FOR THEIR RECORD.

EXISTING / DEMO GENERAL NOTES:

A. GC SHALL COORDINATE ALL WORK PROCESSES AND SCHEDULE WITH THE OWNER AND ALL SERVICE PROVIDERS THAT HAVE EQUIPMENT ON THE ROOF. ***WORKING CLOSE TO THE FRONT OF THE ANTENNA ARRAYS CAN BE DANGEROUS*** AND THEY MUST BE TURNED OFF WHEN WORKERS ARE PRESENT. OTHER ROOF MOUNTED EQUIPMENT MAY BE SHUT DOWN FOR SHORT PERIODS WITH THE COORDINATION OF THE OWNER
B. INTENT OF THE DEMOLITION PHASE IS FOR THE GC TO PREPARE THE EXISTING ROOF AREA FOR THE INSTALLATION OF A NEW BUILT-UP ROOF SYSTEM WITH ALL NECESSARY ACCESSORIES, FLASHING, COUNTER FLASHING, ETC.
C. GC SHALL PROPERLY DISPOSE OF ALL ITEMS INDICATED TO BE DEMO'D.
D. IN ADDITION TO ALL ROOFING ITEMS INDICATED, GC SHALL REMOVE & PROPERLY DISPOSE OF ALL MISCELLANEOUS DISCARDED / ABANDONED ITEMS ON THE ROOF. THESE INCLUDE BUT ARE NOT LIMITED TO GENERAL TRASH, ABANDONED HVAC COMPRESSORS & PLUMBING PARTS, ETC.
E. GC SHALL CLEAN & PREPARE ALL ITEMS INDICATED TO REMAIN SO THAT THEY ARE READY TO RECEIVE THE NEW ROOF & FLASHING PER EACH COMPONENT'S MANUF. RECOMMENDATION..
F. GC SHALL TEMPORARILY MODIFY THE LIGHTING PROTECTION CABLING SPREAD ACROSS THE ROOF AND THE SPIKES ATTACHED TO THE PARAPET WALL TO ALLOW INSTALLATION OF THE NEW ROOF SYSTEM.
G. NO EQUIPMENT OR MATERIALS CAN BE BROUGHT THROUGH THE BUILDING. ALL DEBRIS MUST BE REMOVED ON THE EXTERIOR OF THE BUILDING. THERE IS LIMITED ACCESS FOR PERSONNEL VIA THE STAIR & PENTHOUSE ON THE EAST SIDE OF THE BUILDING - ELEVATORS ARE NOT TO BE USED AT ANY TIME.
H. LAYOUT / STAGING AREA WILL BE AVAILABLE ON THE SOUTH SIDE OF THE BUILDING. COORDINATE ACCESS, PARKING AVAILABILITY AND AREA LIMITS WITH THE OWNER.
I. GC SHALL PROTECT ALL ROOF DRAINS TO PREVENT DEBRIS FROM ENTERING PIPING.

EXISTING / DEMO KEYNOTES:

1. BUILT-UP ROOF WITH +/- 6" OF ISO INSULATION BOARD & GRAVEL BALLAST. DEMO & REMOVE COMPLETELY DOWN TO EXISTING CONCRETE STRUCTURAL DECK.
2. ROOF AREA PREVIOUSLY PATCHED W/ BUILT-UP ROOFING & INSULATION. DEMO & REMOVE COMPLETELY DOWN TO EXISTING CONCRETE STRUCTURAL DECK.
3. CANT STRIP & METAL COUNTER FLASHING ALONG PERIMETER OF ROOF AT PARAPET & PENTHOUSE. DEMO & REMOVE COMPLETELY. EXIST. BACKER BOARD ON PARAPET LOCATED BETWEEN ROOF AND COUNTER FLASHING TO REMAIN.
4. PRE-CAST CONC. PARAPET WALL WITH FLUID APPLIED WATERPROOFING SYSTEM OVER BACKER BOARD ON BACK SIDE TO REMAIN. SEE ALTERNATE NO 1 FOR ADDITIONAL WORK.
5. STAINLESS STEEL PARAPET CAP FLASHING OVER WOOD NAILER TO REMAIN. SEE ALTERNATE NO. 1 FOR ADDITIONAL WORK.
6. ENLARGE EXISTING OVERFLOW SCUPPER. REMOVE ALL ROOFING & FLASHING IN PREPARATION FOR REUSE.
7. ROOF DRAIN. REMOVE DRAIN, STRAINER, FLASHING, ETC IN PREPARATION FOR THE INSTALLATION OF A NEW DRAIN AT THE SAME LOCATION.
8. VENT THRU ROOF TO REMAIN. REMOVE FLASHING & PREPARE FOR INSTALLATION OF NEW ROOF.
9. ROOFING VENT. DEMO & REMOVE. VIF & CONFIRM WITH OWNER THAT VENT IS NOT CONNECTED TO ANY UTILITIES - IF VENT IS CONNECTED TO BLDG UTILITIES DO NOT DEMO.
10. ANTENNA ARRAY ELEVATED ON GALV. STEEL FRAME WITH 4 PIPE COLUMN SUPPORTS THRU ROOF TO STRUCTURE - ALL TO REMAIN. **COORDINATE IN ADVANCE W/ OWNER AND SERVICE PROVIDER WHEN WORKING AROUND ANTENNA ARRAY.**
11. EQUIPMENT ELEVATED ON STEEL FRAME TO REMAIN.
12. SERVICE PROVIDER SHALL TEMPORARILY REMOVE LADDER TO ALLOW INSTALLATION OF ROOF. GC SHALL COORDINATE SCHEDULE IN ADVANCE W/ OWNER AND SERVICE PROVIDER.
13. ELEVATED CABLE RACE WAY / CONDUIT SUPPORT TO REMAIN.
14. STEEL PIPE SUPPORT FOR EQUIPMENT PLATFORM / RACEWAY TO REMAIN.
15. STEEL PIPE SUPPORT FOR EQUIPMENT PLATFORM / RACEWAY IN PITCH POCKET. PIPE SUPPORT TO REMAIN, DEMO & REMOVE PITCH POCKET.
16. LIGHTNING PROTECTION SYSTEM CONNECTION PENETRATING THE ROOF IN A PITCH POCKET. TEMPORARILY REMOVE TO ALLOW THE INSTALLATION OF ROOF & FLASHING. DEMO & REMOVE ANY PITCH POCKETS IN PREPARATION FOR A COWL IN THE SAME LOCATION.
17. ELECTRICAL CABLE / CONDUIT PENETRATING THE ROOF IN A PITCH POCKET. TEMPORARILY DISCONNECT ELECTRICAL FOR THE DEMO & REMOVAL OF THE PITCH POCKET IN PREPARATION FOR THE INSTALLATION OF A COWL IN THE SAME LOCATION.
18. HVAC CONDENSING UNIT ON GALV. STEEL PLATFORM WITH CONDENSATE PIPING PENETRATING THE ROOF IN A PITCH POCKET. DEMO & REMOVE IN THEIR ENTIRETY.
19. GUY WIRE SUPPORT PENETRATING THE ROOF THRU A PITCH POCKET. TEMPORARILY REMOVE STACKS & GUY WIRES FOR THE DEMO & REMOVAL OF THE PITCH POCKET IN PREPARATION FOR THE INSTALLATION OF A NEW SUPPORT IN THE SAME LOCATION.
20. VENT FAN ON CURB. TEMPORARILY REMOVE THE FAN IN PREPARATION FOR THE ADDITION OF ADDITIONAL PR. TRT'D CURB TOP AND REINSTALLATION OF THE FAN ON THE SAME CURB.
21. FIRE DEPARTMENT STANDPIPE CONNECTION IN PITCH POCKET. PIPING TO REMAIN. DEMO & REMOVE PITCH POCKET.
22. DEMO & REMOVE ABANDONED PITCH POCKET & ANY ASSOCIATED WIRING, PIPING, CONDUIT, ETC.
23. DEMO & REMOVE ABANDONED CURB IN PREPARATION FOR FILLING OPENING WITH NEW FRAMING & INSTALLING NEW ROOF.
24. CUT OPENING IN PARAPET WALL FOR NEW OVERFLOW SCUPPER. MATCH SIZE OF THE ENLARGED EXIST. SCUPPER OPENING.
25. DEMO & REMOVE WOOD STEP LANDING

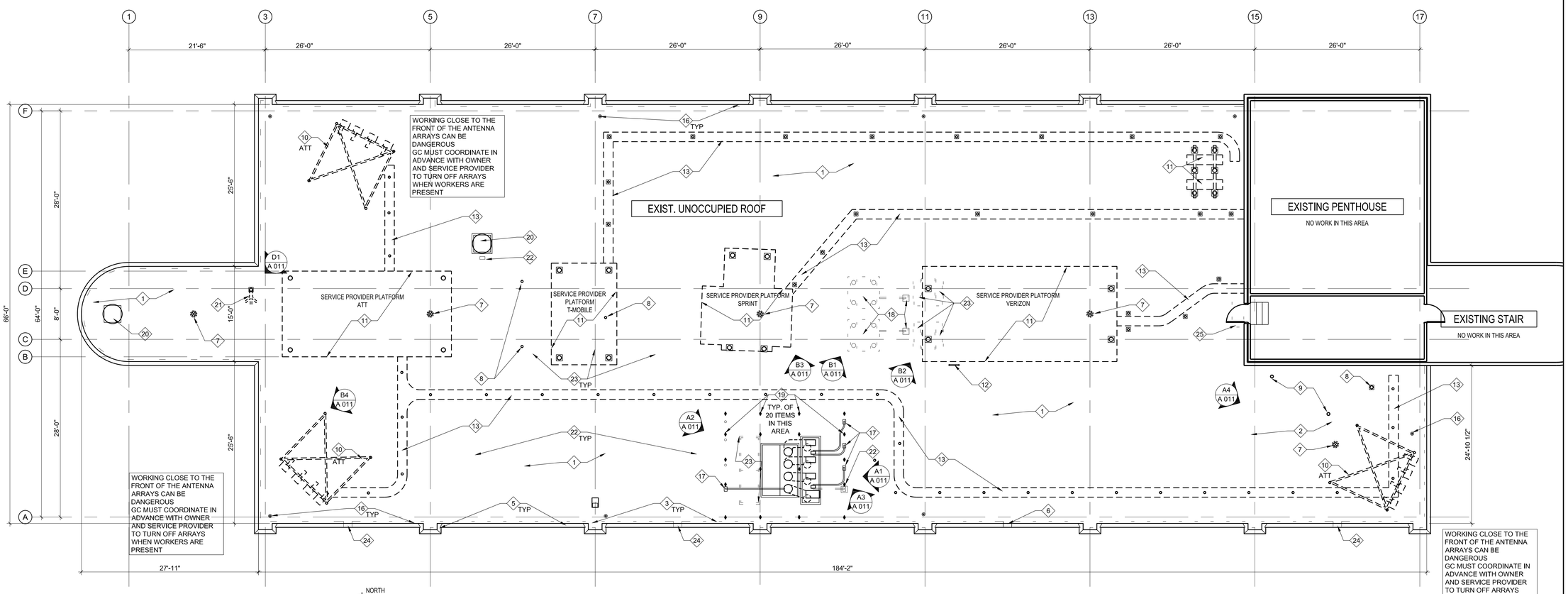

2 EXISTING / DEMO ROOF PLAN

SCALE: 1/8" = 1'-0"

0 8' 16'

NORTH

HOLLY & SMITH ARCHITECTS
HAMMOND
T 985.345.5210
NEW ORLEANS
T 504.585.1315
www.hollyandsmith.com

ROOF REPLACEMENT
SECTION B
UNO Engineering Building
2000 Lakeshore Drive, New Orleans, LA 70148

KEVIN J. MORRIS
No. 5588
STATE OF LOUISIANA
REGISTERED ARCHITECT

DESCRIPTION	DATE

PROJECT NO.	21023
PHASE	CD
DATE	07.19.21
PROJECT MANAGER	RS
QUALITY CONTROL	

This drawing, as an instrument of service, is and shall remain the property of the architect and shall not be reproduced, published, or used in any way without the permission of the architect.
© copyright Holly & Smith Architects, APAC

BID DOCUMENTS

A 001

ROOF PLAN

H/S

FILE INFO: P:\21023 UNO Engineering Roof Rplcmt\Drawings\CAD\21023- A001 - EXIST ROOF PLAN.dwg MODIFIED: Jul 19, 2021 8:37am XREFS: 21023 TB 24X36; 21023-XPLAN PLOTTED: Jul 19, 2021 8:38am BY: john

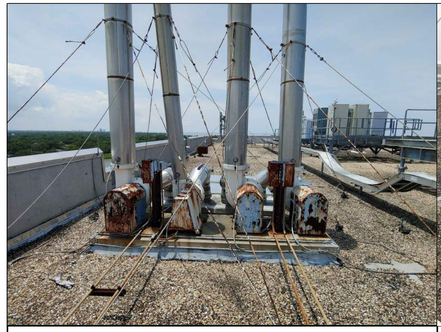

A1 FUME HOOD VENTS
SCALE: N.T.S.

A2 FUME HOOD VENTS
SCALE: N.T.S.

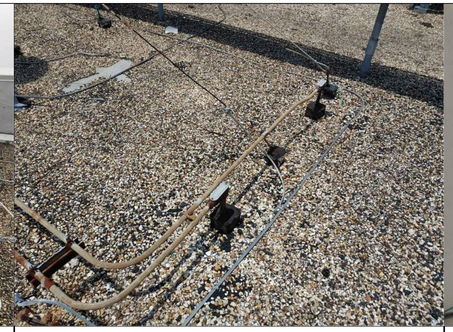

A3 PITCH POCKETS
SCALE: N.T.S.

A4 ANTENNA ARRAY
SCALE: N.T.S.

EXISTING / DEMO GENERAL NOTES:

A. GC SHALL COORDINATE ALL WORK PROCESSES AND SCHEDULE WITH THE OWNER AND ALL SERVICE PROVIDERS THAT HAVE EQUIPMENT ON THE ROOF. ***WORKING CLOSE TO THE FRONT OF THE ANTENNA ARRAYS CAN BE DANGEROUS*** AND THEY MUST BE TURNED OFF WHEN WORKERS ARE PRESENT. OTHER ROOF MOUNTED EQUIPMENT MAY BE SHUT DOWN FOR SHORT PERIODS WITH THE COORDINATION OF THE OWNER
B. INTENT OF THE DEMOLITION PHASE IS FOR THE GC TO PREPARE THE EXISTING ROOF AREA FOR THE INSTALLATION OF A NEW BUILT-UP ROOF SYSTEM WITH ALL NECESSARY ACCESSORIES, FLASHING, COUNTER FLASHING, ETC.
C. GC SHALL PROPERLY DISPOSE OF ALL ITEMS INDICATED TO BE DEMO'D.
D. IN ADDITION TO ALL ROOFING ITEMS INDICATED, GC SHALL REMOVE & PROPERLY DISPOSE OF ALL MISCELLANEOUS DISCARDED / ABANDONED ITEMS ON THE ROOF. THESE INCLUDE BUT ARE NOT LIMITED TO GENERAL TRASH, ABANDONED HVAC COMPRESSORS & PLUMBING PARTS, ETC.
E. GC SHALL CLEAN & PREPARE ALL ITEMS INDICATED TO REMAIN SO THAT THEY ARE READY TO RECEIVE THE NEW ROOF & FLASHING PER EACH COMPONENT'S MANUF. RECOMMENDATION..
F. GC SHALL TEMPORARILY MODIFY THE LIGHTING PROTECTION CABLING SPREAD ACROSS THE ROOF AND THE SPIKES ATTACHED TO THE PARAPET WALL TO ALLOW INSTALLATION OF THE NEW ROOF SYSTEM.
G. NO EQUIPMENT OR MATERIALS CAN BE BROUGHT THROUGH THE BUILDING. ALL DEBRIS MUST BE REMOVED ON THE EXTERIOR OF THE BUILDING. THERE IS LIMITED ACCESS FOR PERSONNEL VIA THE STAIR & PENTHOUSE ON THE EAST SIDE OF THE BUILDING - ELEVATORS ARE NOT TO BE USED AT ANY TIME.
H. LAYOUT / STAGING AREA WILL BE AVAILABLE ON THE SOUTH SIDE OF THE BUILDING. COORDINATE ACCESS, PARKING AVAILABILITY AND AREA LIMITS WITH THE OWNER.
I. GC SHALL PROTECT ALL ROOF DRAINS TO PREVENT DEBRIS FROM ENTERING PIPING.

B1 EQUIPMENT PLATFORM
SCALE: N.T.S.

B2 EQUIP PLATFORM & CURB
SCALE: N.T.S.

B3 EQUIPMENT PLATFORM
SCALE: N.T.S.

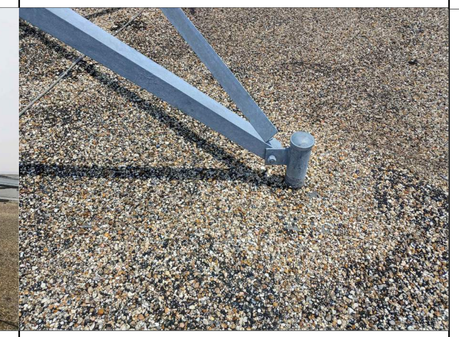

B4 ANTENNA ARRAY BASE
SCALE: N.T.S.

C1 PARAPET
SCALE: N.T.S.

C2 PARAPET
SCALE: N.T.S.

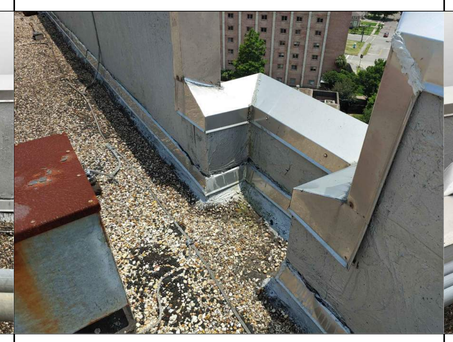

C3 PARAPET
SCALE: N.T.S.

C4 RACEWAY & SUPPORT POSTS
SCALE: N.T.S.

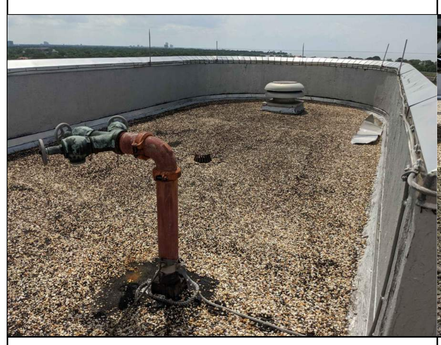

D1 WEST STAIR ROOF
SCALE: N.T.S.

D2 VENT THRU ROOF
SCALE: N.T.S.

D3 VENT FAN & CURB
SCALE: N.T.S.

D4 ROOF DRAIN
SCALE: N.T.S.

HOLLY & SMITH ARCHITECTS
HAMMOND
T 985.345.5210
NEW ORLEANS
T 504.585.1315
www.hollyandsmith.com

ROOF REPLACEMENT
SECTION B
UNO Engineering Building
2000 Lakeshore Drive, New Orleans, LA 70148

KEVIN J. MORRIS No. 5588 STATE OF LOUISIANA REGISTERED ARCHITECT

DESCRIPTION	DATE

PROJECT NO.	21023
PHASE	CD
DATE	07.19.21
PROJECT MANAGER	RS
QUALITY CONTROL	

This drawing, as an instrument of service, is and shall remain the property of the architect and shall not be reproduced, published, or used in any way without the permission of the architect.
© copyright Holly & Smith Architects, APAC

BID DOCUMENTS

A 011

EXISTING CONDITIONS PHOTOS

S/H

PLOTTED: Jul 19, 2021 9:36am BY: john
MODIFIED: Jul 19, 2021 9:33am
XREFS: 21023 TB 24X36; 21023-A001 - EXIST ROOF PLAN; 21023-XPLAN
FILE INFO: P:\21023 UNO Engineering Roof Rplcmt\Drawings\CAD\21023-A011 - EXIST PHOTOS.dwg

ROOF SLOPE LEGEND

+6 1/2" — ELEVATION MARK W/ BOX DIMENSION NOTES TOP OF INSULATION HEIGHT ABOVE EXISTING ROOF DECK, UNLESS NOTED OTHERWISE

0" EXIST — ELEVATION MARK W/O BOX DIMENSION NOTES TOP OF EXISTING CONDITION REFERENCED.

SLOPE DN +/-3/16:12 — SLOPE MARK INDICATES DIRECTION & APPROX. SLOPE OF ROOF DOWN TO DRAIN OR SCUPPER BASED ON NOTED INSULATION ELEVATIONS

GENERAL NOTES:

A. GC SHALL COORDINATE ALL WORK AND SCHEDULE WITH THE OWNER AND ALL SERVICE PROVIDERS OPERATING EQUIPMENT ON THE ROOF. ***WORKING CLOSE TO THE FRONT OF THE ANTENNA ARRAYS CAN BE DANGEROUS*** AND THEY MUST BE TURNED OFF WHEN WORKERS ARE PRESENT. OTHER ROOF MOUNTED EQUIPMENT MAY BE SHUT DOWN FOR SHORT PERIODS WITH THE COORDINATION OF THE OWNER & SERVICE PROVIDERS.
B. INTENT OF THE ROOF REPLACEMENT PHASE IS FOR THE GC TO INSTALL INSULATION, ROOFING AND ALL NECESSARY ACCESSORIES, FLASHING, COUNTER FLASHING, ETC. TO PROVIDE A COMPLETE, WEATHERPROOF ROOF SYSTEM. SEE ADD ALTERNATES NO 1 & 2 FOR ADDITIONAL WORK OF REPLACING WATERPROOFING AND COPING ON THE PARAPET WALL AND ADDING A BASE WATERPROOFING LAYER UNDER THE TAPERED INSULATION.
C. NO EQUIPMENT OR MATERIALS CAN BE BROUGHT THROUGH THE BUILDING. ALL NEW MATERIALS MUST BE BROUGHT TO THE ROOF ON THE EXTERIOR OF THE BUILDING. THERE IS LIMITED ACCESS FOR PERSONNEL VIA THE STAIR & PENTHOUSE ON THE EAST SIDE OF THE BUILDING - BUILDING ELEVATORS ARE NOT TO BE USED AT ANY TIME.
D. LAYOUT / STAGING AREA WILL BE AVAILABLE ON THE SOUTH SIDE OF THE BUILDING. COORDINATE ACCESS, PARKING AVAILABILITY AND AREA LIMITS WITH THE OWNER.
E. GC SHALL MODIFY THE LIGHTNING PROTECTION CABLING SPREAD ACROSS THE ROOF TO ALLOW INSTALLATION OF THE NEW ROOF SYSTEM. THERE ARE MANY CABLE ANCHOR LOCATIONS NOT SHOWN ON THE DRAWINGS. GC SHALL VERIFY CONDITIONS PRIOR TO BIDDING. GC SHALL REMOVE AND REINSTALL ALL CABLING AND ANCHOR LOCATIONS TO ALLOW THE PROPER INSTALLATION OF THE NEW ROOF. ANCHOR LOCATIONS SHALL BE INSTALLED OVER ROOF PROTECTION PADS AND SHALL NOT VOID THE ROOF WARRANTY. USE A LIGHTNING PROTECTION SPECIALIST TO ENSURE COMPLIANCE WITH UL, NFPA, NEC AND ALL OTHER APPLICABLE LOCAL, STATE & NATIONAL CODES. COORD. WITH OWNER FOR ANY INSURANCE REQUIREMENTS.
F. GC SHALL ENSURE THAT ALL EQUIPMENT MODIFIED FOR THE ROOF WORK IS RETURNED TO THE SAME WORKING CONDITION IT WAS IN PRIOR TO START OF WORK. COORD. WITH THE OWNER TO RESTART ALL IMPACTED ITEMS. THIS INCLUDES:
F.1. PROPERLY DISCHARGING, CAPTURING REFRIGERANT & RECHARGING ANY HVAC EQUIPMENT WITH WORK TO REFRIGERANT LINES.
F.2. PROPERLY RECONNECTING ELECTRICAL EQUIPMENT WHERE SWITCHES, WIRING, LIGHTNING PROTECTION, GROUNDING, ETC. IS IMPACTED.
G. GC SHALL RETURN ALL ITEMS NOTED TO BE TEMPORARILY REMOVED BACK TO THE CONDITION THEY WERE IN PRIOR TO THE START OF WORK.
H. GC SHALL COMPLETELY REMOVE AND LEGALLY DISPOSE OF ALL ITEMS NOTED AS SUCH AND PATCH OPENINGS IN ROOF DECK. LEAVING A CLEAN SURFACE READY FOR ROOF SYSTEM INSTALLATION. TERMINATE & CAP ANY UTILITIES BELOW THE ROOF DECK WITHOUT IMPACTING ANY OTHER ITEMS CONNECTED TO THE SAME UTILITY LINE. PROPERLY DISCHARGE, CAPTURE & DISPOSE OF ANY REFRIGERANT.
I. GC SHALL PROVIDE MINOR MODIFICATIONS TO THE DUCTS AT THE EXHAUST FANS IF THE TOP OF THE FAN CURB MUST BE RAISED TO MEET FLASHING CLEARANCES CALLED FOR IN THE DRAWINGS / SPECS.

ROOF PLAN KEYNOTES:

1. 2-PLY SBS ROOF ON TAPERED INSULATION. SEE ALTERNATE NO 2.
2. LINE OF RIDGE OR VALLEY IN ROOF.
3. SLOPE ROOF DOWN TO DRAIN OR SCUPPER.
4. BASE BID: EXIST. FLASHING & COUNTERFL. TO REMAIN AT POINT WHERE PARAPET WALL MEETS PENTHOUSE. ALTERNATE NO . 1: REMOVE & REPLACE FLASHING & COUNTERFL. NEW FLASHING SHALL BE REINF. LIQUID FLASH ALONG VERT. PARAPET WALL - EXTEND MIN. 4" + 4" ON PENTHOUSE WALL. PARAPET WALL CAP / COPING FLASH SHALL BE TURNED UP PENTHOUSE WALL 4" AND TIED INTO ST. STEEL RECEIVER / COUNTERFL. SIM. TO DETAIL C1/A911.
5. EXIST. WATERPROOFING AND BACKER BOARD ON BACK SIDE OF PARAPET WALL TO REMAIN IN BASE BID. SEE ALTERNATE NO 1 FOR ADDITIONAL WORK.
6. SAND / SCRAPE & CLEAN EXIST. FAN HOUSINGS IN PREPARATION FOR PAINTING. PAINT WITH HIGH ZINC CONTENT EXTERIOR METAL PRIMER AND TWO FINISH COATS OF EXTERIOR ENAMEL FOR METALS THAT IS COMPATIBLE WITH THE PRIMER. FINISH COATS SHALL BE WHITE, SIM. TO EXIST.
7. GALV. 1/2" EYEBOLTS ON GALV. PIPE ANCHORED TO ROOF. PROVIDE 3/16" DIA. STAINLESS STEEL CABLE (1X7 WSC SS304) WITH SAFETY YELLOW VINYL COATING, FIELD LOOPED ON BOTH ENDS, PROPERLY SWAGGED & SLEEVED. 1/4" STAINLESS STEEL TURNBUCKLE WITH HOOK & EYE ENDS, MIN. 5" LONG. 4 EYEBOLTS & 4 CABLES, ARRANGED EQUALLY AROUND THE STACK, SHALL BE RUN TO EACH STACK. .
8. EXIST. CURB & DUCT PENETRATION THRU ROOF. TEMPORARILY REMOVE DUCT & ST. STEEL COVER / FLASHING AS NECESS. TO REPLACE ROOF FLASHING - REINSTALL AFTER REWORKING CURB FLASHING.
9. EXIST. CURB W/ CONC. TOP & FAN EQUIPMENT. TEMPORARILY REMOVE CURB COUNTERFLASHING TO INSTALL CURB FLASHING. REINSTALL COUNTERFLASHING ON EXISTING CURB WITH NEW SEALANT AND GASKETED FASTENERS AFTER REWORKING CURB FLASHING. CLEAN, PREP, PRIME & PAINT TOP SURFACE OF CONC WITH EXTERIOR PAINT & PRIMER SUITABLE FOR CONC. NOTE: EQUIPMENT DOES NOT HAVE TO BE REMOVED FOR PAINTING.
10. REPLACE EXIST. METAL BOX ENCLOSURE W/ SIM. ENCLOSURE FABRICATED FROM PREFIN. ALUM. ANCHOR TO NEW ST. STEEL CURB AROUND EXIST. UTILITY LINES. SIM TO DETAIL A4/A911.
11. PREFIN. ALUM. COWL & ST. STEEL CURB AT LOCATION OF DEMO'D PITCH POCKET. TEMP. DISCONNECT ELECT. LINES AS NECESS & RECONNECT AFTER INSTALLING COWL. REPLACE WIRING AS NECESS. TO PROVIDE ANY ADDITIONAL LENGTH NECESS. REPLACE ALL CONDUIT ABOVE ROOF LINE.
12. PROVIDE & INSTALL ROOF DRAIN ASSEMBLY - COATED CAST IRON BODY; LARGE, SLOTTED, LOCKING, POLYPRO DOME STRAINER; NON-PUNCTURING, COMPRESSION CLAMP RING ADD EXTRA WIDE FLANGE & ADJ. EXTENSION AS NECESS. TO WORK WITH EXIST. CONDITIONS; BY JOSAM OR EQ. - AFTER REMOVAL OF EXIST. DRAIN. INCLUDE RECESSED SUMP AREA AROUND DRAIN. FLASH TO ROOF & TIE INTO EXIST. PLUMBING LINES. PROVIDE FULL ROOF DRAIN ASSEMBLIES, NO RETROFIT SYSTEMS SHALL BE USED. SEE DETAILS B1 & B2/A911.
13. TEMPORARILY REMOVE EXIST. FAN ON CURB TO INSTALL ROOF AND FLASHING. REINSTALL FAN HOUSING. ADD PR. TRT'D 2X BLOCKING TO PROVIDE MIN. 8" BETWEEN TOP OF ROOFING AND TOP OF CURB. MODIFY EXIST. DUCT IF NECESS. SEE DETAILS A1 & A2/A911.
14. EXIST. PIPE SUPPORT TO REMAIN AFTER REMOVAL OF PITCH POCKET OR EXIST. FLASHING. FLASH IN TO REPLACEMENT ROOFING. TYP. ALONG RACEWAY RUN OR PLATFORM. SEE DTL A3/A911.
15. EXISTING LIGHTNING PROTECTION SPIKES & BASES INSTALLED THRU THE EXIST. COPING TO REMAIN IN BASE BID. THIS OCCURS AT MANY LOCATIONS, GC TO VERIFY CONDITIONS. SEE ALTERNATE NO 1.
16. TEMP. REMOVE EXIST. LIGHTNING PROTECTION TIE-DOWN ON ROOF. REINSTALL ON ROOF PROTECTION PAD AFTER ROOF REPLACEMENT. THIS CONDITION OCCURS AT MANY LOCATIONS AROUND ROOF, GC TO VERIFY CONDITIONS.
17. REWORK LIGHTNING PROTECTION PENETRATION THRU ROOF TO PROVIDE COWL FLASHED IN TO ROOF. MODIFY OR REPLACE CABLING AS NECESS. TO PROVIDE ANY ADD'L LENGTH REQ'D.
18. REPLACE LEAD FLASHING & FLASH VENT THRU ROOF INTO REPLACEMENT ROOFING. EXTEND PIPE AS NECESS. TO MEET MIN. FLASHING DIMENSIONS CALLED FOR IN THE DETAILS & SPECS. SEE DETAILS B3 & B4/A911.
19. REWORK FLASHING AROUND PIPE & PROVIDE / INSTALL RAIN COLLAR SIMILAR TO TYP. PIPE PENETRATION DETAIL A3/A911.
20. OWNER OR SERVICE PROVIDER SHALL TEMPORARILY REMOVE LADDER TO ALLOW ROOF REPLACEMENT AND REINSTALL AFTER ROOF WORK IS COMPLETE. GC TO COORDINATE SCHEDULE.
21. REWORK FLASHING ON EXIST. GALV. PIPE SUPPORT AT EXIST. EQUIPMENT PLATFORM & TIE IN TO REPLACEMENT ROOFING. SEE DETAIL A3/A911.
22. ROOF PROTECTION PAD, TO MATCH ROOFING SYSTEM. INSTALL PER ROOF MANUF. RECOMMENDATIONS. PROVIDE LAYOUT AS SHOWN AS WELL AS UNDER FREESTANDING PIPE / CONDUIT SUPPORTS & UNDER LIGHTNING PROTECTION ANCHORS. PROVIDE AN ADDITIONAL 50 LINEAR FEET OF PAD TO BE INSTALLED BY GC AT THE OWNER'S DIRECTION.
23. PROVIDE & INSTALL ADHESIVE ATTACHED 1/2" CEMENT BOARD & ST. STEEL. COUNTER FLASHING W/ TERMINAL BAR AROUND BASE OF PENTHOUSE TO ALLOW THE INSTALLATION OF THE REPLACEMENT ROOF & FLASHING.
24. EXISTING COPING, CAP FLASH, ETC. AROUND PARAPET WALL TO REMAIN. SEE ALTERNATE NO 1 FOR REPLACEMENT.
25. COLD FORMED, GALV. JOISTS & TRACK AND CEMENT BOARD FILL TO CLOSE OPENING IN ROOF DECK LEFT BY REMOVAL OF ABANDONED CURB. SEE DETAIL A3/A912
26. FILL HOLE IN ROOF DECK LEFT BY REMOVAL OF ABANDONED PITCH POCKET AND UTILITY LINE WITH 3-PART EPOXY MORTAR PATCH OR NON-SHRINK GROUT. PROTECT INTERIOR OF BLDG AND FILL SOLID FROM ABOVE TO A POINT LEVEL WITH EXIST. TOP OF ROOF DECK. FOLLOW MANUF. RECOMMENDATIONS FOR CURING / DRYING BEFORE INSTALLING ROOF MEMBRANE.
27. EXIST. OVERFLOW SCUPPER. REWORK OPENING SIZE, REPLACE SHEET MTL FLASHING AND TIE IN TO NEW ROOF. SEE DETAILS C1 & C2/A912
28. OVERFLOW SCUPPER. CUT OPENING INTO EXIST. CONC. PARAPET WALL, PROVIDE & INSTALL ST. STEEL FLASHING AND TIE IN TO NEW ROOF. SEE DETAILS C1 & C2/A912
29. 5' X 4' LANDING WITH GALV. STEEL GRATING PLATFORM ON PIPE SUPPORTS ANCHORED TO EXIST. ROOF DECK TO RESIST WIND UPLIFT. FLASH POSTS INTO ROOF. PROVIDE & INSTALL BY GC VIA DELEGATED DESIGN BY LA. LICENSED ENGINEER.
30. NON-PENETRATING PIPING / CONDUIT SUPPORT.
31. CRICKET TO DIRECT WATER RUNOFF AROUND OBSTRUCTION - TYP. AT ALL CONDITIONS WHETHER SHOWN OR NOT

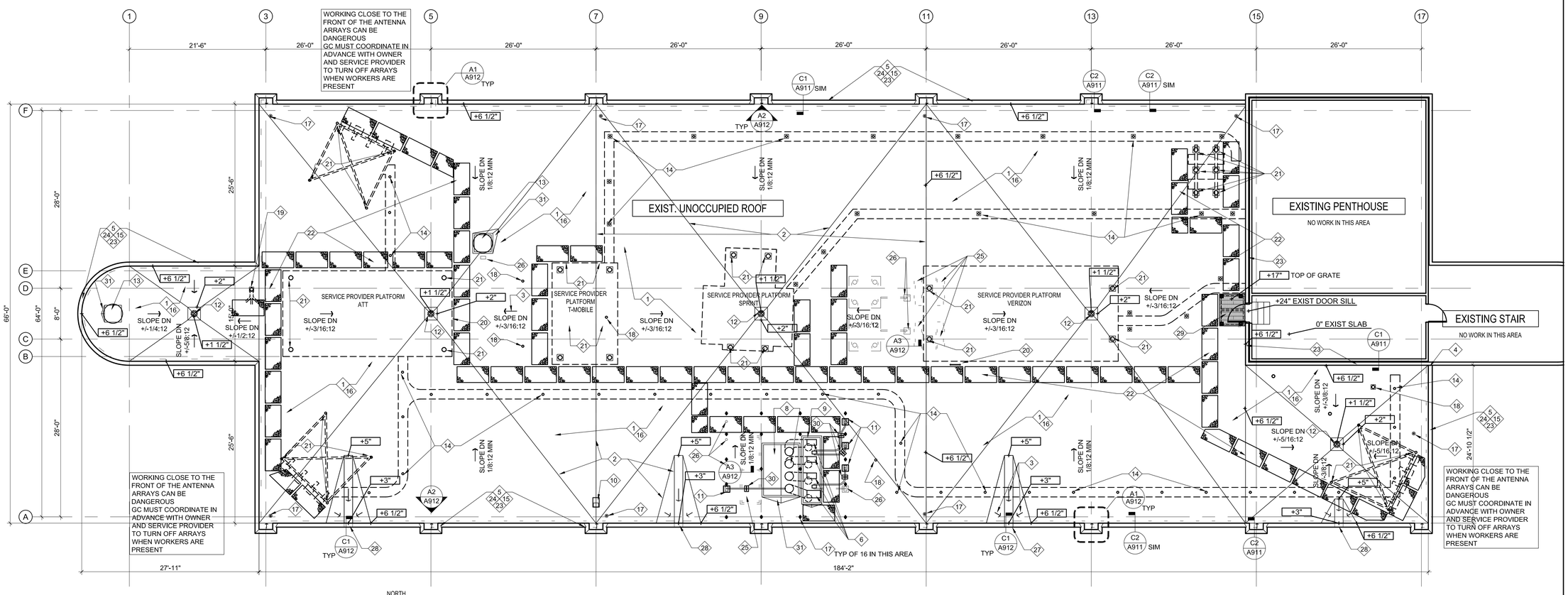

2 ROOF PLAN

SCALE: 1/8" = 1'-0"

HOLLY & SMITH ARCHITECTS

HAMMOND
T 985.345.5210
NEW ORLEANS
T 504.585.1315

www.hollyandsmith.com

ROOF REPLACEMENT
SECTION B
UNO Engineering Building
2000 Lakeshore Drive, New Orleans, LA 70148

KEVIN J. MORRIS No. 5588 STATE OF LOUISIANA REGISTERED ARCHITECT

DESCRIPTION	DATE

PROJECT NO.	21023
PHASE	CD
DATE	07.19.21
PROJECT MANAGER	RS
QUALITY CONTROL	

This drawing, as an instrument of service, is and shall remain the property of the architect and shall not be reproduced, published, or used in any way without the permission of the architect.
© copyright Holly & Smith Architects, APAC

BID DOCUMENTS

A 901

ROOF PLAN

H/S

PLOTTED: Jul 19, 2021 8:56am BY: john
MODIFIED: Jul 19, 2021 8:54am
XREFS: 21023 TB 24X36; 21023-XPLAN
FILE INFO: P:\21023 UNO Engineering Roof Rplcmt\Drawings\CAD\21023- A901 - ROOF PLAN.dwg

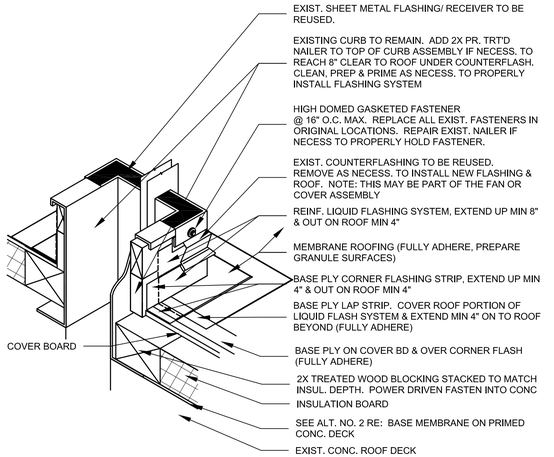

A1 AXON DETAIL @ EQUIP. CURB
SCALE: N.T.S.

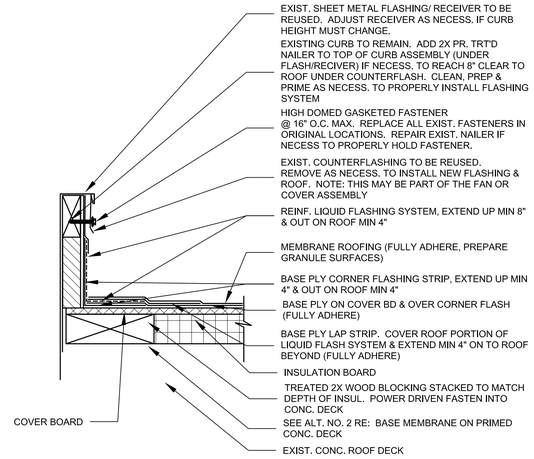

A2 DETAIL @ EQUIP. CURB
SCALE: N.T.S.

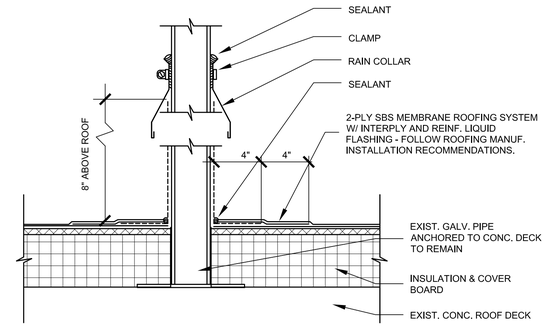

A3 DETAIL @ PIPE PENETRATION
SCALE: N.T.S.

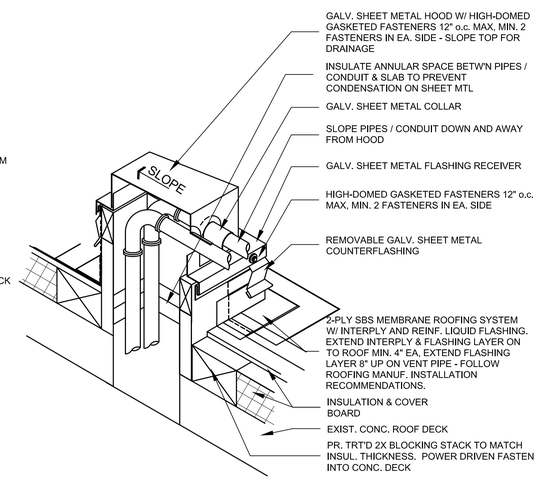

A4 AXON DETAIL @ ROOF COWL
SCALE: N.T.S.

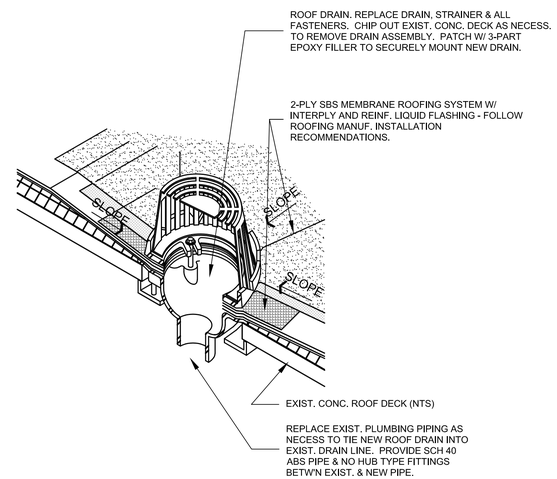

B1 AXON DETAIL @ ROOF DRAIN
SCALE: N.T.S.

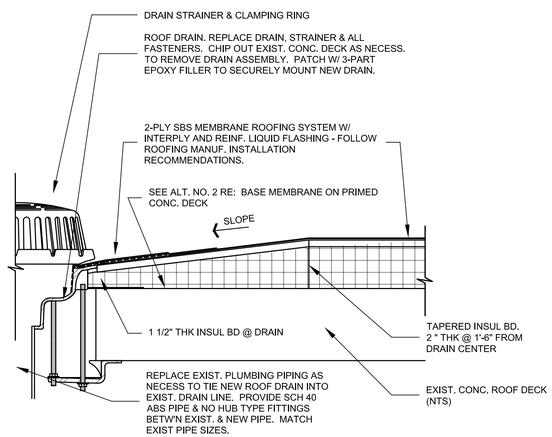

B2 DETAIL @ ROOF DRAIN
SCALE: N.T.S.

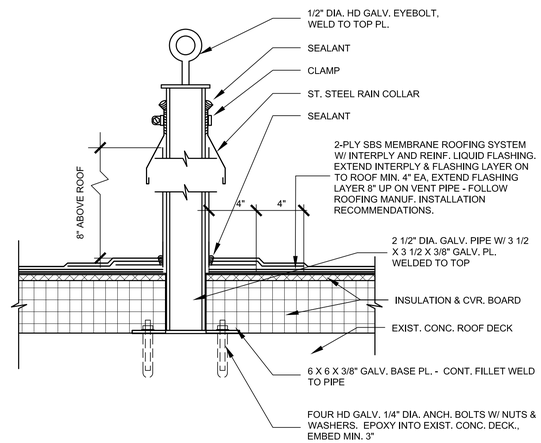

B3 DETAIL @ GUY WIRE ANCHOR
SCALE: N.T.S.

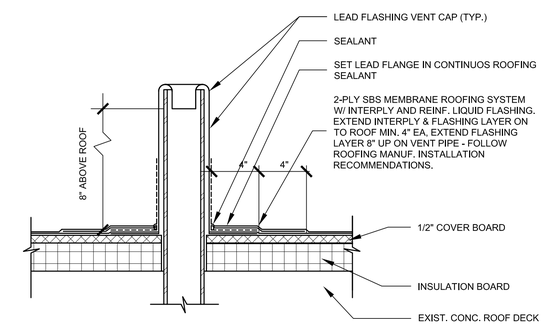

B4 DETAIL @ VENT THRU ROOF
SCALE: N.T.S.

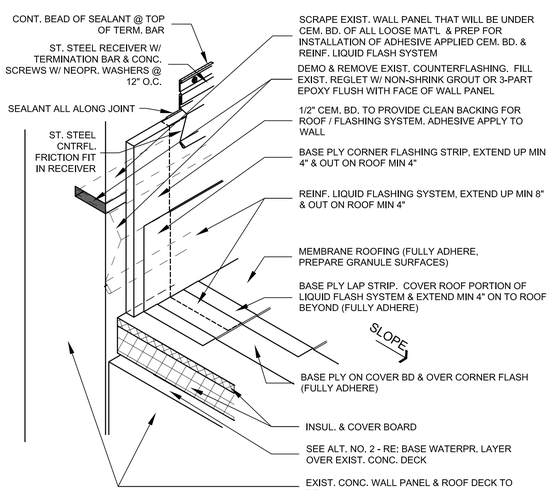

C1 DETAIL @ PENTHOUSE WALL
SCALE: N.T.S.

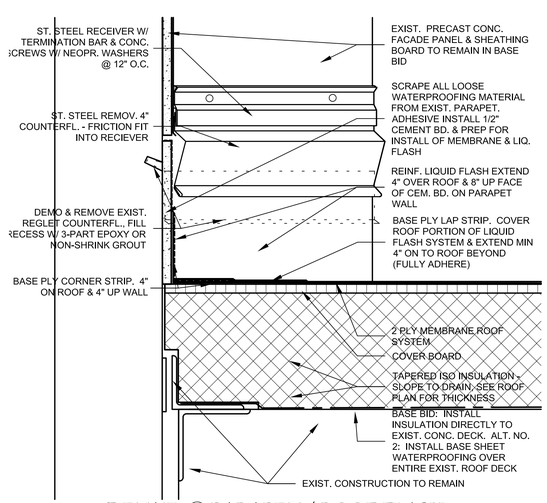

C2 DETAIL @ PARAPET / ROOF FLASH
SCALE: N.T.S.

GENERAL NOTES:

A. SHEET METAL FLASHING DETAILS & ASSEMBLIES SHALL BE FABRICATED AND INSTALLED TO MEET SMACNA & NRCA STANDARDS. COORDINATE ANY CONFLICTS BETW'N THE STANDARDS AND THE CON. DOCS WITH THE ARCHITECT PRIOR TO BIDDING.
B. ROOFING AND ALL ASSOCIATED COMPONENTS SHALL BE INSTALLED TO MEET THE ROOF MANUF. RECOMMENDATIONS. COORDINATE ANY CONFLICTS BETW'N THE RECOMM. AND THE CON. DOCS WITH THE ARCHITECT PRIOR TO BIDDING.
C. JOINTS IN COVERBOARD & INSULATION SHALL BE STAGGERED SO THAT NO JOINTS ALIGN.

MOCK-UPS:

A. PROVIDE ONE MOCK-UP FOR ARCHITECT'S REVIEW OF EACH ASSEMBLY SHOWN IN DETAILS ON THIS SHEET AND SHEET A912. THESE INCLUDE BUT ARE NOT LIMITED TO:
   - A.A. EQUIP. CURB
   - A.B. ROOF COWL
   - A.C. ROOF DRAIN
   - A.D. VENT THRU ROOF
   - A.E. PIPE SUPPORT FLASHING
   - A.F. EYEBOLT SUPPORT
   - A.G. ROOF TO WALL FLASH & COUNTERFLASH
   - A.H. SCUPPER
   - A.I. (ALTERNATE #1) PARAPET WALL FLASHING & COPING / CAP FLASH INCLUDING SHORT AND TALL PARAPET AREAS.
B. PREPARE AS MANY MOCK-UPS AS POSSIBLE FOR REVIEW AT ONE TIME.
C. ACCEPTED MOCK-UPS ARE INTENDED TO BE INCORPORATED INTO THE WORK.

HOLLY & SMITH ARCHITECTS
HAMMOND
T 985.345.5210
NEW ORLEANS
T 504.585.1315
www.hollyandsmith.com

ROOF REPLACEMENT
SECTION B
UNO Engineering Building
2000 Lakeshore Drive, New Orleans, LA 70148

KEVIN J. MORR IS No. 5598 STATE OF LOUISIANA REGISTERED ARCHITECT

DESCRIPTION	DATE

PROJECT NO.	21023
PHASE	CD
DATE	07.19.21
PROJECT MANAGER	RS
QUALITY CONTROL	

This drawing, as an instrument of service, is and shall remain the property of the architect and shall not be reproduced, published, or used in any way without the permission of the architect.
© copyright Holly & Smith Architects, APAC

BID DOCUMENTS

A 911

ROOF DETAILS

S/H

PLOTTED: Jul 19, 2021 11:52am BY: john
XREFS: 21023 TB 24X36 MODIFIED: Jul 19, 2021 11:52am
FILE INFO: P:\21023 UNO Engineering Roof Rplcmt\Drawings\CAD\21023-A911 - ROOF DETAILS.dwg

NOTE: AT DETAILS A1 & A2 ON THIS SHEET ALL NOTES REFERENCE WORK UNDER ALTERNATE NO. 1 UNLESS NOTED OTHERWISE

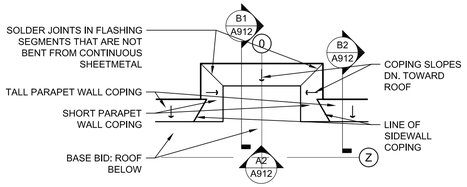

A1 Detail Plan @ Parapet

SCALE: 1/2" = 1'-0"

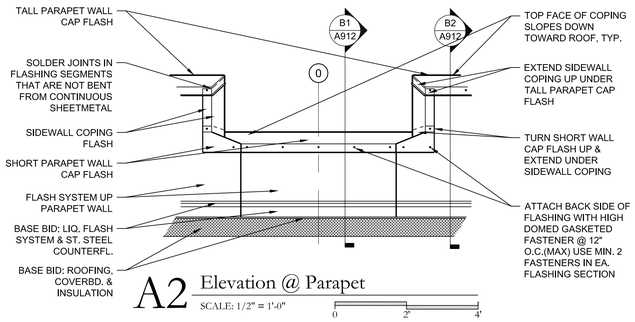

A2 Elevation @ Parapet

SCALE: 1/2" = 1'-0"

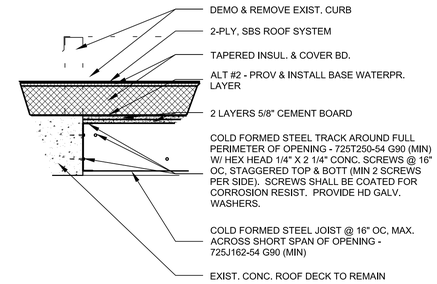

A3 Section thru Roof Deck Infill

SCALE: 1" = 1'-0"

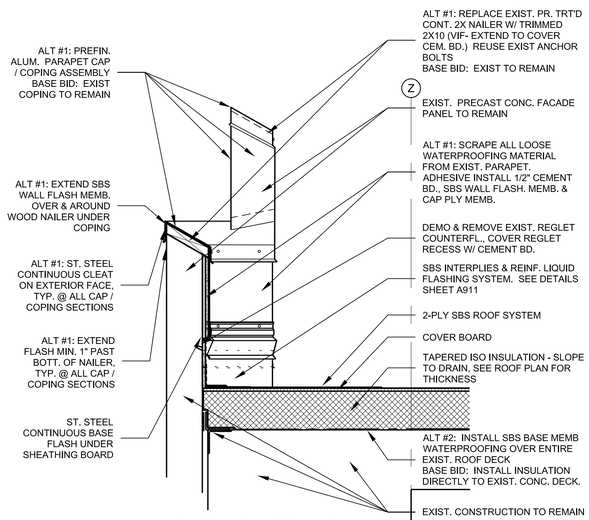

B1 Section thru Short Parapet

SCALE: 1" = 1'-0"

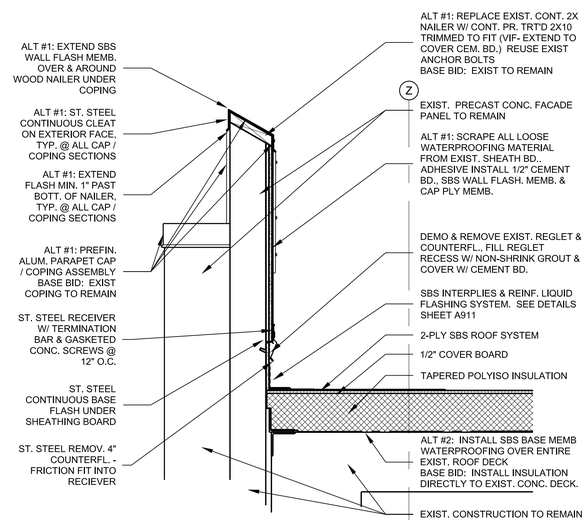

B2 Section thru Tall Parapet

SCALE: 1" = 1'-0"

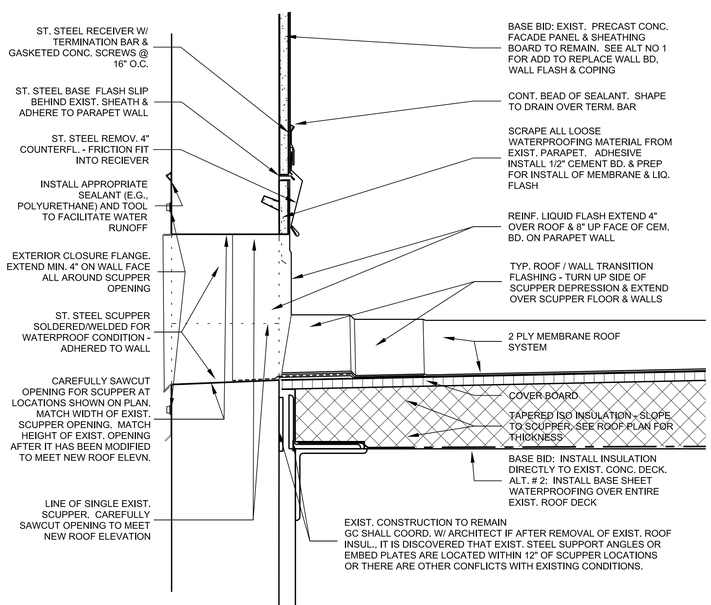

C1 DETAIL @ SCUPPER

SCALE: 3" = 1'-0"

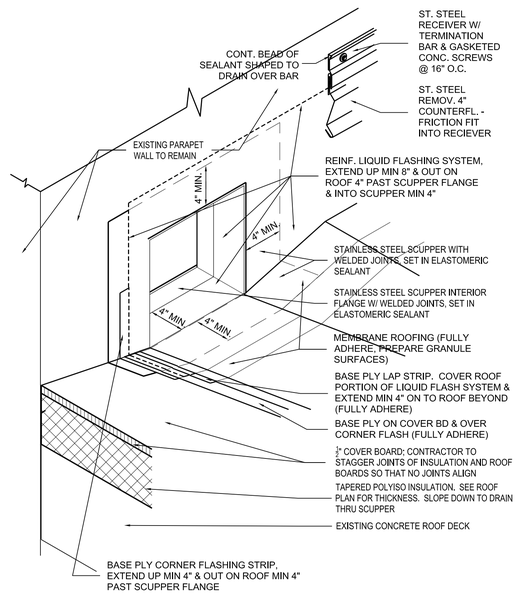

C2 AXON DETAIL @ SCUPPER

SCALE: N.T.S.

HOLLY & SMITH ARCHITECTS
HAMMOND
T 985.345.5210
NEW ORLEANS
T 504.585.1315
www.hollyandsmith.com

ROOF REPLACEMENT
SECTION B
UNO Engineering Building
2000 Lakeshore Drive, New Orleans, LA 70148

KEVIN J. MORRIS No. 5588 STATE OF LOUISIANA REGISTERED ARCHITECT

DESCRIPTION	DATE

PROJECT NO.	21023
PHASE	CD
DATE	07.19.21
PROJECT MANAGER	RS
QUALITY CONTROL	

This drawing, as an instrument of service, is and shall remain the property of the architect and shall not be reproduced, published, or used in any way without the permission of the architect.
© copyright Holly & Smith Architects, APAC

BID DOCUMENTS

A 912

ROOF DETAILS

H/S

PLOTTED: Jul 19, 2021 9:05am BY: john
XREFS: 21023 TB 24X36 MODIFIED: Jul 19, 2021 9:05am
FILE INFO: P:\21023 UNO Engineering Roof Rplcmt\Drawings\CAD\21023- A912 - ROOF DETAILS.dwg