STATE OF LOUISIANA
SOUTHEASTERN LOUISIANA UNIVERSITY
HAMMOND, LOUISIANA
(A Member of the University of Louisiana System)

INVITATION TO BID
TO
FURNISH A WASHING MACHINE AND DRYER VENDING CONCESSION FOR THE SOUTHEASTERN AUXILIARY SERVICES DEPARTMENT

ISSUING AGENCY: Southeastern Louisiana University
Purchasing Department
SLU 10800
Hammond, LA 70402

DIRECTOR OF PURCHASING: Richard Himber

PROCUREMENT SPECIALIST 3: Phyllis Hoover
Ph: (985)549-5415

CONTRACT COORDINATOR: Chris Asprion
Ph: (985)549-2118

ITB RELEASE DATE: April 13, 2021

MANDATORY PRE-BID MEETING: April 28, 2021, 10:00 a.m., CST
Location: University Housing
1301 SGA Drive
Pride Hall Conference Room
Hammond, LA

DEADLINE FOR FAX INQUIRIES: (Fax To: 985-549-3810 Attn: Hoover)

ITB OPENING DATE: May 12, 2021

ITB OPENING TIME: 4:00 p.m., Central Time

ITB OPENING LOCATION: Southeastern Louisiana University
Purchasing Department
Property Control & Supply Building
2400 North Oak Street
Hammond, LA

NOTE: THIS SOLICITATION IS A SEALED BID AND MUST BE RETURNED BY MAIL OR DELIVERED IN PERSON. BID RESPONSE FORMS CANNOT BE FAXED OR EMAILED, AND ANY FAX OR EMAIL RESPONSES SHALL BE REJECTED.

This ITB is available in electronic form at http://wwwprd.doa.louisiana.gov/osp/lapac/pubmain.asp It is available in PDF format or in printed form by submitting a written request to the Procurement Specialist listed above. It is the Bidder's responsibility to check the Office of State Purchasing LaPAC website frequently for any possible addenda that may be issued. Southeastern is not responsible for a bidder's failure to download any addenda documents required to complete an Invitation to Bid.

SOUTHEASTERN LOUISIANA UNIVERSITY

BID RESPONSE FORM

BIDDER'S NAME: _____

TELEPHONE NO.: _____ FAX NUMBER: _____

ADDRESS: _____
MAILING CITY STATE ZIP

Scope of Service: Furnish A Washing Machine And Dryer Vending Concession For The Southeastern Auxiliary Services Department

Contract Period: Commence July 20, 2021 and terminate July 19, 2022

Extended Period: Contract may be extended for (4) additional (12) month periods at the same commission, terms and conditions

I/we do hereby declare that I/we have carefully examined the bid requirements and specifications, and having personally inspected the site, that I/we have a clear understanding of the said bid documents. I/we do hereby propose to provide the necessary labor, equipment, materials and labor. I/we do hereby agree to maintain and complete, in a thoroughly professional manner, the proposed concession service for the annual minimum guaranty or percentage commission rate stated hereinafter.

I/we do hereby acknowledge receipt of the following addenda (if any):

No.___ Dated _____ No.___ Dated _____ No. ___ Dated _____

MINIMUM GUARANTY: I/we agree to pay Southeastern an annual minimum guaranteed commission of ($10,000.00) unless the actual percentage commission rate stated hereinafter exceeds the aforementioned minimum guaranteed commission.

PRIMARY BID CONSIDERATION:

COMMISSION RATE: I/we agree to pay SLU the percentage commission rate of

_____ PERCENT (_____%)
based on the gross receipts after taxes of all washer and dryer units installed at Southeastern.

EQUIPMENT TO BE OFFERED (complete):

Equipment to be provided at initial commencement of the contract shall be NEW. STATE Brand and Model of equipment to be provided below:

Washing Machine - Brand _____ Model _____

Gas Dryer - Brand _____ Model _____

Electric Dryer - Brand _____ Model _____

ALTERNATE BID CONSIDERATION:

Southeastern is interested in a cost structure such that laundry services are included in the resident student's room rent. Please bid an alternate response bidding the cost per student Southeastern would be responsible to pay the vendor for laundry services per student for the Fall, Spring and Summer semesters. The rate bid would be charged and collected by Southeastern in the students' room rent.

A. COST PER STUDENT FOR LAUNDRY SERVICE (Fall Semester): ($_____)

B. COST PER STUDENT FOR LAUNDRY SERVICE (Spring Semester): ($_____)

C. COST PER STUDENT FOR LAUNDRY SERVICE (Summer Semester): ($_____)
==========

GRAND TOTAL A/B/C: _____

NOTE: Southeastern reserves the right to select the Primary or Alternate Bid Consideration it considers to be in Southeastern's best interest.

SIGNATURE CONSTITUTES ACCEPTANCE: Signature to the bid response form shall be construed as acceptance of the ITB in its entirety.

AUTHORIZED OFFICER: _____ _____
(Signature) (Print or Type Name)

TITLE: _____ **DATE:** _____

BID RESPONSE FORM CONTINUED

BID GUARANTY - Required of Bidder in the amount of five percent (5%) of Annual Minimum Guaranteed Commission of ($10,000):

Attached is ___ a bid bond(*) or ___ a certified check or ___ a cashier's check in the amount of ($_____).

(*) Bidder shall furnish a bid guaranty in the form of a bond from a surety or insurance company that is currently licensed to do business in the State of Louisiana. The bond shall be written by a surety or insurance company currently on the U.S. Department of the Treasury Financial Management Service list of approved bonding companies which is published annually in the *Federal Register*, or by a Louisiana domiciled insurance company with at least an A- rating in the latest printing of the A.M. Best's Key Rating Guide to write individual bonds up to 10 percent of policyholders' surplus as shown in the A.M. Best's Key Rating Guide. A bid deposit in the form of a certified check or cashier's check made payable to Southeastern Louisiana University may be submitted in lieu of a bond.

PERFORMANCE GUARANTY - Required of successful Bidder in the amount of (100%) of The Annual Minimum Guaranteed Commission of ($10,000):

Bidder is to list the name, address (street/city/state/zip) & telephone number of the Louisiana licensed surety or insurance company that shall be used to furnish the required bonding if selected the successful Bidder. See below (*).

Name of Surety:_____
(Not the Agent Company)

Surety's Address:_____

Surety Telephone No.:_____

Agent Company:_____ Telephone No:_____

* OR *

[ ] Bidder intends to submit an acceptable cash form in lieu of a performance bond to be remitted prior to the start of the contract term.

(*) The successful Bidder shall furnish a performance guaranty in the form of a bond from a surety or insurance company that is currently licensed to do business in the State of Louisiana. The surety or insurance company furnishing the performance bond shall be written by a surety or insurance company currently on the U.S. Department of the Treasury Financial Management Service list of approved bonding companies which is published annually in the *Federal Register*, or by a Louisiana domiciled insurance company with at least an A- rating in the latest printing of the A.M. Best's Key Rating Guide to write individual bonds up to 10 percent of policyholders' surplus as shown in the A.M. Best's Key Rating Guide, or by an insurance company that is either domiciled in Louisiana or owned by Louisiana residents and is licensed to write surety bonds.

BID RESPONSE FORM CONTINUED

This form is to be completed in its entirety and submitted with the bid response form(s). Failure to complete or return the form with the other bid response form(s) may cause rejection of bid without further consideration.

INSURANCE INFORMATION TO BE PROVIDED BY BIDDER

Bidder is to list the name and address (street/city/state/zip) of the Louisiana licensed insurance company that is intended to be used to furnish the required minimum levels of insurance coverage if selected the successful Bidder.

WORKER'S COMPENSATION AND EMPLOYER'S LIABILITY .... STATUTORY MINIMUM COVERAGE

Name of Insurer:_____
(Not the Agent Company)

Insurer's Address:_____

Check Insurer's A.M. Best Rating: [ ] A Level / [ ] B, C, D, E, F Level

Check Best Financial Size Category Rating: [ ] VI or Greater; [ ] V or Less

If Not A.M. Best Rated - State Type of Insurer:_____

Agent Company: _____ Telephone No:_____

COMMERCIAL GENERAL LIABILITY ..... $1,000,000 MINIMUM COVERAGE

Name of Insurer:_____
(Not the Agent Company)

Insurer's Address:_____

Check Insurer's A.M. Best Rating: [ ] A Level / [ ] B, C, D, E, F Level

Check Best Financial Size Category Rating: [ ] VI or Greater; [ ] V or Less

Agent Company: _____ Telephone No:_____

AUTOMOBILE LIABILITY ..... $1,000,000 MINIMUM COVERAGE

Name of Insurer:_____
(Not the Agent Company)

Insurer's Address:_____

Check Insurer's A.M. Best Rating: [ ] A Level / [ ] B, C, D, E, F Level

Check Best Financial Size Category Rating: [ ] VI or Greater; [ ] V or Less

Agent Company: _____ Telephone No:_____

INSTRUCTIONS TO BIDDERS

PURPOSE

This Invitation to Bid (ITB) sets forth the requirements and specifications of Southeastern Louisiana University / Southeastern / University. The contents of this ITB and the Bidder / Vendor's bid response shall become contractual obligations if a contract ensues. The bid and any resulting contract shall be governed under the laws of the State of Louisiana.

GOVERNING BID REGULATIONS

This contract will not involve the expenditure of funds by the University. As a result, the LA Procurement Code - LRS 39:1551, et seq., LA Administrative Code - LAC 34:III.301, et seq., LA Executive Order No. JBE-2020-21, and LA Revised Statutes 17:3355 and 17:3361, shall not be applicable to this solicitation. Invitation to Bids are solicited in an effort to obtain the offering determined by the University as being in Southeastern's overall best interest.

Definitions

A. Shall - The term "shall" denotes mandatory requirements per R.S. 39:1556(24).

B. Must - The terms "must" denotes mandatory requirements.

C. May - The term "may" denotes an advisory or permissible action.

D. Should - the term "should" denotes desirable

E. Vendor - Any person having a contract with a governmental body.

F. Southeastern - Southeastern Louisiana University

BID RESPONSE FORM

All bids shall include the bid response forms provided in the ITB. The bid response form for signature must be properly signed in ink by an officer of the proposing entity authorized to sign the bid. Bid prices shall be typewritten or in ink. Any alterations of the bid response form or foreign conditions attached thereto may cause rejection of the bid.

CORRECTION OF MISTAKES

Erasures, write-overs, corrections or other changes in the bid are to be initialed by the Bidder. Failure to do so may result in rejection of the bid without further consideration.

NUMBER OF COPIES

The entire ITB shall NOT be required to be returned with the bid response. The Bidder shall submit **one (1) originally signed bid response form with any required information** and the Bidder should submit **one (1) photocopy** of the original bid response. The Bidder shall be responsible for duplicating and retaining any bid forms and responses for personal record.

REJECTION OF BIDS

The University reserves the right to reject any and all bids, and to waive any informalities. The right is reserved to award contracts separately, grouped, or an all-or-none basis. Incomplete, illegible, partial or informal bids may be rejected.

SEALED BID

The entire bid shall be sealed. All bids should be submitted in the special bid envelope furnished for that purpose. Bids submitted in other than the special bid envelope should be sufficiently identified to avoid premature opening of the bid response. The name and address of the Bidder should appear on the outside of the bid envelope. In the event the bid contains bulky subject material, the special bid envelope or other form identifying the solicitation should be firmly affixed to the mailing envelope or container.

BIDS BINDING

All formal bids shall be binding for a minimum of (60) calendar days and shall not be withdrawn after the specified return date.

BID CONFIDENTIALITY

All bid responses shall become a matter of public record at time of bid award unless otherwise exempted under the Louisiana Public Records Law. By submitting a bid response, bidder assumes all risks and liability associated with information marked confidential in the bid and the release of the information. However, the University will endeavor to protect from public access and review any trade secrets and/or financial information designated as confidential by the bidder and specifically requested in response to the ITB.

BIDS DUE

Bidders shall be responsible for the timely delivery of the bid by the ITB return deadline. Bids received after the specified time and date will not be considered, whether delayed in the mail or for any other causes whatsoever.

Bid response may be withdrawn by the Bidder upon written or fax request prior to the designated time for return of bids. Withdrawal notification must be by signature and received by the SOUTHEASTERN Purchasing Department prior to the designated deadline for return of bids.

DELIVERY OF BIDS

Each bid response shall be time recorded upon its delivery by Purchasing Department personnel. The Bidder or its agent may hand deliver the bid and the deliverer should request a written receipt of its delivery. Or the Bidder may deliver the bid by an express carrier securing the signature of the person accepting delivery. Or the Bidder may mail the bid by registered or certified mail return receipt requested.

The address for mailing bids:

Southeastern Louisiana University
Purchasing Department
SLU 10800
Hammond, LA 70402

For hand delivered or express bids:

Southeastern Louisiana University
Purchasing Department
Property Control & Supply Building
2400 North Oak Street
Hammond, Louisiana

BIDDER INQUIRIES

No negotiations, decisions or actions shall be executed by any Bidder as a result of any oral discussion with any state employee. Only those transactions which are in writing, signed by the Director of Purchasing in addendum form, shall be considered as valid. Telephone inquiries are discouraged. Inquiries concerning the administrative requirements of the ITB shall be submitted in

writing and faxed to the Director of Purchasing.

Inquiries concerning the performance requirements of the ITB shall be submitted in writing and faxed to the Contract Coordinator with a copy faxed to the Director of Purchasing.

Inquiries shall be in written form and signed by the inquirer, and received no later than the time and date designated herein. Answers to inquiries that change or substantially clarify the ITB shall be issued in the form of addendum to all known to have received a complete set of documents.

BID COST INCURRED

This solicitation does not commit the University to award a contract and the University shall not be responsible for any costs incurred by any Bidder in the preparation of any bid.

BID GUARANTY

When specified elsewhere in the solicitation (bid response form), a bid bond, cashier's check, or certified check, made payable to Southeastern Louisiana University, for the amount specified, must accompany the bid response.

The bid guaranty shall be subject to forfeiture for failure on the part of the successful Bidder (a) to satisfy any bid requirements, or (b) to furnish any required performance guaranty or insurance verifications, or (c) to execute the contract within the time stipulated after official notification is made by the University.

The University shall have the right to retain the bid guaranty of all Bidders until either (a) the successful Bidder has satisfied all ITB requirements and the contract has been executed, or (b) all bids have been rejected. Only bid guarantees in check form will be returned to Bidders.

PERFORMANCE GUARANTY

When specified elsewhere in the solicitation (bid response form), the successful Bidder shall furnish a performance bond in accordance with requirements outlined within (10) calendar days of official written notice (Notice of Award). Performance bond shall be made payable to Southeastern Louisiana University in the amount specified. If the contract is extended, then the performance bond may be required to be renewed for each successive contract term in force.

The bonds shall secure for the University the prompt and faithful performance of the Vendor in strict accordance with the contract.

The University reserves the right to accept the performance guaranty in an acceptable cash form other than a performance bond.

TAXES

The successful Vendor shall be responsible for reporting and payment of any and all applicable Federal, State, County, Parish, Municipal or other taxes in connection with this contract.

LIST OF USERS

The Bidder should attach to the Bid Response Forms a list of at least (3) universities, businesses, organizations or personally-owned operations in which washer and dryer vending of a similar nature as specified herein has been provided for within the last (2) years. This list should include the name of the university or business or organization or personally-owned operation, their address, its address, its telephone number, a contact person and the dates of

service.

BIDDER PROFILE

Each Bidder should attach to the Bid Response Forms, a profile of their company. This profile should include, but is not limited to, the following information as of the ITB release date:

1) the year the company was formed;
2) total number of years experience in washer/dryer vending operations;
3) a list of the names of all owners of the company or officers of the corporation;
4) a plan for managing, staffing, and supervising the operation;
5) a detailed description of your established program for preventative maintenance and regular replacement of worn, malfunctioning or damaged equipment;
6) any other information the Bidder deems appropriate for consideration of their qualification to perform the contract work.

DESCRIPTIVE LITERATURE

The Bidder should attach to the Bid Response Forms, product brochures or other descriptive literature describing the make and model of the washer and dryer units to be installed.

MANDATORY PRE-BID MEETING

A * MANDATORY * pre-bid meeting shall be conducted for the benefit of all Bidders on the date and time specified on the cover of the ITB. Bidders shall assemble in the designated location on the SOUTHEASTERN campus on the date and time specified and the Bidder should allow sufficient time to participate in the entire meeting. No other arrangements shall be made for any Bidder unable to attend on the date and time specified. Failure to be represented at the mandatory pre-bid meeting shall result in rejection of the bid without further consideration. **Social distancing and properly worn face masks will be required.**

MINIMUM GUARANTY

The successful Bidder shall guarantee to the University an annual minimum guaranteed commission of ($10,000.00) unless the successful Bidder's actual percentage commission rate exceeds the aforementioned annual minimum guaranty.

PERCENTAGE COMMISSION RATE

The Bidder shall quote the percentage commission rate that the Bidder shall pay Southeastern according to the gross sales from operation of all washers and dryers installed at Southeastern. This percentage to the University shall be based on the gross receipts after taxes from operation of all washers and dryers installed at Southeastern. The successful Vendor shall be responsible for payment of all costs (labor, equipment, materials, taxes, license fees, maintenance, bonds, insurance, etc.) necessary to execute the designated contract service in full conformity with the ITB.

CERTIFICATE OF AUTHORITY

Any successful corporate vendor shall furnish a photocopy of the company's authority to transact business in the State of Louisiana pursuant to Louisiana Revised Statute 12:301. If bidder does not presently possess such Certificate of Authority, then the bidder should with urgency contact the Louisiana Secretary of State Corporations Division (225-925-4704) regarding application. Application process may take several weeks to secure certificate and time is of the essence.

QUALIFICATION OF BIDDER

Southeastern reserves the right to make inquiries and investigations as it deems necessary to determine the responsibility of any Bidder to perform the services. The Bidder shall furnish all information and data for this purpose as the University may request. The unreasonable failure of any Bidder to promptly supply information in connection with an inquiry may be grounds for nonresponsibility.

BID AWARD

The contract shall be awarded with reasonable promptness by written notice to a responsible and responsive Bidder whose bid meets the requirements and criteria set forth in the ITB. Award will be made to the Bidder offering the highest percentage commission rate to be paid to Southeastern for the contract period. In the event of a tie, Southeastern may select the Bidder determined to be in Southeastern's overall best interest from the information provided in response to the ITB.

CLAIMS OR CONTROVERSIES

Any claims or controversies shall be resolved in accordance with the Louisiana Revised Statute 39:1673.

UNIVERSITY OF LOUISIANA SYSTEM INSTITUTIONS

Southeastern extends the award of this solicitation for piggy backing at the same commissions, costs, terms and conditions to any of the following University of Louisiana System institutions if mutually agreeable with the successful bidder:

Grambling State University
LA Tech University
McNeese State University
Nicholls State University
Northwestern State University
University of Louisiana at Lafayette
University of Louisiana at Monroe
University of New Orleans

STANDARD TERMS & CONDITIONS

ACCESS TO RECORDS

The Vendor agrees that the University and the Legislative Auditor of the State of Louisiana shall have access to, and the right to audit and examine, any pertinent books, documents, papers, and records of the Vendor related to this solicitation and any resulting contract.

ACCIDENTS

The Vendor agrees that in the event of any accident of any kind and degree, the Vendor will immediately notify the University's Campus Police Department (985-549-2222) and thereafter furnish a full written report of such accident.

ASSIGNMENT

The contract or any portion thereof or any interest therein shall not be assigned, transferred, conveyed, sublet or disposed of without the previous consent, in writing, of the University. Any attempted assignment under the contract shall be void and of no effect.

CONTRACT AGREEMENT

The Contract, and any properly executed amendment thereto, the Invitation to Bid, the Vendor's bid response and the Vendor's performance guarantees shall constitute the entire agreement between the parties and shall supersede all prior oral or written agreements or understandings.

The Vendor shall execute a contract with the University, in the form prescribed herein by the University, no later than the expiration period for furnishing verification of insurance coverage.

The Contract shall not be modified, altered, or changed except by mutual agreement amended in writing by the authorized representative of each party to the Contract.

CONTRACT EXTENSION

Based upon the mutual agreement of the successful Bidder and Southeastern Louisiana University, this contract may be extended for four (4) additional twelve (12) month periods (July through July).

"The continuation of this contract at all times is contingent upon the appropriation of funding to the University by the Louisiana State Legislature."

COPYRIGHTS AND PATENTS

The Vendor shall indemnify and hold harmless the State, the University, its officers, agents and employees harmless from liability of any nature or kind for the use of any copyrighted or uncopyrighted composition, secret process, patented or unpatented, invention, article or appliance furnished or used in the performance of the contract of which Vendor is not the patentee, assignee, or licensee.

DISPOSAL OF NON-HAZARDOUS MATERIALS

The Vendor shall at all times keep the premises free from accumulations of trash, waste materials and debris caused by its employees or its operations. Removal of all trash, waste materials and debris generated by operations shall be disposed of in receptacles provided at designated locations.

EQUAL EMPLOYMENT OPPORTUNITY

The Vendor shall be an equal employment opportunity employer. The Vendor shall neither discriminate nor permit discrimination in its operations or employment practices against any person or group of persons on the grounds of race, color, religion, national origin, or sex in any manner prohibited by law.

FORCE MAJEURE

Both parties agree that, if by reason of strike or other labor disputes, civil disorders, inclement weather, acts of God, or other unavoidable cause, either party is unable to entirely perform its obligations, such performance shall not be considered a breach of the contract.

GOVERNING LAW

The contract, and all matters or issues related to it, shall be governed by and shall be in accordance with the laws of the State of Louisiana.

If any provision of the contract, as applied to either party or to any circumstance, shall be adjudged by a court to be void or unenforceable, the same shall in no way affect any other provision of the contract or the validity or enforceability of the contract.

HAZARDOUS WASTE GENERATION

In the event the Vendor produces "a hazardous waste" as defined by the Department of Natural Resources Hazardous Waste Division of the State of Louisiana, then the Vendor shall be designated as the "generator" of such waste. The liability of hazardous waste disposal shall rest with the Vendor and not the University.

HOLIDAYS

The University shall recognize the following holidays during the contract term. Vendor shall not be responsible for responding to service on these holidays.

1) New Year's Day
2) Martin Luther King Day
3) Mardi Gras Day
4) Good Friday
5) Memorial Day
6) Independence Day
7) Labor Day
8) Thanksgiving Day
9) Christmas Day

The Vendor shall seek, in writing, the advance written approval of the contract Coordinator regarding the recognition of any other holidays for its employees not contained herein.

INDEMNIFICATION AGREEMENT (HOLD HARMLESS)

The Vendor agrees to protect, defend, indemnify, save and hold harmless the State of Louisiana, all State Departments, Agencies, Boards and Commissions, its officers, agents, servants and employees, including volunteers, from and against any and all claims, demands, expenses and liability arising out of injury or death to any person or the damage, loss or destruction of any property which may occur or in any way grow out of any act or omission of the Vendor, its agents, servants, and employees, or any and all costs, expense and/or attorney fees incurred by Vendor as a result of any claim, demands, and/or causes of action except of those claims, demands, and/or causes of action arising out of the negligence of the State of Louisiana, all State Departments, Agencies, Boards, Commissions, its agents, representatives, and/or employees. Vendor agrees to investigate, handle, respond to, provide defense for and defend any such claims, demand, or suit at its sole expense and agrees to bear all other costs and expenses related thereto, even if it (claims, etc.) is groundless, false or fraudulent.

INDEPENDENT VENDOR

All of the Vendor's employees furnishing or performing services under the contract shall be deemed employees solely of the Vendor and shall not be deemed for any purposes whatsoever employees or agents of, acting for or on behalf of, the University. The Vendor shall perform all services as an independent Vendor and shall discharge all its liabilities as such. No acts performed or representations made, whether oral or written, by the Vendor with respect to third parties shall be binding on the University.

INSPECTION OF FACILITIES

The Vendor should visit the site of the proposed service, inspect the site, utilities, equipment and particularly familiarize himself with the difficulties and restrictions regarding the execution of the proposed service. No additional allowance shall be granted to any Vendor because of lack of knowledge of conditions.

INSURANCE

The Vendor shall procure and maintain for the duration of the Work insurance against claims for injuries to persons or damages to property which may arise from or in connection with the performance of the Work hereunder by the Vendor, his agents, representatives, employees or subcontractors. The cost of such insurance shall be included in the Vendor's bid. See specific requirements regarding insurance elsewhere in the ITB.

The insurance afforded by this policy shall not be suspended, voided, cancelled, reduced in coverage or in limits except after (30) days' prior written notice by certified mail return receipt requested has been given to the University.

KEYS AND ACCESS CARDS

The Vendor shall be responsible for all keys and access cards issued to him. Keys shall not be left in doors and shall not be used to admit anyone except recognized University personnel. All exterior entrance doors shall be closed, locked and checked before leaving the building each evening. All interior doors shall be closed, locked and checked before leaving the building each evening.

In the event of loss of any keys or access cards, the Vendor shall reimburse the University in whole or in part to correct any breach of security in the facility or facilities.

LAWS

The Vendor shall comply with all applicable laws, ordinances, and regulations of the local, state, and federal government in the performance of the contract.

The Vendor shall be responsible for strict compliance with all applicable local, state and federal laws concerning fair employment, minimum wage and equal opportunity practices.

LATE PAYMENT PENALTY

If Vendor fails to make any payment that is due within ninety (90) days of the due date prescribed by the specifications and requirements, the vendor shall pay, in addition to the payment, interest on the amount due at the rate established pursuant to the judicial interest rate referenced in R.S. 13:4202(B), from the ninety-first day after the due date prescribed by the specifications and requirements.

LIENS

The Vendor shall at all times keep the University free and clear from all liens asserted by any person, firm, or corporation for any reason whatsoever, arising from the furnishing of services (whether for services, work, labor performed, or materials or equipment purchased) by the Vendor pursuant to the terms of the contract. If any such lien shall at any time be filed against the University's premises in connection with the contract and the Vendor shall fail to cause such lien to be removed or discharged (by payment or bond or otherwise) within (10) calendar days after being notified of the filing of such lien, then the University may, without prejudice to any right or remedy available to the University, contact the surety or insurance company furnishing the performance guaranty and demand the lien be removed or discharged (by payment or bond or otherwise). The Vendor and its surety or insurance company shall be held liable for all costs and expenses (including attorney's fees) incurred by the University in resolving said lien.

NON-EXCLUSIVE AGREEMENT

The University reserves the right to purchase or receive services within the scope of the contract determined by the University to be within its best interests.

NOTICES

Any notice required under the contract shall be in writing and may either be given by personal delivery or sent by registered or certified mail to the other party. Notification to the Vendor shall be to the last known address on file with the University, unless otherwise amended in the contract. Notification to the University shall be to Southeastern Louisiana University, Purchasing Department, SLU 10800, Hammond, LA 70402.

PERMITS AND LICENSES

The Vendor shall, at its sole expense, procure and keep in effect all necessary permits and licenses required for performance under the contract, and the Vendor shall post or display in a prominent place such permits and/or notices as are required by law.

PERSONNEL

The Vendor agrees that, at all times, the employees of the Vendor furnishing or performing services under the contract shall do so in a proper, workmanlike, and dignified manner.

PRESENCE ON UNIVERSITY PREMISES

The Vendor agrees that all persons working for or on behalf of the Vendor whose duties bring them upon the University's premises shall obey all University policies, police security measures and vehicle regulations that are established by the University and shall comply with the reasonable directives of its University representatives and Police Security Officers.

The Vendor agrees that all employees of the Vendor shall register their motor vehicles with the University Police Department and that all employees will pay the current annual faculty/staff vehicle registration fee of ($25) dollars per vehicle. During the term of the registration, the employee shall be responsible for the payment of all traffic and parking fines assessed against the registered vehicle. However, in the event the employee fails to pay all recorded fines prior to the termination or expiration of employment or the contract, the Vendor will then become responsible for payment of all fines assessed against the employee.

The Vendor shall be responsible for the acts of its agents and employees while on the University's premises. Accordingly, the Vendor agrees to take all necessary measures to prevent injury and loss to persons or property located on the University's premises.

The Vendor shall be responsible for all damages to persons or property caused by the Vendor or any of its agents or employees. The Vendor shall promptly repair, to the specifications of the University's Physical Plant Department, any damage that the Vendor, its agents or employees, may cause to the University's premises or equipment.

The Vendor shall not allow any party under 18 years of age or any party that is not on the Vendor's payroll in any facility at anytime.

PUBLICITY

The Vendor shall not in any way or in any form publicize or advertise in any manner the fact that the Vendor is providing services to the University without the express written approval of the Director of Purchasing, obtained in advance, for each item of advertising or publicity. However, nothing herein shall preclude the Vendor from listing the University on its routine client list for matters of reference.

SAFETY

The Vendor, its agents and employees shall practice safe work habits, make safe use of chemicals, and handle safely equipment employed. In addition, the Vendor shall use equipment, signs, barriers, or other devices to protect persons or property, and shall avoid the usage of hazardous materials that are not essential to the performance of the contract.

SECURITY

The University shall have no responsibility for the loss, theft, mysterious disappearance of, or damage to, equipment, tools, materials, supplies, and other personal property of the Vendor, employees or agents, which may be brought or stored on the University campus.

STANDARD OF PERFORMANCE

The Vendor agrees to perform the services specified under the contract with that standard of care, skill, and diligence normally provided by a professional organization in the performance of such services.

SUPERVISION

The Vendor shall provide, at all times, adequate and expert supervision for its agents and employees in the areas under the contract.

SURRENDER OF PREMISES AND EQUIPMENT

On termination or expiration of the contract, the Vendor shall vacate all parts of the University's premises occupied by it and shall restore the premises to the University in the same condition as when originally made available to the Vendor, reasonable wear and use expected. Surrendered premises and equipment shall be left in a clean, orderly state satisfactory to the University.

SURVIVAL

The terms, conditions and representations contained in the contract shall survive the termination or expiration of the contract.

TAXES

The Vendor shall pay when due all taxes or assessments applicable to the Vendor. The Vendor shall comply with the provisions of the applicable statutes and the regulations of the applicable taxation authority.

TERMINATION FOR CAUSE

If, because of reasons beyond the control of the University (e.g. fire, legislative funding), business operation in any or all of the facilities of the University are interrupted or stopped, then the University shall have the right to terminate or suspend the contract immediately by certified written notice without any penalty thereof.

In the event of a possible termination for cause, if either party breaches any terms or conditions of the contract, the aggrieved party shall give the other party at least (10) calendar days written notification of the alleged breach. The aggrieved party shall set forth the alleged breach and demand compliance with the contract. Unless within (30) calendar days after receiving such notice, the notified party has not contested such alleged breach or such breach has ceased or the notified party has made arrangements to correct the alleged breach, then the aggrieved party may terminate the contract, without prejudice to any right or remedy the aggrieved party may have, by giving written notice. Any contract cancellation shall be served by registered or certified mail.

Termination for cause may be understood to be, but not limited to, failures on the part of the Vendor due to non-payment or repeated late payment of commissions, unsatisfactory performance of equipment, failure to provide the equipment as specified or offered, lack of income attributed to poor operation, management, service, etc. If termination is exercised, the Vendor shall remove all equipment and surrender the premises assigned in good condition, ordinary wear and use expected.

TERMINATION FOR CONVENIENCE

Southeastern or the successful Bidder may terminate the contract at its convenience upon (30) calendar days written notice prior to the end of an academic semester (May 15th, July 31st, December 31st). Any contract cancellation shall be served by registered or certified mail.

USE OF UNIVERSITY'S FACILITIES

The Vendor, its agents and employees shall have the right to use only those facilities of the University that are necessary to perform services under the contract and shall have no right of access to any other facility of the University.

UTILITY SERVICES

The University shall provide, at its own expense, services at existing outlets (electric power, gas and domestic water) for the convenience of the Vendor. Any modification to existing outlets required or requested by the Vendor shall be at the Vendor's expense. The University shall not be responsible for any loss or delay sustained by the interruption or failure of these utilities for any cause whatsoever.

SPECIFICATIONS & REQUIREMENTS

Southeastern Louisiana University desires to enter into a contract to provide washing machine and dryer units for University residents on the Southeastern campus in accordance with the requirements and specifications stated hereinafter.

TYPE OF OPERATION

The University desires a washing machine and dryer unit vending operation that shall provide accountability on the part of the Vendor and maximum service to students. Southeastern desires a system that will account for each wash or dry sold to the customer. The Vendor must provide student ID card operated laundry equipment (see equipment to be provided below). Southeastern shall not be responsible for theft or vandalism to these machines and the security thereof. Any resulting loss due to theft shall not relieve the Vendor from remitting the minimum annual guarantee to the University.

STANDARD OPERATION CHARGES

All washing machine and dryer units shall be based on the following standard operation charges for the first year of operation: ($1.00) per wash cycle for washing machines and ($1.00) per 45 minutes for dryer units. All price changes are subject to the prior acceptance and approval by Southeastern. Operation charges for subsequent contract renewal periods may be negotiated (60) calendar days prior to the start of the renewal period.

EQUIPMENT TO BE PROVIDED

All washer and dryer equipment to be furnished shall be new.

The Vendor is to equip each washer and dryer machine with a non-reset counter for recording all sales by each machine. Equipment shall be tamper-proof.

The Vendor shall initially locate 65 washers and 77 dryers in locations designated by Southeastern.

Equipment should be "white" color or an approved neutral color for both washer and dryer. Equipment shall be compatible in terms of decor when two or more machines are placed together at one location. **To ensure accessibility, ALL machines must be front load.**

All washers and dryers MUST have card readers. (See Washer / Dryer Table Placement & Requirements). Card readers shall be compatible with CBORD - CS Gold. Reader shall be LAU6790128 ValuePlus Laundry Reader. The University shall provide the LAU6790128 ValuePlus Laundry card reader.

Initial and subsequent equipment installation shall be identified by serial number, manufacturer and type of equipment. All changes shall be determined by mutual agreement with the Contract Coordinator or their designee.

THE VENDOR AGREES TO:

Install all units to an operational status no later than (10) working days after commencement of the contract term or other time frame agreed upon by the Contract Coordinator or their designee.

Permit the University to review the counters requested with the Vendor. Dates and times to be determined by the Contract Coordinator or their designee.

Meet each semester with the Contract Coordinator to discuss adjustments in equipment, operations, policies and products and to cooperate at all times to maintain maximum efficiency and service.

Contract for supplies, equipment, services and employment in the Vendor's name and the Vendor and its employees shall not implicate the University directly or indirectly in any transaction.

Notify the Contract Coordinator or their designee prior to the removal or installation of any machine or parts that may affect the meter reading counts on the University campus. The Contract Coordinator or their designee shall be notified and the meter readings verified for these units.

Retain ownership of the equipment at all times and be responsible for the adequate insurance thereof.

Keep energy consumption at a minimum and comply with energy conservation practices and policies and endeavor to conserve the use of energy thereof. The University shall not be liable for any loss that may result from the interruption or failure of any such utility.

Allow the University to remove and/or secure any equipment during the contract term that may be in the best interests of the Vendor and/or the University.

Each laundry room should include written procedures for customers to report machine malfunctions, submit comments, and request refunds.

Refunds made to customers shall be at the expense of the Vendor. The University will assist in issuing refunds and will provide an accounting to the Vendor.

Be responsible and liable for damage to and replacement of customer's clothing caused by washers and dryers.

Distinguish employees by use of distinctive uniforms that readily identify the Vendor and employee by name. Vendor's personnel shall wear the uniforms at all times while on campus.

Assume direct responsibility and liability for any damage, negligence or theft by any of its employees.

Install equipment in conformance with state and city ordinances, codes and any other applicable regulations.

Not allow any party under 18 years of age or any party that is not on the Vendor's payroll in any building at anytime.

Furnish equipment and supplies at the Vendor's sole risk and expense and indemnify and hold the University harmless for any loss, damage, theft or vandalism to the equipment or injury caused thereby.

Agree upon the expiration of the contract period to remove all equipment and surrender the premises in as good a condition as received, ordinary wear and use

expected.

Permit the University to move any washer and dryer vending equipment not removed from University locations upon termination of this contract. Unit(s) may be removed and placed in storage by the University after (10) calendar days written notice. After 90 days the University reserves the right to properly dispose of equipment. All costs for removal and storage shall be at the rate of $10.00 dollars per day per machine. Product and revenue loss shall be the responsibility of the Vendor.

Submit, in writing, the name(s) and phone number(s) of personnel that may be contacted between the hours of 8:00 a.m. and 5:00 p.m. Sunday thru Saturday in the event of an emergency or problem. This information shall be submitted to the Contract Coordinator or their designee at the commencement of the contract. Provide a contact number for after hours in the case of an emergency.

Submit, in writing, the names, addresses and phone numbers of all employees to be utilized in entering any facility on campus. The Vendor shall be responsible for keeping this information current and up-to-date at all times during the contract term. This list shall be submitted to the Contract Coordinator or their designee at the commencement of the contract.

Provide appropriate laundry training and education to resident assistant staff during department's annual staff training.

Provide a web based laundry software, offering services including but not limited to, a listing of available machines, text/email alert when laundry is complete, for all machines at no additional cost. Southeastern understands that internet access is needed in each laundry facility and Southeastern will be responsible for providing internet at Southeastern's cost.

EQUIPMENT MAINTENANCE AND REPAIR

The Vendor shall provide factory trained repairmen and well qualified route men to service the machines on a regular workday basis.

The Vendor shall design a preventative maintenance program for the regular replacement of worn, damaged or malfunctioning equipment. This program shall include the maintenance of an inventory of certain equipment and parts necessary to meet emergencies. The University will not provide maintenance or repairs on any equipment belonging to the Vendor.

The Vendor shall provide remedial maintenance service to equipment in a timely manner to minimize down-time and lost revenue. Equipment that cannot be returned to full service within (5) working days of notification shall be replaced with equipment similar in design, decor and quality.

The Vendor shall maintain equipment and supplies during the term of the contract in a condition satisfactory to the University. The Vendor shall adhere to the highest standards of cleanliness and sanitary practices. The Vendor shall conduct equipment maintenance and sanitation inspections on a regular basis.

Sanitation of all equipment should be done to a minimum of quarterly, or more frequently as requested by the University at no cost. Sanitation dates and logs should be provided to University Housing. This should include, but not be limited to, sanitizing all washer/ dryer drums, cleanouts, hoses, filters, and seals. This is to also include vacuuming all ducts provided by the vendor.

THE UNIVERSITY AGREES TO:

Grant the Vendor the exclusive rights for the operation of washing machine and dryer units in the Auxiliary Services division for the stipulated period.

Provide electrical utilities, water, and gas "as is" for the washing machine and dryer units. Any modifications required shall be made at the Vendor's expense after prior written approval and acceptance by Southeastern and any such modifications shall become the property of Southeastern upon surrendering the premises. Southeastern shall not be responsible for any damages to any equipment or contents or from the loss of revenues resulting from the interruption of electrical power, gas or water supply.

Be responsible for the payment of all utilities related to the operation of the vending equipment.

Assist the Vendor in keeping the equipment and location attractive and clean.

Not to perform any maintenance or repair on any equipment of the Vendor.

Reserve the right to require the Vendor to replace any and all units, as in the University's opinion, that are considered unacceptable or unsafe for its student's use.

COMMISSIONS, ACCOUNTING CONTROLS, AND PAYMENTS

Commissions shall be expressed by the Vendor on the Bid response Form on gross sales. The percentage commission rate shall be based on the washer and dryer vend prices stated herein or amended.

To insure payment of this minimum guaranteed commission of ($10,000), the successful vendor shall have remitted to Southeastern a minimum of ($5,000.00) by the 10th February of each contract year. In the event the actual percentage commissions do not exceed the minimum guaranteed commission, the Vendor shall remit to Southeastern the difference between actual and guaranteed commissions. The same shall apply at the end of the current contract year to remit to Southeastern the difference between actual and guaranteed annual minimum commissions.

The Vendor shall keep separate and distinct records on each washer and dryer unit. University personnel shall escort Vendor during monthly collection as needed to secure the readings from non-reset cycle counters, and machine identification numbers/location.

During monthly collections, the Vendor shall "Z-out" card readers and university card system personnel shall generate reports and shall forward to University personnel for reconciliation. Vendor will receive a report of card sales.

The Vendor shall submit a report indicating the total dollars sold by each machine and location and the calculation of commissions based on gross sales as represented by non-reset counters.

<u>Commission payment shall be in the form of a check or electronic funds transfer made payable to Southeastern Louisiana University.</u>

Commission checks and reports are to be mailed to the Director of Auxiliary Services, Southeastern Louisiana University, SLU 11850, Hammond, LA 70402

ALTERNATE BID CONSIDERATION:

For contract purposes, Southeastern will use the resident occupancy total as of the 14th class day for Fall and Spring semester, and the 5th class day for Summer semester, to determine the total number of students assessed the laundry charge in their housing fees.

Occupancy	Fall 2017	*Spring 2018*	*Summer 2018*	Fall 2018	Spring 2019	Summer 2019	Fall 2019	Spring 2020
Hammond	201	*189*		196	182		201	186
Tangipahoa	154	*141*		150	132		152	131
Pride	216	*200*		209	191		213	192
Taylor	224	*213*		223	201		223	200
Livingston	179	*170*		183	161		186	167
Louisiana	154	*142*	*86*	154	129		154	138
St. Tammany	181	*170*		179	172		181	166
Washington	173	*164*	*28*	171	161		172	152
Ascension	/	/	/	270	255	24	268	239
Twelve Oaks	/	/	/	270	255	89	270	230
Cardinal Newman	89	*77*		87	69		89	61
The Village	250	*231*	*61*	245	224	135	246	215
Southeastern Oaks	334	*272*	*42*	305	269	30	286	280
Total	**2204**	***2187***	***217***	**2642**	**2401**	**278**	**2641**	**2357**

WASHER / DRYER PLACEMENT & REQUIREMENTS

The table below shows equipment location and quantities for card readers, which must be compatible with the university system. These are recommended quantities. The final quantities can be adjusted by mutual agreement of the Vendor and the University.

Washers shall be 60 cycle 110 volt AC and dryers shall be natural gas.
All of the dryers are stack and are gas operated.
Washers and Dryers must be front load.

Residence Hall	Washers	Dryers	Equipped With
Louisiana	14	18	Card reader
Washington	7	8	Card reader
Hammond	8	10	Card reader
Ascension	10	10	Card reader
Twelve Oaks	10	10	Card reader
Cardinal Newman	2	3	Card reader
Greek Village	6	8	Card reader
SE Oaks	8	10	Card reader
Total	65	77	Card reader

PAST SALES PERFORMANCE

Fiscal Year	2016-2017	2017-2018	2018-2019	2019-2020	2020-2021
Total Sales	$63,730	$68,601	$77,590	$62,542	$38,363*

*Complete only through January 2021

SPECIFICATIONS FOR READERS

The Online Laundry Control system enables patrons (valid cardholders) to use their patron ID cards, instead of coins, in laundry machines. When the LAU6790128 ValuePlus Laundry Reader Terminal Server (TS) or Building Controller (BC) reads a patron's ID card, it verifies the account number at the host and grants or denies the patron access to the use of a laundry machine based on the account status. Figure 1-1 shows the LAU6790128 ValuePlus Laundry Reader.

Figure 1-1: Value Plus Laundry Reader for ABA2 Swipe Cards

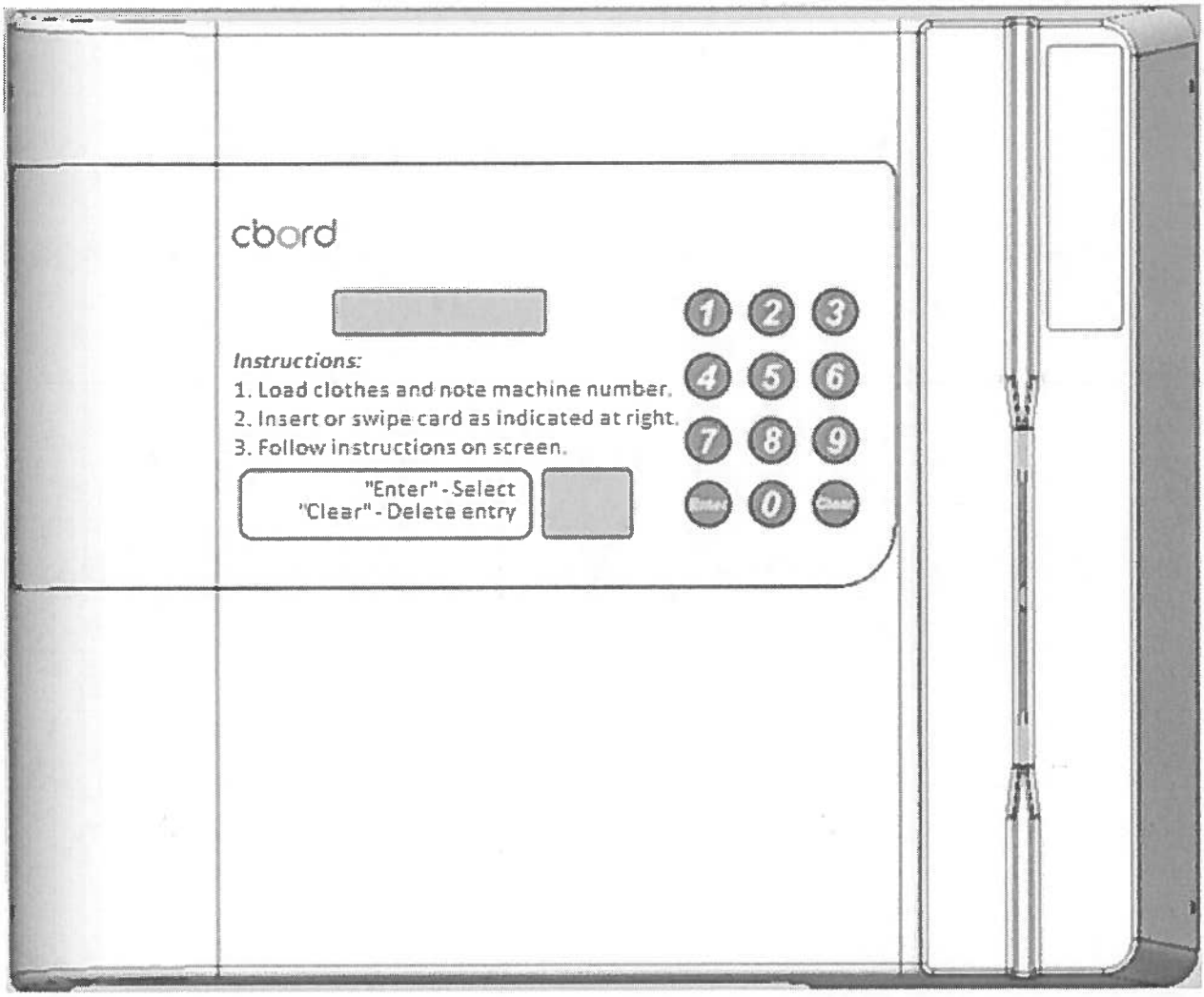

System Requirements:

The Value Plus Online Laundry Control System uses the following hardware:

- CBORD® CS Gold® host
- Value Plus Laundry Reader
- Machine Interface Connectors (MICs), as required
- Machine Interface Devices (MID) as required
- Cabling, as required

The laundry reader is connected to the host computer using the campus network. The following diagram, Figure 1-2, shows an overview of a Value Plus Online Laundry Control System.

Figure 1-2: Value Plus Online Laundry Control System

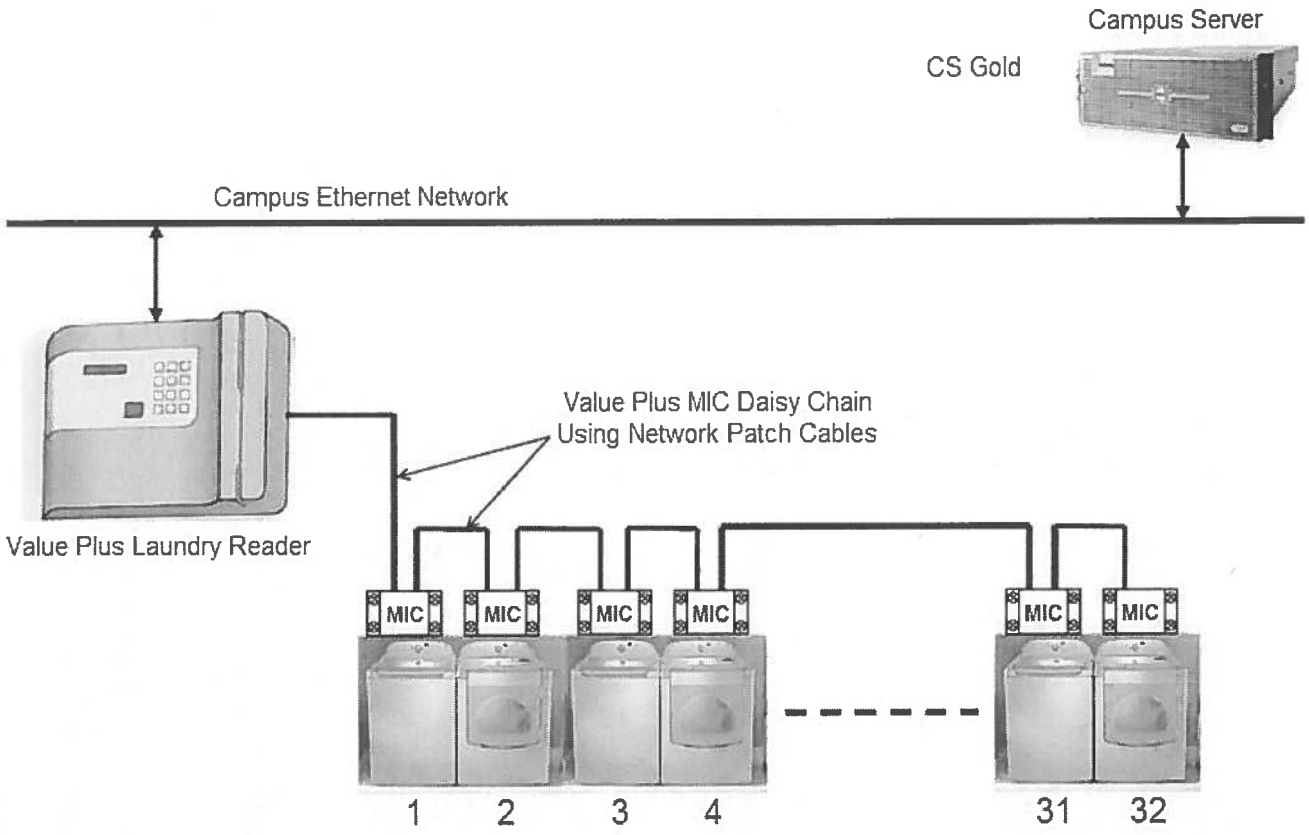

The laundry reader is connected to the host computer using the campus network. The following diagram shows an overview of a Value Plus Online Laundry Control System. **Note: This is only an example of how the reader communicates and does not represent how machines are laid out in laundry rooms or the model/ make of a machine.**

SPECIFICATIONS LR300

Parameter	Specification
Value Plus Laundry Reader	
Dimensions: Weight: Operating Environment: Max. Laundry Readers: AC Power: Current:	12.6 in/32.0 cm W x 10.3 in/26.2 cm H x 3.8 in/9.7 cm D 5.3 lb/2.4.kg +41o to +104oF/+5o to +40oC; 30-90% humidity, non-condensing 32 120 VAC 1.5 Amps
Laundry Machine Interface Connector	

Dimensions: 2.2 in/5.6 cm W x 4.5 in 11.5 cm L 1.5 in/3.8 cm D
Operating Environment: +41o to +104oF/+5o to +40oC; 10-90% humidity, non-condensing

Laundry Machine Interface Device for Mechanical Timers

Dimensions: 10 in/25.4 cm W x 6.5 in/16.5 cm H x 1.8 in/4.6 cm D
Operating Environment: +41o to +104oF/+5o to +40oC; 10-90% humidity, non-condensing

Laundry Machine Interface Device for Microprocessor Timers
Dimensions: 7.3 in/18.4 cm W x 6 in/15.2 cm H x 1.5 in/3.8 cm D
Operating Environment: +41o to +104oF/+5o to +40oC; 10-90% humidity, non-condensing

Hall Capacity and Student Usage of Laundry Facilities

HALL CAPACITY	
Residence Hall	Capacity
Hammond Hall	205
Tangipahoa Hall	155
Pride Hall	217
Taylor Hall	227
Livingston Hall	187
Louisiana Hall	160
St. Tammany Hall	182
Washington Hall	176
Ascension Hall	278
Twelve Oaks Hall	278
Cardinal Newman	94
The Village	270
Southeastern Oaks	312
Total	2741

# Students Using Each Facility	
Laundry Facility	# Students Who Use
Hammond Hall	360
Louisiana Hall	791
Washington Hall	358
Ascension Hall	278
Twelve Oaks	278
The Village	270
Southeastern Oaks	312
Cardinal Newman	94
Total	2741

STATE OF LOUISIANA

CONTRACT NO. _____

PARISH OF TANGIPAHOA

SAMPLE CONTRACT

BE IT KNOWN, that SOUTHEASTERN LOUISIANA UNIVERSITY (hereinafter sometimes referred to as "State") and (Vendor's name and legal address)_____
_____
(hereinafter sometimes referred to as "Vendor") do hereby enter into contract under the following terms and conditions:

CONTRACT DOCUMENTS: The contract documents shall consist of this Contract, the Invitation to Bid and the Vendor's bid response.

CONTRACT ORDER OF PRECEDENCE: In the event of any inconsistent or incompatible provisions, this signed Contract (excluding the ITB and Vendor's bid) shall take precedence, followed by the provisions of the Invitation to Bid, and then by the terms of the Vendor's bid.

CONTRACT SERVICE: The Vendor shall perform the contract in accordance with the specifications and requirements to furnish washing machine and dryer vending service for the Southeastern Auxiliary Services Department.

CONTRACT SUM: The Vendor agrees to pay the State for the contract service provided, the commission rate of _____ percent (_____%) or an annual minimum guaranteed commission of $10,000.00, whichever is greater. Commission rate shall be based on the gross receipts after taxes.

CONTRACT TIME: All service under this contract shall commence the 20 day of July, 2021 and shall terminate by the 19 day of July, 2022.

GOVERNING LAW: This Contract shall be deemed a contract made in Louisiana and shall be governed by the laws of the State of Louisiana.

COMPLETE CONTRACT: This Contract, and any properly executed amendments thereto, the Invitation to Bid and the Vendor's bid response shall constitute the complete and exclusive agreement between the parties and supersedes all prior oral or written agreements of communications relating to the subject matter of the contract.

ACCEPTANCE: In witness whereof, this Contract is executed the day, month and year signed by the State.

_____	SOUTHEASTERN LOUISIANA UNIVERSITY
VENDOR NAME	STATE NAME
_____	_____
SIGNATURE	SIGNATURE John L. Crain
_____	University President
TITLE	TITLE
_____	_____
DATE	DATE

INSURANCE REQUIREMENTS

Vendor shall procure and maintain for the duration of the contract insurance against claims for injuries to persons or damages to property which may arise from or in connection with the performance of the work hereunder by the Vendor, his agents, representatives, employees or subcontractors. The cost of such insurance shall be included in the Vendor's bid.

The Vendor, prior to commencing work, shall provide at his own expense, proof of the following insurance coverage required by the contract to the University in insurance companies authorized in the State of Louisiana. Insurance is to be placed with insurers with an A.M. Best's rating of A-:VI or higher. This rating requirement may be waived for workers' compensation coverage only.

A. Workers' Compensation and Employers Liability: Workers' Compensation limits as required by the Labor Code of the State of Louisiana and Employers Liability coverage.

The insurer shall agree to waive all rights of subrogation against the University, its officers, officials, employees and volunteers for losses arising from work performed by the Vendor for the University.

B. Comprehensive General Liability: $1,000,000 combined single limit per occurrence for bodily injury, personal injury and property damage. "Claims Made" form is unacceptable. The "occurrence form" shall not have a "sunset clause".

The policies are to contain, or be endorsed to contain, that the University, its officers, officials, employees, Boards and Commissions and volunteers are to be added as "additional insureds" as respects liability arising our of activities performed by and on behalf of the Vendor; products and completed operations of the Vendor, premises owned, occupied or used by the Vendor.

C. Automobile Liability: $1,000,000 combined single limit per accident, for bodily injury and property damage.

The policy shall provide coverage for owned, hired, and non-owned coverage. If an automobile is to be utilized in the execution of this contract, and the Vendor does not own a vehicle, then proof of hired and non-owned coverage is sufficient.

D. An Umbrella Policy may be used to meet minimum requirements.

Each insurance policy shall be endorsed to state that coverage shall not be suspended, voided, canceled by either party, reduced in coverage or in limits except after (30) days' prior written has been given to the University.

Any deductibles or self-insured retentions must be declared to and approved by the University. At the option of the University, either: the insurer shall reduce or eliminate such deductibles or self-insured retentions as respects the University, its officers, officials, employees and volunteers; or the Vendor shall procure a bond guaranteeing payment of losses and related investigations, claim administration and defense expenses.

The successful Bidder shall be required
to execute the below Indemnification Agreement as part of the ITB Requirements.

INDEMNIFICATION AGREEMENT

The VENDOR agrees to protect, defend, indemnify, save and hold harmless the State of Louisiana, all State Departments, Agencies, Boards and Commissions, its officers, agents, servants and employees, including volunteers, from and against any and all claims, demands, expenses and liability arising out of injury or death to any person or the damage, loss or destruction of any property which may occur or in any way grow out of any act or omission of VENDOR, its agents, servants, and employees, or any and all costs, expense and/or attorney fees incurred by VENDOR as a result of any claim, demands, and/or causes of action except of those claims, demands, and/or causes of action arising out of the negligence of the State of Louisiana, all State Departments, Agencies, Boards, Commissions, its agents, representatives, and/or employees. VENDOR agrees to investigate, handle, respond to, provide defense for and defend any such claims, demand, or suit at its sole expense and agrees to bear all other costs and expenses related thereto, even if it (claims, etc.) is groundless, false or fraudulent.

_____
Vendor Name

_____
Signature

_____
Title

_____
Date Accepted

Is Certificate of Insurance Attached? [ ] Yes [ ] No

Contract No. _____ for Southeastern Louisiana University
State Agency Name

PURPOSE OF CONTRACT:

Furnish A Washing Machine And Dryer Vending Concession For The Southeastern Auxiliary Services Department