Bid Number 50-00133211

TWO (2) YEAR CONTRACT FOR LABOR, MATERIALS AND EQUIPMENT TO REMOVE EXISTING AND INSTALL NEW THERMOPLASTIC PAVEMENT MARKINGS FOR THE **EAST BANK** OF JEFFERSON PARISH, TRAFFIC ENGINEERING

February 25, 2021 at 2:00 PM

ATTENTION VENDORS!!!

Please review all pages and respond accordingly, complying with all provisions in the technical specifications and Jefferson Parish Instructions for Bidders and General Terms and Conditions. All bids must be received on the Purchasing Department's eProcurement site, www.jeffparishbids.net, by the bid due date and time.

Buyer Name: Melissa Ovalle
Buyer Email: Movalle@jeffparish.net
Buyer Phone: (504) 364-2687

JEFFERSON PARISH

DEPARTMENT OF PURCHASING

CYNTHIA LEE SHENG
PARISH PRESIDENT

RENNY SIMNO
DIRECTOR

September 2020

Changes to Jefferson Parish Bidding Information

The Jefferson Parish Purchasing Department would like to make vendors aware of the following changes:

Total Bid Price Must Include the Cost of Naming Jefferson Parish as Additional Insured: Bidder acknowledges that Bidder recovered the cost of any required insurance in the contract price as required by La.R.S. 9:2780.1 and that Bidder recovered any such cost for the purposes of insuring an obligation to indemnify Jefferson Parish, defend Jefferson Parish, or hold Jefferson Parish harmless and that Bidder's indemnity liability is limited to the amount of the proceeds that are payable under the insurance policy or policies that Bidder has obtained.

Electronic Procurement: Beginning November 1, 2020, Jefferson Parish will no longer accept manual bid submissions; and will only accept bid submissions electronically via our e-Procurement system, Central Bidding. Central Bidding can be accessed by visiting either www.centralbidding.com or www.jeffparishbids.net. All bidders will be required to register with Central Bidding. Jefferson Parish vendors are able to register for free by accessing the following link: https://www.centralauctionhouse.com/registration.php.

Probable Construction Cost: Per Jefferson Parish Administrative Policy, the probable construction cost is not revealed in the Jefferson Parish Bidding Documents. Jefferson Parish Administrative Policy has changed and a range of the probable construction cost will be stated in the Jefferson Parish bidding document, entitled Important Notice to All Bidders – Bid Requirements. Per Louisiana Public Bid Law, the probable construction cost will be read at the bid opening.

Insurance Requirement: All bidders must provide proof of valid insurance in the required amounts as stated in the Standard Insurance Requirements for bidding purposes. Failure to provide the proof of valid insurance in all of the required coverage amounts will result in bid rejection.

GENERAL GOVERNMENT BLDG. – 200 DERBIGNY ST., SUITE 4400, GRETNA, LA 70053
OFFICE 504.364.2678

JOSEPH S. YENNI BLDG. – 1221 ELMWOOD PARK BLVD., SUITE 404, JEFFERSON, LA 70123
OFFICE 504.364.2678
EMAIL: PURCHASING@JEFFPARISH.NET WEBSITE: WWW.JEFFPARISH.NET

JEFFERSON PARISH DEPARTMENT OF ENGINEERING
TRAFFIC ENGINEERING DIVISION
SPECIFICATIONS FOR A TWO (2) YEAR CONTRACT FOR LABOR AND MATERIALS TO REMOVE EXISTING AND FURNISH AND INSTALL NEW THERMOPLASTIC PAVEMENT MARKINGS FOR THE EAST BANK OF JEFFERSON PARISH

LOUISIANA STATE CONTRACTOR'S LICENSE: A Louisiana State Contractor's License is required in the following category:
SPECIALTY: INCIDENTAL HIGHWAY WORK EXCLUDING DRAINAGE, EARTHWORK, LANDSCAPING, AND PAVING

A LA State Contractor's License will be required in accordance with LSA R.S. 37-2150 et. seq. and such license number will be shown on the outside of the bid electronic envelope. Failure to comply will cause the bid to be rejected. When submitting the bid electronically, the license number must be entered in the appropriate field in the electronic procurement system. Failure to comply will cause the bid to be rejected.

BID BOND: A bid bond is required with bid submission in the amount of 5% of the total bid.

PERFORMANCE BOND: A performance bond in the amount of 100% of the contract amount will be required at the signing of the formal contract.

GENERAL NOTES: The following specifications describe the materials required for a two-year contract to provide labor and material to install and /or remove retroreflective pavement marking at various East Bank locations. The locations shall be determined by Jefferson Parish Traffic Engineering Division. The markings shall include but not be limited to: Raised Pavement Markers, Longitudinal Pavement Marking, and Preformed Letters, Legends, Symbols, High Friction Surface Overlays and Modular Lane Separator Systems. All material and legends shall conform to these specifications and to those listed in the Manual of Uniform Traffic Control Devices, 2009 Edition.

As detailed in a written Notice-to-Proceed (NTP) directive, all locations for installation / removal shall be determined by the Jefferson Parish Traffic Engineering Division. Upon notification, the contractor shall mobilize within 14 days after notification and complete the individual job assignment within 30 days or be assessed liquidated damages in the amount of one percent (1%) per day thereafter of the cost of the individual job assignment. After 100 days, the job shall be installed free of charge with the exception of mobilization charges.

LONG LINE DURABLE, RETROREFLECTIVE, PREFORMED, PATTERNED PAVEMENT MARKING REMOVAL

DESCRIPTION: This work shall consist of removing retroreflective preformed patterned pavement markings in accordance with these specifications and in reasonably close conformance to the dimensions and lines shown on the appropriate plans and/or as established by Jefferson Parish Traffic Engineering. All material shall also conform to the Manual of Uniform Traffic Control Devices, 2009 Edition.

MATERIALS: This item is for removal only. No material shall be supplied under this item.

CONSTRUCTION REQUIREMENTS: Existing pavement markings scheduled for removal shall be removed by approved blasting or grinding methods as per NCHRP report 759.

MEASUREMENT: Removal of linear pavement markings will be measured in linear feet completed-in-place for the width specified on the appropriate plans and adjustments thereto. Design quantities may be adjusted if field conditions dictate the necessity to alter the original quantity. Any quantity changes must be approved by Jefferson Parish Traffic Engineering.

Removal of retroreflective pavement letters and symbols will be measured on a per-item-removed basis. Quantities may be adjusted if field conditions dictate the necessity to alter the original design. Any quantity changes must be approved by Jefferson Parish Traffic Engineering.

PAYMENT: Removal of retroreflective preformed pavement markings will be paid for at the contract unit price, which shall be full compensation for removal of markings, and for all materials, labor, tools, equipment and incidentals necessary to complete the work. Payment will be made at contract unit price under:

ITEM NO.	PAY ITEM	PAY UNIT
0010	Removal of existing 4" Solid Longitudinal Marking	linear foot
0020	Removal of existing 4" Broken Longitudinal Marking	linear foot
0030	Removal of existing 8" Solid Longitudinal Marking	linear foot
0040	Removal of existing 8" Broken Longitudinal Marking	linear foot
0050	Removal of existing 12" Solid Transverse Marking	linear foot
0060	Removal of existing 24" Solid Transverse Marking	linear foot
0070	Removal of existing "ONLY" Legend	Each
0080	Removal of existing "SCHOOL" Legend (8')	Each
0090	Removal of existing "SCHOOL" Legend (10')	Each
0100	Removal of existing "R" Legend	Each

HOT APPLIED THERMOPLASTIC PAVEMENT MARKING

DESCRIPTION: This work shall consist of furnishing and installing reflective pavement markings of hot applied thermoplastic or preformed (cold or hot applied) plastic in accordance with this provision and in reasonably close conformance to the dimensions and lines shown on the appropriate plans or as established by Jefferson Parish Traffic Engineering Division. All material shall also conform to the Manual of Uniform Traffic Control Devices, 2009 Edition.
This specification covers a reflectorized thermoplastic pavement striping material that is applied to the road surface in a molten state by mechanical means with surface application of glass beads. The thermoplastic shall be applied by methods as called out in the appropriate plans and immediately followed by application of glass beads. Upon cooling to normal pavement temperatures the resulting traffic marking shall produce a stripe of specified thickness and width that is retroreflective in dry and wet conditions and capable of resisting deformation by traffic.

MATERIALS: The thermoplastic material shall be homogeneously composed of pigment, binder, and glass beads.

The binder shall be based on maleic modified rosin ester resin and high boiling plasticizer. The binder shall be a minimum of 50% maleic modified rosin ester.

The glass beads and filler shall be well dispersed in the resin.

The thermoplastic material shall be free of skins, dirt and foreign debris.

The reflective media shall be made up by the internal and external application of glass beads and shall conform to the following requirements:

- **Glass Beads**- The required beads shall have an index of refraction of 1.5 when tested by immersion method at 25° C (77° F). The glass beads shall have a minimum of 70% rounds as measured according to ASTM D 1155. The surface of the glass beads shall be free of pits and scratches. The glass beads retained on the # 40 US Mesh sieve (425 microns) shall have minimum crush strength of 30 pounds in accordance with ASTM D 1213.
- **Glass beads *(pre-mix)* -** The *pre-mix* beads shall conform to AASHTO M 247 (Type I) and FP96 (Type III) and do not require surface treatment.
    - *Jefferson Parish will accept LADOTD approved material as long as the vendor can prove it is indeed a LADOTD accepted material. Upon request and prior to award of the apparent low bidder must provide a reference number, specification number from the 2016 LA DOTD Standard Specifications for Roads and Bridges book of what material is being proposed to use.*
- **Glass beads *(surface-drop)* -** Glass spheres in the size range of Type 3 shall be surface treated with an adhesion coating. Utah performance specification glass beads may be

dual coated. Bead size distribution shall conform to the requirements stated in the second drop bead gradation, Table 1 below:

Gradation of the Surface Drop of Glass Bead

The gradation of the second drop must meet or be within the limits in Table 1.

Table 1. Gradation of the Surface Drop of Glass Bead

Common bead types with liquid pavement markings Bead Gradations – Mass Percent Passing (ASTM D1214)			
US Mesh	Micron	FP03 718.19 Type 3	Utah Performance Specification
12	1700	100	
14	1410	95-100	
16	1180	80-95	
18	1000	10-40	65-80
20	850	0-5	
25	710	0-2	
30	600		0-30
40	425		
50	300		0-5
70	212		
80	180		
100	150		

**A minimum of 15% of the total weight shall be made from direct melt glass beads.

***All +30 U.S. Mesh beads shall be 85% minimum rounds.

There are many types of glass beads that meet or fit within this range from various manufacturers.

The thermoplastic materials shall have the following characteristics:

- Shall not deteriorate upon contact with pavement materials, petroleum droppings from traffic and chemicals, such as sodium chloride or calcium chloride, used to prevent formation of ice on roadways or streets.
- Shall not scorch, discolor, or deteriorate if kept at the manufacturer's recommended application temperature, or deteriorate if kept at the manufacturers recommended application temperature, or at least 400° F (204.4° C) for 4 hours.
- Has a temperature versus viscosity characteristic that remains constant from batch to batch through 3-4 re-heat cycles.
- The thermoplastic material in the plastic state shall not exude fumes that are toxic, or cause injury to persons or property.
- The thermoplastic shall be supplied in either granular or block form.

The Thermoplastic materials shall have the following composition:

- The pigment, beads and filler shall be uniformly dispersed in the resin. The thermoplastic shall be free of skins, dirt, and foreign objects and shall comply with requirements according to Table 3.

Table 3 - COMPOSITION

All Weather Thermoplastic		
Component	Weight Percent	
	White	Yellow
Binder	18% minimum	18% minimum
Type I Glass Spheres (AASHTO M247, Type I)	30% - 40%	30% - 40%
TI02, Type II Rutile	10% minimum	As needed
Pigment Yellow 83	None	See Note 1
Calcium Carbonate and Intert Filler (200 mesh sieve)	42% Maximum	See Note 1

Note 1- The amount of yellow pigment, calcium carbonate and inert fillers shall be at the option of the manufacturer, providing all other requirements of this specification are met.

- The thermoplastic material shall be produced without the use of lead chromate or arsenic.
- The thermoplastic shall contain clear glass beads as described above.
- The thermoplastic shall be formulated and manufactured from first-grade materials and specifically compounded for traffic markings.
- The thermoplastic shall resist smearing or spreading under normal traffic conditions below 120° F (49° C).
- The finished line shall maintain its original dimensions and placement.
- The finished line shall be free from tack below 120° F (49° C) and is not slippery when wet.
- The thermoplastic line shall be homogenous with even distribution of pigments, and beads throughout the plastic matrix.
- The physical properties of the thermoplastic line shall be uniform throughout the plastic matrix.
- The thermoplastic line shall resist lifting from the pavement in freezing weather and possess cold ductility properties that permit reasonable movement resulting from thermal expansion and contraction with the road surface to minimize chipping or cracking.

The Thermoplastic materials shall have the following physical characteristics:

Storage Life – The thermoplastic material shall meet the requirements of this specification and melt uniformly with no evidence of skins or un-melted particles for a period of one year.

Yellowness Index – Test according to recommendations in ASTM D 4960 and make yellowness index measurements according to ASTM E 1349 using a 2 degree observer and D 65 illuminant. The yellowness index for the white thermoplastic shall not exceed 15.

Set to Bear Traffic– When applied at a temperature range of 412.5 +/- 12.5°F (211 +/- 7° C) and a thickness of 60 mils to 185 mils (1.5mm-4.7mm) the material shall set to bear traffic in not more than 2 minutes when the air and road temperature is 50+/- 3° F. (10+/-2° C) and not more than ten minutes when the air and road temperature is 90 +/- 3° F (32 +/-2° C).

Cracking Resistance at Low Temperature - After heating the thermoplastic for 240 +/-5 minutes at 425° +/-3° F (218° +/- 2° C) and then applying to concrete blocks, and cooling to 15° +/-3.6° F (-9.4° +/-2.0° C) the material shall show no cracks. Ref: (AASHTO T-250-04 section 12).

Impact Resistance - After heating the thermoplastic for 240 +/-5 minutes at 425° +/-3° F (218° +/- 2° C) and making test specimens and testing per ASTM 256, Method A (un-notched), the impact resistance shall be a minimum of 8.8 inch-lbs. (1.0 J) Ref: (AASHTO T-250-04 section 14).

Softening Point - After heating the thermoplastic for 240 +/-5 minutes at 425° +/-3° F (218° +/- 2° C) and testing in accordance with ASTM D 36 the materials shall have a softening point of 215° +/-15° F (102.5° +/-5° C).

Flowability - After heating the thermoplastic for 240 +/-5 minutes at 425° +/-3° F (218° +/- 2° C) and testing for flowability, the white thermoplastic shall have a maximum percent residue of 18 and the yellow thermoplastic shall have a maximum percent residue of 21. Ref: (AASHTO T-250-04 section 11).

Flowability with Extended Heating - After heating the thermoplastic for 8.0 +/- 0.5 hrs. at 425° +/-3° F (218° +/- 2° C), with stirring the last 6 hrs., and testing for flowability, the thermoplastic shall have a maximum percent residue of 28. Ref: (AASHTO T-250-04 section 17).

Flash Point – When tested in accordance with ASTM D 92 the thermoplastic will have a flash point not less than 475° F (248° C).

Indentation Resistance – Test according to ASTM D 2240 Shore Durometer, A2. Durometer and panel at 110° F (43.3° C) with a 4.4 lb load applied. Measurement is taken after 15 seconds. The thermoplastic should have a minimum value of 40 and a maximum value of 75. **Note:** Extra care should be taken to ensure the intermix is thoroughly mixed and uniform in the test samples. A non-uniform sample will result in erratic measurement values.

- **Note:** During measurement of thermoplastic containing large glass beads the durometer probe may impact a large bead during the test resulting in a much higher than expected result. If the value is unreasonably high, it may be necessary to retest in another location on the sample.

Specific Gravity – Test according to ASTM D 153. The thermoplastic should have a minimum no less than 1.9 maximum of no more than 2.3.

Water Absorption - Test according to ASTM D 570. The thermoplastic sample should have a maximum of 0.5% water absorption.

Ultra Violet Light and Condensate Exposure – Make samples and test according to ASTM G 154. After 300 hrs. exposure the thermoplastic samples shall meet the requirements below.

Color – Make and test thermoplastic samples according to ASTM D 4960. Make color measurements according to ASTM D 6628-03 using a 2 degree observer and D 65 illuminant. The thermoplastic material, after heating for 240 +/-5 minutes at 425° +/ 3° F (218° +/- 2° C) and then cooled to 77° +/-3° F (25° +/ 2° C) shall meet the following criteria:

- **White Reflectance:** Daylight reflectance *(Cap Y)* measured at 45/0 degrees is 75% minimum.
- **White Color:** The color shall reasonably match Federal Test Standard number 595B, color 17886 and shall be within the following chromaticity limits "color box" defined by plotting the following four (x,y) pairs on a C.I.E. 1931 chromaticity diagram.

  (x1,y1) = (0.355, 0.355)
  (x2,y2) = (0.305, 0.305)
  (x3,y3) = (0.285, 0.325)
  (x4,y4) = (0.335, 0.375)

- **Yellow Reflectance:** Daylight reflectance (*Cap Y*) measured at 45/0 degrees is 45% minimum.
- **Yellow Color**: The color shall reasonably match Federal Test Standard number 595B, color 13538 and shall be within the following chromaticity limits "color box" defined by plotting the following four (x,y) pairs on a C.I.E. 1931 chromaticity diagram.

  (x1,y1) = (0.560, 0.440)
  (x2,y2) = (0.490, 0.510)
  (x3,y3) = (0.420, 0.440)
  (x4,y4) = (0.460, 0.400)

Retroreflectance – Typical initial retroreflectance are shown in the Table 4 below. Typical retroreflectivity averaged over many readings [mcd(ft-2)(fc-1)] metric equivalent [mcd(m-2)(lux-1)]

Jefferson Parish fully intends to use the retroreflectivity numbers in the table below.

Table 4

Typical Initial Retroreflectivity* Average values over many applications (mcd (ft-2) (fc-1) ; {metric equivalent mcd (m-2) (lux-1)}		
	White	**Yellow**
Dry (ASTM E1710)	900	700
Wet recovery (ASTM E2177)	345	280
Wet Continuous (ASTM E2176)	125	90

*Note : Typical Retroreflectivity results represent average performance for smooth pavement surfaces. Results may vary due to differences in pavement type and surface roughness. Increased element drop rate may be necessary to compensate for increased surface area characteristics of rough pavement surfaces.

Some reasonable variance should be expected (for example, application on very rough road surfaces or differences in glass beads).

The initial retroreflectance of a single installation shall be the average value determined to the measurement and sampling procedures outlined in ASTM D 6359, using a 30-meter (98.4 feet) retrofeflectometer. RL shall be expressed in units of millicandelas per square foot per foot-candle [mcd(ft-2)(fc-1)] metric equivalent [mcd(m-2)(lux-1)].
Initial performance of pavement marking shall be measured no sooner than 4 - 7 days after application.

Wet retroreflectance values measured under a "condition of continuous wetting" (simulated rain) shall be in accordance with ASTM E2176, and to reduce variability between measurements, the test method shall be performed in a controlled laboratory environment while the marking is positioned with a 3 to 5 degree lateral slope. Measurements shall be reported as the average of the minimum of three locations. Samples of the completed finished product shall be applied to flat panels during application and brought back to the lab for testing.

- *Jefferson Parish will accept LADOTD approved material (RETRO NUMBERS AND BEAD PACKAGES) as long as the vendor can prove it is indeed a LADOTD accepted material. Upon request and prior to award of the apparent low bidder must provide a reference number, specification number from the 2016 LA DOTD Standard Specifications for Roads and Bridges book of what material is being proposed to use.*
- *The awarded bidder will be responsible for wet recovery and wet continuous readings.*

On The Road Track-Free Time – When applied at a temperature range of 412.5° +/- 12.5° F (211° +/- 7° C) and a thickness of 60 mils to 185 mils (1.5mm-4.7mm) the material shall set to bear traffic in not more than 2 minutes when the air and road temperature is 50° +/- 3° F. (10° +/-2° C) and not more than ten minutes when the air and road temperature is 90° +/- 3° F (32° +/-2° C).

- **Track Free** - shall be considered as the condition where no visual deposition of the traffic marking to the pavement surface is observed when viewed from a distance of 50 feet, after a free-rolling traveling vehicle's tires have passed over the line.

Color After Application – The color of the applied white and yellow stripes and markings (with beads) shall conform to the daytime and nighttime color requirements in ASTM Designation: D 6628-03.

- **White Reflectance:** Daylight reflectance *(Cap Y)* measured at 45/0 degrees is 35% minimum.

- **White Color:** The color shall reasonably match Federal Test Standard number 595B, color 17886 and shall be within the following chromaticity limits "color box" defined by plotting the following four (x,y) pairs on a C.I.E. 1931 chromaticity diagram.
  (x1,y1) = (0.355, 0.355)
  (x2,y2) = (0.305, 0.305)
  (x3,y3) = (0.285, 0.325)
  (x4,y4) = (0.335, 0.375)

- **Yellow Reflectance:** Daylight reflectance (*Cap Y*) measured at 45/0 degrees is 25% minimum.

- **Yellow Color**: The color shall reasonably match Federal Test Standard number 595B, color 13538 and shall be within the following chromaticity limits "color box" defined by plotting the following four (x,y) pairs on a C.I.E. 1931 chromaticity diagram.
  (x1,y1) = (0.560, 0.440)
  (x2,y2) = (0.490, 0.510)
  (x3,y3) = (0.420, 0.440)
  (x4,y4) = (0.460, 0.400)

CONSTRUCTION REQUIREMENTS: Equipment

Equipment shall be capable of providing uniform heating of striping materials to temperatures exceeding 390° F (199° C).

Equipment shall be capable of mixing and agitating the molten thermoplastic to provide a homogenous mixture and prevent settling of intermixed beads and elements.

Equipment shall be capable of maintaining the thermoplastic striping material in a plastic state in all mixing and conveying parts, including the line dispensing device until applied.

Equipment shall be capable of producing varying widths and thickness of thermoplastic traffic stripes.

The equipment shall be a mobile, truck mounted and self –contained pavement marking machine or a walk behind hand cart applicator with an accompanying mobile pre-meter.

Mobile truck mounted applicators shall be capable of traveling at a uniform, predetermined speed over variable road grades to produce uniform application of striping material, following straight lines and making normal curves in a true arc. The equipment shall be capable of air-blasting the pavement, applying the thermoplastic stripe and immediately dropping the glass beads in a single pass at speeds up to 8 mph.

Hand cart applicators shall be capable of uniform application of striping material at walking speeds, following straight lines and making tight turns symbols and legends. Mobile equipment must be available to air blast the areas immediately prior to hand cart application of thermoplastic. The hand cart shall be capable of applying the thermoplastic stripe and immediately dropping the glass beads in a single pass at walking speeds.

The equipment shall be capable of application of glass beads to the surface of the pavement marking by double drop application. The bead dispenser shall be attached to the striping machine in such a manner that the beads are dispensed immediately.

- The applicator for the glass beads shall be equipped with an automatic cut-off control that is synchronized with the cut-off of the thermoplastic material.
- The applicator for the glass beads shall be capable of delivering a uniform drop rate at variable thermoplastic application speeds.
- The glass spheres are applied such that they appear uniform on the entire traffic stripe and markings.
- The glass beads are applied such that they are embedded 50%-60% for adhesion to the thermoplastic marking.
- The melt kettle must be equipped with an automatic temperature control device and thermometer to thermostatically control the temperature and prevent overheating of the thermoplastic material. It must also be equipped with sufficient agitation to prevent settling of the beads.
- The equipment must meet the requirements of the National Fire Protection Association and state and local authorities.

Application Conditions
Application of markings will not be permitted when there is excessive pavement moisture or when the surface temperature or ambient temperature is below 50°F (10°C) for 90 mil (2.3 mm) or greater applications and 55°F (13°C) for 40 mil (1.0 mm) applications. The pavement shall be considered excessively moist when it is visibly wet or when a 1 square foot (0.1 sq m) piece of polyethylene film condenses moisture after being placed on the pavement surface for 15 minutes.

Surface preparation – Marking operations shall not begin until applicable surface preparation work is completed and approved by the engineer.

Prior to marking application, the contractor shall:

1. Remove any markings that show obvious signs of degradation and/or loss of adhesion.
2. Remove all curing compounds on new Portland cement concrete surfaces.
3. Remove all dirt, sand, dust, oil, grease, loose beads and any other contaminants from the road surface.

Application Plan
Reflectorized markings shall be placed only on properly prepared surfaces and at the widths, thickness and patterns as designated on the contract plans.

Markings shall be applied in accordance with the Manual on Uniform Traffic Control Devices, 2009 edition, and in accordance with the appropriate plans.

Restrictions - The Traffic Engineering Division and /or contractor shall determine further restrictions and requirements of weather and pavement conditions necessary to meet all application specifications and produce markings that perform to the satisfaction of the engineer. If the pavement surface contains heavy tines or very large aggregate used in open grade friction course or stone matrix asphalt mixes it may require additional surface preparation prior to application of thermoplastic pavement markings.

Thickness – The thermoplastic binder shall be applied to the proper thickness per the project plans.

Reflective media application – The specified reflective media shall be dropped at rates to achieve the following coating weights in Table 5.

Table 5 Glass Bead Application Rates

Units	Utah Beads*	Type 3
Pounds per 4-inch linear foot	0.048	0.026
Grams per 4-inch linear foot	22	12
Pounds per 100 sq ft	14.4	7.8
Grams per square meter	710	388

*Utah or FP03# 718.19 Type 3

Adhesion – The contractor shall ensure that the thermoplastic marking is well adhered to the road surface, and that the glass spheres are well adhered to the binder with 50% to 60% embedment.

INSPECTION AND TESTING - At any time throughout the duration of the project, the contractor shall provide free access to his application equipment for inspection by the Traffic Engineering Division, their authorized representative, or a materials representative.

MEASUREMENT: Linear pavement markings will be measured in linear feet complete-in-place for the width specified. Legends, words, and other markings will be measured per-unit installed.

When materials are found to be non-conforming, the material supplier shall provide replacement materials at no cost.
When the fault of non-conformance with the specification is indeterminate or in dispute, the materials supplier shall provide replacement materials and the contractor shall repair the marking, both at no cost to the Traffic Engineering Division and/or Jefferson Parish.

PAYMENT: Reflectorized thermoplastic pavement striping material will be paid for at the contract unit price, which shall be full compensation for cleaning and preparing the pavement surface, for furnishing and placing all materials, and for all materials, labor, tools, equipment and incidentals necessary to complete the work. Payment will be made at contract unit price under:

ITEM NO.	PAY ITEM	PAY UNIT
0110	Left Arrow Pavement Marking	Each
0120	Straight Arrow Pavement Marking	Each
0130	Right Arrow Pavement Marking	Each
0140	Right/Straight Arrow Pavement Marking	Each
0150	Left/Straight Arrow Pavement Marking	Each
0160	"ONLY" Legend Pavement Marking	Each
0170	"R" Legend Pavement Marking	Each
0180	8' "SCHOOL" Legend Pavement Marking	Each
0190	10' "SCHOOL" Legend Pavement Marking	Each
0200	4" Solid Yellow Longitudinal Pavement Marking (asphalt)	linear foot
0210	4" Solid Yellow Longitudinal Pavement Marking (concrete)	linear foot
0220	4" Solid White Longitudinal Pavement Marking (asphalt)	linear foot
0230	4" Solid White Longitudinal Pavement Marking (concrete)	linear foot
0240	4" Broken Yellow Longitudinal Pavement Marking (asphalt)	linear foot
0250	4" Broken Yellow Longitudinal Pavement Marking (concrete)	linear foot
0260	4" Broken White Longitudinal Pavement Marking (asphalt)	linear foot
0270	4" Broken White Longitudinal Pavement Marking (concrete)	linear foot
0280	8" Solid Yellow Longitudinal Pavement Marking (asphalt)	linear foot
0290	8" Solid Yellow Longitudinal Pavement Marking (concrete)	linear foot

0300	8" Solid White Longitudinal Pavement Marking (asphalt)	linear foot
0310	8" Solid White Longitudinal Pavement Marking (concrete)	linear foot
0320	8" Broken Yellow Longitudinal Pavement Marking (asphalt)	linear foot
0330	8" Broken Yellow Longitudinal Pavement Marking (concrete)	linear foot
0340	8" Broken White Longitudinal Pavement Marking (asphalt)	linear foot
0350	8" Broken White Longitudinal Pavement Marking (concrete)	linear foot
0360	12" Solid Transverse Pavement Marking (asphalt)	linear foot
0370	12" Solid Transverse Pavement Marking (concrete)	linear foot
0380	24" Solid Transverse Pavement Marking (asphalt)	linear foot
0390	24" Solid Transverse Pavement Marking (concrete)	linear foot

DURABLE, RETROREFLECTIVE, PREFORMED, CONTRAST PATTERNED PAVEMENT MARKINGS

DESCRIPTION: This work shall consist of furnishing and installing retroreflective preformed patterned high contrast pavement markings in accordance with this provision and in reasonably close conformance to the dimensions and lines shown on the plans or established by the engineer.

MATERIALS: The preformed patterned contrast markings shall consist of white or yellow films with glass beads incorporated to provide immediate and continuing retroreflection and a black preformed patterned film border, bonded to the edges to form a continuous roll. These films shall be manufactured without the use of lead chromate pigments or other similar, lead-containing chemicals.

The total width of the preformed contrast tape shall be an additional three inches wider than the standard width specified. This additional three inch width shall be a black non-reflective film with one and a half inches on both sides of the white or yellow film.

The preformed markings shall be capable of being adhered to light-colored asphalt cement concrete (ACC) or Portland Cement concrete (PCC) by a pre-coated pressure sensitive adhesive. A surface preparation adhesive may be used to precondition the pavement surface. The preformed contrast markings shall conform to pavement contours by the action of traffic. The pavement marking also shall be capable of application on new, dense and open grade asphalt concrete wearing courses in accordance with the manufacturer's instructions. Following proper surface preparation, application, and tamping, the markings shall be immediately ready for traffic. The bidder shall identify proper surface preparation adhesive (where necessary) to be applied at the time of application, all equipment necessary for proper application, and recommendations for application that will assure effective product performance. The preformed contrast markings shall be suitable for use for one year after the date of receipt when stored in accordance with the manufacturer's recommendations.

The contrast marking shall consist of higher durable, retroreflective white or yellow pliant polymer materials with durable matte black, non-reflective pliant polymer borders. This

material shall be designed for typical longitudinal pavement marking configurations such as lane lines (skip lines), edge lines, and gore markings.

The retroreflective, patterned pliant polymer pavement markings shall consist of a mixture of high-quality polymeric materials, pigments and glass beads distributed throughout its base cross-sectional area, with a reflective layer of beads bonded to a durable polyurethane topcoat surface. The patterned surface shall have approximately 50% + or - 15% of the surface area raised and presenting a near vertical face (ß angle of 0° to 60°) to traffic from any direction. (See diagram below.) The channels between the raised areas shall be substantially free of exposed beads or particles.

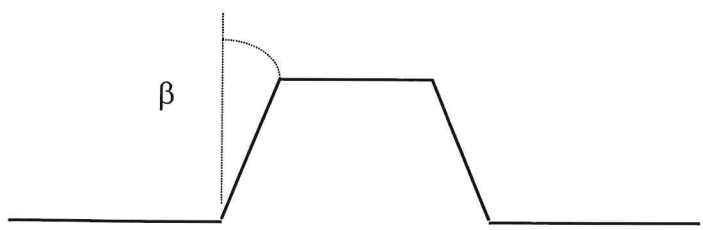

The white and yellow portion of the markings shall have the following initial expected retroreflectance values as measured in accordance with the testing procedures of ASTM D4061. The photometric quantity to be measured shall be coefficient of retroreflected luminance (R_L) and shall be expressed as millicandelas per square foot per foot-candle [(mcd • ft^{-2}) • fc^{-1}]. The metric equivalent shall be expressed as millicandelas per square meter per lux [(mcd • m^{-2}) • lx^{-1}]. The test distance shall be 98.4 feet (30 m).

TABLE 1
EXPECTED INITIAL RETROREFLECTANCE

	WHITE	YELLOW
Entrance Angle	88.76°	88.76°
Observation Angle	1.05°	1.05°
Retroreflected Luminance R_L [(mcd • ft^{-2}) • fc^{-1}]*	500	300

*These retroreflectance values are based on dark room photometric readings per ASTM D4061.

Note: The test instrument shall use an Entrance Angle of 88.76° and Observation Angle of 1.05° which represent a simulated driver viewing geometry at a 30 meter distance.

Beads: Index of Refraction: The glass beads mixed into the pliant polymer shall have a minimum index of refraction of 1.5 when tested by the liquid oil immersion method.

The size and quality of the beads shall be such that the performance requirements for the retroreflective pliant polymer shall be met.

Acid Resistance: The beads shall show resistance to corrosion of their surface after exposure to a 1% solution (by weight) of sulfuric acid. The 1% acid solution shall be made by adding 5.7cc of concentrated acid into 1000cc of distilled water. CAUTION: Always add the concentrated acid into the water, not the reverse.

The preformed markings shall consist of white and yellow films with pigments selected and blended to conform to standard highway colors and a black preformed patterned film border.

The patterned surface of the retroreflective pliant polymer shall provide an initial average skid resistance value of 45 BPN when tested according to ASTM E303 except values shall be taken in one direction and then at a 45° angle from that direction. These two values shall then be averaged to find the skid resistance of the patterned surface.

The pavement marking material shall be capable of use for patching worn areas of the same type in accordance with manufacturer's instructions.

The patterned material without adhesive shall have a minimum caliper of 0.065" (1.651mm) at the thickest portion of the patterned cross-section and a minimum caliper of 0.02" (.508mm) at the thinnest portion of the cross-section.

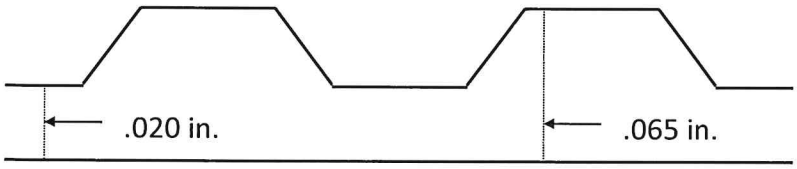

Warranty

The manufacturer shall warrant that pavement marking material sold for this application in the United States and Canada will remain effective for its intended use under normal traffic conditions and meet the minimum retained coefficient of retroreflection value of 100 millicandelas per foot squared per foot-candle (measured at 1.05° observation and 88.76° entrance angles) subject to the following provisions:

TABLE 2

APPLICATION*	WARRANTY PERIOD
Longitudinal Markings	4 years
Words and Symbols	2 years

If the markings are applied in accordance with all the manufacturer's application recommendations and fail during the warranty period to retain the minimum reflectance values, fail to adhere to the roadway, or fail due to complete wear-through during the warranty period shown above (from the date of installation), the manufacturer's sole responsibility and purchaser's and user's exclusive remedy shall be:

The manufacturer will provide the replacement materials that will restore the pavement marking retroreflectivity values to warranty levels or greater.

Conditions

Such failure must be solely the result of design or manufacturing defects in the pavement marking material and not of outside causes such as improper installation or substrate failure. Failure to follow recommended application procedures will void this warranty.

A visual night inspection must be made with a manufacturer's representative and a customer representative present to identify areas of the installation which appear to be below the minimum retained reflectance values of 100 millicandelas per foot squared per foot-candle. Areas which appear to be below the minimum retained reflectance value shall be identified as "zones of measurement." To qualify for material replacement, a "zone" must be at least 360 feet in road length and consist of either edge lines, center lines or lane lines, but not in combination, or a single word or symbol marking. Detailed reflectance measurement procedures are provided in the product bulletin provided by the manufacturer.

CONSTRUCTION REQUIREMENTS: The markings shall be applied in accordance with the manufacturer's installation instructions. Marking configurations shall be in accordance with the current edition of the Manual on Uniform Traffic Control Devices.

When markings are specified in the contract for newly paved asphalt concrete surfaces, they shall be applied before public traffic is allowed on the freshly paved surface. Preferably, the markings should be inlaid in the fresh surface during final rolling of the mat, but in any case they shall be applied before the close of the shift on the day which the surface is paved. These markings can also be overlaid on existing pavement surfaces in accordance with the manufacturer's installation instructions.
Linear pavement markings will be measured in linear feet complete-in-place for the width specified.

MEASUREMENT: Linear pavement markings will be measured in linear feet complete-in-place for the width specified

PAYMENT: Retroreflective preformed pavement markings will be paid for at the contract unit price, which shall be full compensation for cleaning and preparing the pavement surface, for furnishing and placing all materials, and for all materials, labor, tools, equipment and incidentals necessary to complete the work.

Payment will be made under:

ITEM NO.	PAY ITEM	PAY UNIT
0400	4" Solid White Longitudinal Pavement Marking (concrete)	linear foot
0410	4" Broken White Longitudinal Pavement Marking (concrete)	linear foot
0420	8" Solid White Longitudinal Pavement Marking (concrete)	linear foot
0430	8" Broken White Longitudinal Pavement Marking (concrete)	linear foot

DURABLE, ABRASION-RESISTANT, RETROREFLECTIVE RAISED PAVEMENT MARKERS

DESCRIPTION: This work shall consist of furnishing and installing durable, abrasion-resistant, retroreflective raised pavement markers designed for installation on asphalt and portland cement concrete road surfaces. The markers shall be designed to provide highly effective, long-life nighttime visibility.

MATERIALS: The marker shall be produced from an engineering polymer selected for superior impact resistance and weatherability. The color of the marker body shall be either neutral white or as specified. The marker shall incorporate an abrasion-resistant, retroreflective element designed to provide long-lasting nighttime visibility. These markers are intended for application directly onto asphalt or Portland concrete pavement surfaces and shall be compatible with commercially available bitumen or epoxy resin adhesives designed for use with raised pavement markers and as recommended by the marker manufacturer. All other adhesives must be tested by the user to determine suitability.

The markers shall be durable, impact and abrasion-resistant, retroreflective raised pavement markers designed for use with longitudinal and gore markings on new and existing roads in non-snow plow regions.

The marker shall be installed by use of a non-toxic, zero V.O.C., preformed thermoplastic adhesive Bundy pad designed to adhere raised pavement markers to the road surface when heated with a torch. (5" x 5", 125-mil thick squares) *OR other products such as bituminous adhesive, or equal.*

The marker shall meet the following specified requirements:

The marker body shall be produced in neutral white or as specified. The color of the retroreflective element shall be white, yellow, red, green or blue as specified.

Dimensions: The typical dimensions of the marker shall be:

Height: 0.625 ± 0.050 in. (15.88 ± 1.27mm)

Width: 4.00 ± 0.50 in. (101.6 ± 12.7mm)

Length: 3.50 ± 0.50 in. (89.2 ± 12.7mm)

The white/red, and yellow/amber markers shall have initial minimum retroreflectance values specified as the product of the values in Table 1 when measured in accordance with ASTM E809. The photometric quantity to be measured is the coefficient of retroreflected luminous intensity (RI), expressed as millicandelas per lux (mcd/lx). One candela per lux equals 10.76 candelas per foot-candle.

Table 1: Minimum RI Values

Entrance angle β_2 ($\beta_1 = 0°$)	0°		±20°	
Observation angle	.2°		.2°	
Color	Minimum R_I (mcd/lx)	Minimum R_I (cd/ftcd)	Minimum R_I (mcd/lx)	Minimum R_I (cd/ftcd)
White	279	3.00	112	1.20
Yellow/Amber	167	1.80	67	0.72
Red	70	0.75	28	0.30
Blue	26	0.28	10	0.11
Green	93	1.00	37	0.40

The markers shall have initial minimum retroreflectance values specified as the product of the values in **Table 2 and Table 3** when measured in accordance with ASTM E809. In **Table 2**, the angles referenced correspond to the entrance, rotation and observation geometry for a driver in a standard vehicle with pavement markers placed on a lane line to the left of the vehicle. The measured value at each simulated distance is the sum of the marker retroreflection from the

incident illumination of the left and right headlights. Test set up and measurement geometry is illustrated in **Figure 1**.

Table 2: R_I "Driver Geometry"

Simulated Distance			Observation Angle (α)	Rotation Angle (ε)	Entrance Angle (ß)		Minimum R_I (mcd/lux)	Typical R_I (mcd/lux)
Feet	Meters	Headlight	(degrees)	(degrees)	$ß_1$	$ß_2$	left + right	left + right
100	30	Left	0.95	19	-2.0	-1.6	40	80
		Right	2.91	-72	4.6	-2.9		
300	91	Left	0.35	24	-0.7	-0.5	350	500
		Right	0.90	-69	1.4	-1.0		
500	152	Left	0.22	24	-0.4	-0.3	600	1000
		Right	0.53	-68	0.8	-0.6		

Note: In laboratory testing Entrance Angles $ß_1$ and $ß_2$ are set to equal 0° and Left/Right Rotation Angles ε are set to 20°/-70° as an approximation with little loss of accuracy.

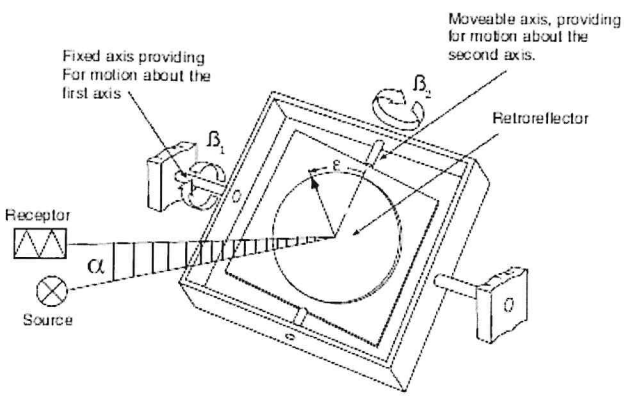

Figure 1: Driver Geometry (CIE Notation)

Table 3: Color Multiplying Factors

Color	Multiplying Factor
White	1
Yellow/Amber	0.6
Red	0.25
Blue	0.1
Green	0.33

The retroreflected color of the markers shall lie within the respective retroreflected color gamut coordinates, plotted on the 1931 CIE Chromaticity (x,y) diagram, described in Table 4 and Figure 2 when tested in accordance with ASTM E811 using CIE Illuminant Source A and viewing conditions of 0.2° observation angle, 0° entrance angle. The source and receptor angular apertures are each 6 minutes of arc.

Table 4: Retroreflected Color Gamut Coordinates

	White		Yellow		Red		Blue		Green	
Point Number	x	y	x	y	x	y	x	y	x	y
1	0.310	0.348	0.545	0.424	0.650	0.330	0.039	0.320	0.009	0.733
2	0.453	0.440	0.599	0.439	0.668	0.330	0.160	0.320	0.288	0.520
3	0.500	0.440	0.609	0.390	0.734	0.265	0.160	0.240	0.209	0.395
4	0.500	0.380	0.597	0.390	0.721	0.259	0.183	0.218	0.012	0.494
5	0.440	0.380	–	–	–	–	0.088	0.142	–	–
6	0.310	0.283	–	–	–	–	–	–	–	–

If two points lie on the spectrum locus line, they must not be connected by a straight line but rather should, in this case, be joined by the boundary of the spectrum locus.

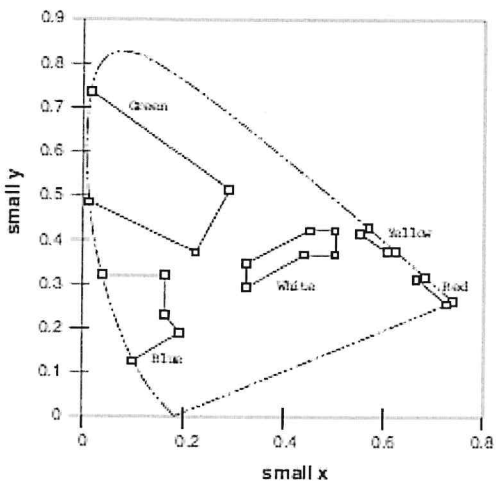

Figure 2: CIE 1931 Chromaticity Chart

The coefficient of retroreflected luminous intensity of the markers is measured after subjecting the entire lens surface to the test described in ASTM D 4280 section 9.5 using a sand drop apparatus. After the exposure described above, retroreflected values shall not be less than 0.5 times the values listed in Table #1.

The marker shall comply with the initial minimum brightness requirements as specified in **Table 1** and the product of the values in **Tables 2 and 3** after conditioning for 12 hours at 145°F ± 5°F (62.7°C ± 2.5°C).

The marker body shall display no cracking or breakage when tested according to ASTM D2444 Tup A, using a 1000 gm weight from a height of 1 meter. The marker shall be positioned in such a way that the Tup strikes the top of the marker. The marker lens shall display no cracking outside the impact area when tested according to ASTM D2444 Tup A, using a 1000 gm weight from a height of 1 meter. The marker shall be placed in a steel fixture designed to hold the marker lens horizontal and positioned such that the Tup strikes the center of the lens.

The markers shall be conditioned for 10 minutes at 145°F ± 5°F (62.7°C ± 2.5°C) and then immediately submerged in a water bath at 70°F ± 5°C (21°F ± 2.5°C) for 10 minutes. The markers should then be removed from the water bath, wiped dry with a soft cloth, visually

inspected for penetration of water behind the lens, and measured for reflectivity in accordance with ASTM E809. The markers shall meet the initial minimum retroreflectance specified values in **Table 1** and the product of the values in **Tables 2 and 3.**

The markers shall meet the performance requirements contained in the current ASTM D 4280 for Raised Retro-reflective Pavement Markers. This warranty excludes (without limitation) damage from improper installation, exposure to chemicals or mishandling. Should the marker fail to conform to this warranty, the manufacturer shall, at its expense for materials ONLY, furnish replacement markers for those non-conforming markers. Jefferson Parish Traffic Engineering Division will maintain and track all installation information.

CONSTRUCTION REQUIREMENTS: All markers shall be applied in accordance with the manufacturer's recommendations. Marker configurations shall be in accordance with the current edition of the "Manual on Uniform Traffic Control Devices."

MEASUREMENT: Raised pavement markers shall be counted as applied markers.

PAYMENT: Raised pavement markers shall be paid for at the contract unit price, which shall be full compensation for cleaning and preparing the pavement surface for furnishing and placing all materials, and for all materials, labor, tools, equipment and incidentals necessary to complete the work.
Payment will be made under:

ITEM NO.	PAY ITEM	PAY UNIT
0440	White / Red Raised Pavement Marker	Each
0450	Yellow Raised Pavement Marker	Each
0460	Removal of Raised Pavement Markers	Each

HIGH FRICTION ROADWAY SURFACE TREATMENT

DESCRIPTION: This work shall consist of furnishing and applying a high friction surfacing system on roadways in accordance with this specification and the lines and details shown on the appropriate plans. The contractor shall ensure the manufacturer's representative is present at the construction site to train Department and Contractor personnel before placing the surface treatment and shall remain available during application as necessary.

MATERIALS:

A. **GENERAL:** The high friction surface treatment shall contain an epoxy binder capable of retaining a bauxite aggregate topping under vehicular traffic conditions.

B. **EPOXY BINDER:** The binder shall be a two-part exothermic epoxy resin binder which holds the aggregate firmly in position, and meets the requirements of Table 1.

Table 1
Epoxy Binder Requirements

Property	Requirement	Test Method
Ultimate Tensile Strength, psi	2,800 minimum	ASTM D638
Compressive Strength, psi	1,600 minimum	Tex-614-J, Part 3
Gel Time, min	10 minimum	Tex-614-J, Part 7
Peak Exothermic Temperature, °F	150 minimum	Tex-614-J, Part 7[1]
Water Absorption, %	0.25 maximum	Tex-614-J, Part 19
Shore Hardness	70 minimum	ASTM D2240
Viscosity, cP	3,000 minimum	Tex-614-J, Part 4
Bleed Test	Trace	ASTM D969
Dry-to-touch time, hours	3 maximum	ASTM D 1640, 5 mil thickness
Mixing Ratio	As recommended by manufacturer	n/a

[1]Addition to Tex-612-J, Paragraph 7.1.2.4: Insert a temperature probe into the center of the sample and record the temperature changes through the end of the test. Paragraph 7.1.2.6: Record the highest temperature reached as the Peak Exothermic Temperature.

A. **AGGREGATE TOPPING:** The aggregate topping shall be a bauxite consisting of a 1-3 mm gradation. The aggregate shall be delivered to the construction site in clearly labeled 55 lb bags or 2200 lb super sacks. The aggregate shall be clean, dry, and free from foreign matter. The aggregate shall meet the requirements of Table 1.

Table 1
Aggregate Requirements

Property	Requirement	Test Methods
Aggregate Abrasion Value	10% max	LA Abrasion Test ASTM C131 Grading D
Aggregate Grading	No. 6 Sieve Size	95% min passing
	No. 16 Sieve Size	5% max passing
Aggregate Acid Insolubility	Greater than 90%	Tex-612-J
Aggregate Magnesium Soundness	30% max	Tex-411-A, (Stockpile gradation)

B. **CERTIFICATION:** Certification shall be submitted upon request by the Department and prior to award. An independent laboratory report shall be provided showing that the epoxy binder meets the requirements of this section. Certification shall be submitted from the manufacturer that the aggregate topping meets the above requirements. Documentation of the in-place friction characteristics (minimum 65 FN40R in accordance with ASTM E274) of aggregate bonded to a vehicular bearing surface using the modified epoxy binder shall be submitted.

CONSTRUCTION:

A. **GENERAL:** The two-part modified epoxy binder shall not be applied on a wet surface, when the ambient or surface temperature is below 40°F or above 105°F, or when the anticipated weather conditions would prevent the proper application of the surface treatment as determined by the manufacturer's representative.

B. **PREPARATION:** The contractor shall ensure that the roadway surface is clean, dry, and free of dust, oil, debris, and any other material that might interfere with the bond

between the epoxy binder material and the roadway surface. Adequate cleaning of surfaces will be determined by the manufacturer's representative.

The contractor shall protect utilities, drainage structures, curbs, and any other structure within or adjacent to the treatment location against the application of the surface treatment materials. The contractor shall cover and protect existing pavement markings that are adjacent to the application surfaces as directed. The contractor shall remove existing or temporary pavement markings that conflict with the surface application in accordance with Item 677, "Eliminating Existing Pavement Markings and Markers," except for Measurement and Payment, and sweep the surface clean before applying to the epoxy binder.

The contractor shall pre-treat joints and cracks greater than ¼ inch in width and depth with the mixed epoxy specified in this specification. Once the epoxy in the pre-treated areas has gelled, the high friction epoxy binder and aggregate topping installation may proceed.

For applications on new pavements, the contractor shall install the high friction epoxy binder and aggregate topping a minimum of 30 days after placing the underlying and adjacent asphalt pavement to reduce the likelihood of "tracking."

C. **MIXING AND APPLICATION OF EPOXY BINDER AND AGGREGATE WEARING COURSE:** One of the following methods shall be utilized for the application of the epoxy binder and aggregate wearing course, as shown in the appropriate plans.

1. **HAND MIXING AND APPLICATION:** The two-part modified epoxy base binder components shall be proportioned (Part A and Part B), to the correct ratio, as recommended by the manufacturer, and mixed using a low speed, high torque drill fitted with a helical stirrer. This method shall be used for low volume application areas such as intersections, areas less than 250 feet in length, or where truck-mounted application machines are not applicable to the specified locations because of logistical restrictions. The mixed components shall be hand-applied onto a prepared pavement surface at an application coverage rate of 20 – 30 sq.ft. per gallon. The hand-applied base binder shall be uniformly spread onto the substrate surface using a serrated edge squeegee. The high friction surfacing aggregate shall be immediately spread onto the two-part modified epoxy base binder, at a minimum rate of 13 lbs/sq.yd.

2. **MECHANICAL MIXING AND APPLICATION:** The two-part modified epoxy base binder shall be applied by using a truck-mounted application machine onto the pavement section to be treated in varying widths of up to 8 ft wide at a uniform application thickness. Operations shall be conducted in such a manner that will not allow the epoxy base binder material to separate in the mixing lines, cure,

dry, or otherwise impair retention bonding of the high friction surfacing aggregate. The mixed components shall be applied mechanically onto the prepared pavement surface at a minimum coverage rate of 15 gal/min with a uniform thickness of 60 mils onto the pavement surface. The high friction surfacing aggregate shall immediately be spread onto the installed two-part modified epoxy base binder, at a minimum rate of 13 lbs/sq yd coverage. The high friction surfacing aggregate shall be mechanically applied to varying widths of up to 8 ft wide in a uniform, continuous application.

For either methods 1 or 2, the contractor shall not use vibratory or impact-type compaction on the aggregate after placement. Only lightweight rollers shall be used to seat the aggregate topping. Complete coverage of the "wet" epoxy binder with aggregate is necessary to achieve a uniform surface. No exposed visible wet spots shall be allowed once the aggregate is placed.

D. **CURING:** The high friction aggregate-topped epoxy binder shall be allowed to cure in accordance with the manufacturer's recommendations for approximately 2 hours. The treated surfaces shall be protected from traffic and environmental effects until the area has cured. Excess aggregate shall be removed by hand brooms, mechanical sweeping, or suction sweeping before opening the roadway to traffic. Excess aggregate may be reused on the following day's installation, provided the aggregate is clean, uncontaminated, and dry. Jefferson Parish may require additional mechanical or vacuum sweeping, as necessary, after the system fully cures and the treated surface is open to traffic.

FRICTION ACCEPTANCE TESTING: Jefferson Parish will measure the friction characteristics in accordance with ASTM E274 within 90 days after construction of the high friction surface treatment. The minimum acceptable friction number (FN40R) shall be 65.

MEASUREMENT: The High Friction Surface Course will be measured by the square yard of completed and accepted work. No deduction will be made for the areas occupied by manholes, inlets, drainage structures, pavement markings, or by any public utility appurtenances within the area.

PAYMENT: The High Friction Surface Course shall be paid for at the contract unit price, which shall be full compensation for surface preparation, furnishing, preparing, hauling and placing materials including epoxy binder, removing existing pavement markings and excess aggregate as needed, and for labor, tools, equipment, and incidentals.

Payment will be made under:

ITEM NO.	PAY ITEM	PAY UNIT
0470	High Friction Surface Course	Square Yard

MODULAR LANE SEPARATOR SYSTEM

DESCRIPTION: This specification consists of furnishing and installing permanently mounted raised modular lane separator systems at specified locations in unincorporated Jefferson Parish.

The contractor shall be responsible for removal of the existing flex posts (if necessary) at the applicable locations prior to installation of the new modular system.

The contractor shall also be responsible for removal of the existing modular curb system at the applicable locations prior to installation of the new system. All existing curb units and posts shall be removed by the contractor and all holes left from the removal of the existing system shall be avoided when installing the new system.

MATERIALS: The modular lane separator shall be a system consisting of individual, longitudinal curb units and flexible, replaceable upright posts. The curb and uprights shall be white (for edge line applications).

The system shall have the capability of being linked together for continuous longitudinal channelizing applications on either straight or curved sections of roadway.

The system shall be FHWA approved and meet NCHRP 350 tests for crash worthiness.

The manufacturer shall provide a minimum 5 year warranty on the curb section and anchors, and a minimum 1 year warranty on the uprights.
Upon completion of the installation, the modular lane separator system shall become the property of Jefferson Parish.

The system (curb and upright posts) shall meet all requirements set forth in the following specifications.

Curb Unit

The curb unit shall be a modular design and shall be fastened to the underlying pavement according to the manufacturer's recommendations and shall require no more than 4 mounting bolts or anchors.

Each curb unit shall have a minimum of one drainage scupper or other drainage system to allow for cross drainage under the curb module.

Curb unit shall have a length of 30 to 40 inches. The curb sections shall be modular one-piece construction.

Curb unit shall have a width of 8 to 12.5 inches.

Curb unit shall have a height of 2 to 4 inches.

Curb unit shall be constructed of highly durable material, and shall resist fading and degradation from ultraviolet light, ozone, and hydrocarbons.

Curb units shall be fully mountable for EMS vehicles.
Curb unit end sections can be completed using an end cap.

The curb units shall have built-in openings for the attachment of upright posts or panels.

Upright Posts
Upright posts shall be no taller than 36 inches, and have a cross sectional area no wider than 3 inches (3" O.D. for round posts) facing traffic.

Each modular curb unit shall include at least one upright post.

The posts shall be uniformly spaced at no greater than 42 inches along the channelizing system.

The upright posts may be either round or flat-panel, and shall fully rebound to its original position when struck.

The upright posts shall mount into the curb section without the use of special tools and shall be easily replaceable under normal traffic conditions if damaged.

The upright posts shall be solid white in color and shall include a minimum of 100 square inches of White, super-high efficiency, full cube prismatic reflective sheeting on the face of the post. Round posts shall include two 6 inch bands of sheeting near the top of each post. The top band shall be located no more than 2 inches from the top of the post with a maximum 4 inch space between the bands. Flat panels shall include rectangular sheeting along the face of the panels. The sheeting must comply with Jefferson Parish Traffic Engineering Division specification #TE-007-2005, which is available upon request by contacting the Purchasing Department.

The upright posts shall be constructed of flexible polyurethane plastic or equivalent durable material resistant to crush and / or deformation upon impact.

Warranty:
Upon request and prior to award the contractor shall provide a manufacturer's warranty against damage from all normal vehicular roadway traffic for the curb sections and roadway anchors at 100% for the first two years, and at least 50% of the replacement value for three additional years.

Upon request and prior to award the contractor shall provide a 100% manufacturer's warranty covering impact damage to the upright posts / panels for the first year.

Upon request the contractor shall provide a FHWA letter of acceptance and approval for use on roadways.

The following modular lane separator systems are approved by FHWA:

Traffic Control Products FG300 Curb Systems
Impact Recovery Systems Tuff Curb
Qwick Kurb System

The contractor shall provide Jefferson Parish with the manufacturer's point of contact for the future purchase of replacement posts as it becomes necessary.

PAYMENT: The Modular Lane Separator System shall be paid for at the contract unit price, which shall be full compensation for surface preparation, furnishing, preparing, hauling and placing new materials, removing existing lane separators or flex posts and remaining aggregate as needed, and for labor, tools, equipment, and incidentals.

Payment will be made under:

ITEM NO.	PAY ITEM	PAY UNIT
0480	Modular Lane Separator System	Linear Foot

INVITATION TO BID
THIS IS NOT AN ORDER

JEFFERSON PARISH

PURCHASING DEPARTMENT
P.O. BOX 9
GRETNA, LA. 70054-0009
504-364-2678

BUYER: MOVALLE@jeffparish.net

BIDS WILL BE RECEIVED ONLINE VIA WWW.JEFFPARISHBIDS.NET UNTIL 2:00 PM, 2/25/2021 AND PUBLICLY OPENED THEREAFTER IN THE WEST BANK PURCHASING DEPT, SUITE 4400, JEFFERSON PARISH GENERAL GOVERNMENT BUILDING, 200 DERBIGNY STREET, GRETNA, LA 70053 AND VIA TELECONFERENCE (DIAL-IN AT (504) 323-1800, MEETING ID: 181357) At no charge, bidders are to submit via Jefferson Parish's electronic procurement page by visiting www.jeffparishbids.net to register for this free site. Additional instructions are included in the text box highlighting electronic procurement.

LATE BIDS WILL NOT BE ACCEPTED

NOTE: ONLY BIDS WRITTEN IN INK OR TYPEWRITTEN, AND PROPERLY SIGNED BY A MEMBER OF THE FIRM OR AUTHORIZED REPRESENTATIVE, WILL BE ACCEPTED. PENCIL AND/OR PHOTOSTATIC FIGURES OR SIGNATURES SHALL RESULT IN BID REJECTION. HOWEVER, ELECTRONIC SIGNATURES AS DEFINED IN LSA - R.S. 9:2620(8) ARE ACCEPTABLE. SIGNATURE MUST BE A SECURED DIGITAL SIGNATURE.

INSTRUCTIONS FOR BIDDERS AND GENERAL CONDITIONS

THE FOLLOWING INSTRUCTIONS APPLY TO ALL BIDS

All bids submitted are subject to these instructions and general conditions and any special conditions and specifications contained herein, all of which are made part of this bid proposal reference. By submitting a bid, vendor agrees to comply with all provisions of Louisiana Law as well be in compliance with the Jefferson Parish Code of Ordinances, Louisiana Code of Ethics, applicable Jefferson Parish ethical standards and Jefferson Parish Resolution No. 113646 and/or Resolution No. 113647 as amended.

Jefferson Parish adheres to the Louisiana Code of Governmental Ethics, contained in Louisiana Revised Statutes Annotated, R.S. 42:1101, et seq. Vendor/Proposer by this submission, warrants that there are no "conflicts of interest" related to this procurement that would violate applicable Louisiana Law. Violation of the Louisiana Code of Governmental Ethics may result in rescission of contract, permit or licenses, and the imposition of fines and/or penalties, without contractual liability to the public in accordance with applicable law.

All vendors submitting bids should register as a Jefferson Parish vendor if not already yet registered. Registration forms may be downloaded from http://purchasing.jeffparish.net and by clicking on Vendor Information. Current W-9 forms with respective Tax Identification numbers and vendor applications may be submitted at any time; however, if your company is not registered and/or a current W-9 form is not on file, vendor registration is mandatory. Vendors may experience a delay in payment if your company is not a registered vendor with Jefferson Parish.

All quotations shall be based on F.O.B. Agency warehouse or job site, anywhere within the Parish as designated by the Purchasing Department. This provision does not apply to public works projects

JEFFERSON PARISH requires all products to be new (current) and all work must be performed according to standard practices for the project. Unless otherwise specified, no aftermarket parts will be accepted. Unless otherwise specified, all workmanship and materials must have at least one (1) year guaranty, in writing, from the date of delivery and/or acceptance of the project. Any deviations or alterations from the specifications must be indicated and/or supporting documentation supplied with bid submission.

Bidders should submit all questions in writing via email to the buyer's email address as indicated above, no later than Five (5) working days prior to the bid opening. Bid numbers should be mentioned in all requests. If submitting online, vendors may send questions via the E-Procurement site no later than Five (5) working days prior to the bid opening.

If this bid requires a pre-bid conference (see Additional Requirements section), bidders are advised that such conference will be held to allow bidders the opportunity to identify any discrepancies in the bid specifications and seek further clarification regarding instructions. The Purchasing Department will issue a written response to bidders' questions in the form of an Addendum. Please note that all official communication will be expressed in the form of an addendum.

All formal Addenda require written acknowledgement on the bid form by the bidder. Failure to acknowledge an Addendum on the bid form shall cause the bid to be rejected. JEFFERSON PARISH reserves the right to award bid to next lowest responsive and responsible bidder in this event.

JEFFERSON PARISH will accept one price for each item unless otherwise indicated. Two or more prices for one item will result in bid rejection. Bidders are required to complete, sign and return the bid form and/or complete and return the associated line item pricing forms as indicated. Vendors must not alter the bid forms. Doing so will cause the bid to be rejected.

A corporate resolution or written evidence of the individual signing the bid having such authority must be submitted with the bid. Failure to comply will cause bid to be rejected. For corporate entities, such written evidence may be a printout of the Louisiana Secretary of State's website listing the signatory as an officer. Such printout shall be included with the bid submission. Bids submitted by Owners or Sole Proprietorships must include certification that he or she owns the entity for which the bid is signed. This documentation must be submitted with the bid. Failure to do so will result in bid rejection.

NOTE: A sample corporate resolution can be downloaded from our website http://purchasing.jeffparish.net or you may provide your own document. A sample certification of sole proprietorship can also be downloaded from our website http://purchasing.jeffparish.net or you may provide your own document.

INSTRUCTIONS FOR BIDDERS AND GENERAL CONDITIONS

A. AWARD OF CONTRACT: JEFFERSON PARISH reserves the right to award contracts or place orders on a lump sum or individual item basis, or such combination, as shall in its judgment be in the best interest of JEFFERSON PARISH. Every contract or order shall be awarded to the LOWEST RESPONSIVE and RESPONSIBLE BIDDER, taking into consideration the CONFORMITY WITH THE SPECIFICATIONS and the DELIVERY AND/OR COMPLETION DATE. SPLIT AWARDS MADE TO SEVERAL VENDORS WILL ONLY BE GRANTED TO THOSE DEEMED RESPONSIVE AND RESPONSIBLE.

All bid prices shall remain valid for 45 days. Jefferson Parish and the lowest responsive and responsible bidder(s) by mutual written consent may mutually agree to extend the deadline for award by one (1) or more extensions of thirty (30) calendar days.

PROTESTS: Only those vendors that submit bids in response to this solicitation may protest any element of the procurement, in writing to the Director of the Purchasing Department. Written protest must be received within 48 hours of the release of the bid tabulation by the Purchasing Department. After consultation, the Parish Attorney's Office will then respond to protests in writing. (For more information, please see Chapter 2, Article VII, Division 2, Sec. 2-914.1 of the Jefferson Parish Code of Ordinances.)

PREFERENCE: Unless federal funding is directly spent by Jefferson Parish for this purchase, preference is hereby given to materials, supplies, and provisions produced, manufactured or grown in Louisiana, quality being equal to articles offered by competitors outside the state. "LSA – R.S. 38:2251-2261"

B. USE OF BRAND NAMES AND STOCK NUMBERS: Where brand names and stock numbers are specified, it is for the purpose of establishing certain minimum standards of quality. Bids may be submitted for products of equal quality, provided brand names and stock numbers are specified. Complete product data may be required prior to award.

C. CANCELLATION OF CONTRACT: JEFFERSON PARISH reserves the right to cancel all or any part if not shipped promptly. No charges will be allowed for parking or cartage unless specified in quotation. The order must not be filled at a higher price than quoted. JEFFERSON PARISH reserves the right to cancel any contract at anytime and for any reason by issuing a THIRTY (30) day written notice to the contractor.

For good cause and as consideration for executing a contract with Jefferson Parish, vendor conveys, sells, assigns and transfers to Jefferson Parish or its assigns all rights, title and interest in and to all causes of action it may now or hereafter acquire under the antitrust laws of the United States and the State of Louisiana, relating to the particular good or services purchased or acquired by Jefferson Parish.

D. PRICES: Jefferson Parish is exempt from paying sales tax under LSA-R.S. 47:301 (8)(c). All prices for purchases by Jefferson Parish of supplies and materials shall be quoted in the unit of measure specified and unless otherwise specified, shall be exclusive of state and local taxes. The price quoted for work shall be stated in figures. In the event there is a difference in unit prices and totals, the unit price shall prevail.

Quantities listed are for bidding purposes only. Actual requirements may be more or less than quantities listed.

Bidders are not to exclude from participation in, deny the benefits of, or subject to discrimination under any program or activity, any person in the United States on the grounds of race, color, national origin, or sex; nor discriminate on the basis of age under the Age Discrimination Act of 1975, or with respect to an otherwise qualified handicapped individual as provided in Section 504 of the Rehabilitation Act of 1973, or on the basis of religion, except that any exemption from such prohibition against discrimination on the basis of religion as provided in the Civil Rights Act of 1964, or Title VI and VII of the Act of April 11, 1968, shall also apply. This assurance includes compliance with the administrative requirements of the Revenue Sharing final handicapped discrimination provisions contained in Section 51.55 (c), (d), (e), and (k)(5) of the Regulations. New construction or renovation projects must comply with Section 504 of the 1973 Rehabilitation Act, as amended, in accordance with the American National Standard Institute's specifications (ANSI A17.1-1961).

INSTRUCTIONS FOR BIDDERS AND GENERAL CONDITIONS

Jefferson Parish and its partners as the recipients of federal funds are fully committed to awarding a contract(s) to firm(s) that will provide high quality services and that are dedicated to diversity and to containing costs. Thus, Jefferson Parish strongly encourages the involvement of minority and/or woman-owned business enterprises (DBE's, including MBE's, WBE's and SBE's) to stimulate participation in procurement and assistance programs.

The purpose and intention of this invitation to bid is to afford all suppliers an equal opportunity to bid on all construction, maintenance, repair, operating supplies and/or equipment listed in this bid proposal. JEFFERSON PARISH WILL ACCEPT ONE BID ONLY FROM EACH VENDOR. Items bid must meet specifications.

Advertised bids will be tabulated and a copy of the tabulation will be forwarded to each responding bidder.

IN ACCORDANCE WITH STATE REGULATIONS JEFFERSON PARISH OFFERS ELECTRONIC PROCUREMENT TO ALL VENDORS

This electronic procurement system allows vendors the convenience of reviewing and submitting bids online. This is a secure site and authorized personnel have limited read access only. Bidders are to submit electronically using this free service; while the website accepts various file types, one single PDF file containing all appropriate and required bid documents is preferred. Bidders submitting uploaded images of bid responses are solely responsible for clarity. If uploaded images/documents are not legible, then bidder's submission will be rejected. Please note all requirements contained in this bid package for electronic bid submission.

Please visit our E-Procurement Page at www.jeffparishbids.net to register and view Jefferson Parish solicitations. For more information, please visit the Purchasing Department page at http://purchasing.jeffparish.net.

The general specifications for construction projects and the purchase of materials, services and/or supplies are those adopted by the JEFFERSON PARISH Council by Resolution No. 113646 or 113647 as amended. The general conditions adopted by this resolution shall be considered as much a part of this document as if they were written wholly herein. A copy may be obtained from the Office of the Parish Clerk, Suite 6700, Jefferson Parish General Government Building, 200 Derbigny Street, Gretna, LA 70053.
You may also obtain a copy by visiting the Purchasing Department webpage at http://purchasing.jeffparish.net and clicking on Online Forms.

ADDITIONAL REQUIREMENTS FOR THIS BID

PLEASE MATCH THE NUMBERS PRINTED IN THIS BOX WITH THE CORRESPONDING INSTRUCTIONS BELOW.

3,4,5,6,8,10,11,12,13,15

1. All bidders must attend the MANDATORY pre-bid conference and will be required to sign in and out as evidence of attendance. In accordance with LSA R.S. 38:2212(I), all prospective bidders shall be present at the beginning of the MANDATORY pre-bid conference and shall remain in attendance for the duration of the conference. Any prospective bidder who fails to attend the conference or remain for the duration shall be prohibited from submitting a bid for the project.

2. Attendance to this pre-bid conference is optional. However, failure to attend the pre-bid conference shall not relieve the bidder of responsibility for information discussed at the conference. Furthermore, failure to attend the pre-bid conference and inspection does not relieve the successful bidder from the necessity of furnishing materials or performing any work that may be required to complete the work in accordance with the specification with no additional cost to the owner.

3. Contractor must hold current applicable JEFFERSON PARISH licenses with the Department of Inspection and Code Enforcement. Contractor shall obtain any and all permits required by the JEFFERSON PARISH Department of Inspection and Code Enforcement. The contractor shall be responsible for the payment of these permits. All permits must be obtained prior to the start of the project. Contractor must also hold any and all applicable Federal and State licenses. Contractor shall be responsible for the payment of these permits and shall obtain them prior to the start of the project.

INSTRUCTIONS FOR BIDDERS AND GENERAL CONDITIONS

4. A LA State Contractor's License will be required in accordance with LSA R.S. 37-2150 et. seq. and such license number will be shown on the outside of the bid electronic envelope. Failure to comply will cause the bid to be rejected. When submitting the bid electronically, the license number must be entered in the appropriate field in the electronic procurement system. Failure to comply will cause the bid to be rejected.

5. It is the bidder's responsibility to visit the job site and evaluate the job before submitting a bid.

6. Job site must be clean and free of all litter and debris daily and upon completion of the contract. Passageways must be kept clean and free of material, equipment, and debris at all times. Flammable material must be removed from the job site daily because storage will not be permitted on the premises. Precaution must be exercised at all times to safeguard the welfare of JEFFERSON PARISH and the general public.

7. PUBLIC WORKS BIDS: All awards for public works in excess of $5,000.00 will be reduced to a formal contract which shall be recorded at the contractor's expense with the Clerk of Court and Ex-Officio Recorder of Mortgages for the Parish of Jefferson. A price list of recordation costs may be obtained from the Clerk of Court and Ex-Officio Recorder of Mortgages for the Parish of Jefferson. All awards in excess of $25,000.00 will require both a performance and a payment bond. Unless otherwise stated in the bid specifications, the performance bond requirements shall be 100% of the contract price. Unless otherwise state in the bid specifications, the payment bond requirements shall be 100% of the contract price. Both bonds shall be supplied at the signing of the contract.

8. NON-PUBLIC WORKS BIDS: A performance bond will be required for this bid. The amount of the bond will be 100% of the contract price unless otherwise indicated in the specifications. The performance bond shall be supplied at the signing of the contract.

9. NON-PUBLIC WORKS BIDS: A payment bond will be required for this bid. The amount of the bond will be 100% of the contract price unless otherwise indicated in the specifications. The payment bond shall be supplied at the signing of the contract.

10. All bidders must comply with the requirements stated in the attached "Standard Insurance Requirements" sheet attached to this bid solicitation. Failure to comply with this instruction will result in bid rejection.

11. A bid bond will be required with bid submission in the amount of 5% of the total bid, unless otherwise stated in the bid specifications. All sureties must be in original format (no copies) When submitting a bid online, vendors must submit an electronic bid bond through the respective online clearinghouse bond management system(s) as indicated in the electronic bid solicitation on Central Auction House. No scanned paper copies of any bid bond will be accepted as part of the electronic bid submission.

12. This is a requirements contract to be provided on an as needed basis. JEFFERSON PARISH makes no representations on warranties with regard to minimum guaranteed quantities unless otherwise stated in the bid specifications.

13. Freight charges should be included in total cost when quoting. If not quoted FOB DELIVERED, freight must be quoted as a separate item. Bid may be rejected if not quoted FOB DELIVERED or if freight charges are not indicated on bid form.

14. PUBLIC WORKS BIDS - Completed, Signed and Properly Notarized Affidavits Required; This applies to all solicitations for construction, alteration or demolition of public buildings or projects, in conformity with the provisions contained in LSA-RS 38:2212.9, LSA-RS 38:2212.10, LSA-RS 38:2224, and Sec 2-923.1 of the Jefferson Parish Code of Ordinances. For bidding purposes, all bidders must submit with bid submission COMPLETED, SIGNED and PROPERLY NOTARIZED Affidavits, including: Non-Conviction Affidavit, Non-Collusion Affidavit, Campaign Contribution Affidavit, Debt Disclosures Affidavit and E-Verify Affidavit. For the convenience of vendors, all affidavits have been combined into one form entitled PUBLIC WORKS BID AFFIDAVIT. This affidavit must be submitted in its original format, and without material alteration, in order to be compliant and for the bid to be considered responsive. A scanned copy of the completed, signed and properly notarized affidavit may be submitted with the bid, however, the successful bidder must submit the original affidavit in its original format and without material alteration upon contract execution. Failure to comply will result in the bid submission being rejected as non-responsive. The Parish reserves the right to award bid to the next lowest responsive and responsible bidder in this event.

INSTRUCTIONS FOR BIDDERS AND GENERAL CONDITIONS

15. NON PUBLIC WORK BIDS - Completed, Signed and Properly Notarized Affidavits Required in conformity with the provisions contained in LSA – RS 38:2224 and Sec 2-923.1 of the Jefferson Parish Code of Ordinances. For bidding purposes, all bidders must submit with bid submission COMPLETED, SIGNED and PROPERLY NOTARIZED Affidavits, including: Non-Collusion Affidavit, Debt Disclosures Affidavit and Campaign Contribution Affidavit. For the convenience of vendors, all affidavits have been combined into one form entitled NON PUBLIC WORKS BID AFFIDAVIT. This affidavit must be submitted in its original format, and without material alteration, in order to be compliant and for the bid to be considered responsive. A scanned copy of the completed, signed and properly notarized affidavit may be submitted with the bid, however, the successful bidder must submit the original affidavit in its original format and without material alteration upon contract execution. Failure to comply will result in the bid submission being rejected as non-responsive. The Parish reserves the right to award bid to the next lowest responsive and responsible bidder in this event.

16. The ensuing contract for this bid solicitation may be eligible for FEMA reimbursement and/or Federal funding/reimbursement. As such, the referenced appendix will be applicable accordingly and shall be considered a part of the bid documents. All applicable certifications must be duly completed, signed and submitted with bid submission. Failure to submit applicable certifications with bid submission will result in bid rejection.

17. For this project, the Contractor shall not pay any state or local sales or use taxes on materials and equipment which are affixed and made part of the immovable property of the project or which is permanently incorporated in the project (hereinafter referred to as "applicable materials and equipment."). All purchases of applicable materials or equipment shall be made by the contractor on behalf of and as the agent of Jefferson Parish (Owner), a political subdivision of the State of Louisiana. No state and local sales and use taxes are owed on applicable materials and equipment under the provisions of Act 1029 of the 1991 Regular Session - Louisiana Revised Statute 47:301(8)(c). Owner will furnish to contractor a certificate form which certifies that Owner is not required to pay such state or local sales and use taxes, and contractor shall furnish a copy of such certificate to all vendors or suppliers of the applicable materials and equipment, and report to Owner the amount of taxes not incurred.

It shall be the duty of every parish officer, employee, department, agency, special district, board, and commission: and the duty of every contractor, subcontractor, and licensee of the parish, and the duty of every applicant for certification of eligibility for a parish contract or program, to cooperate with the Inspector General in any investigation, audit, inspection, performance review, or hearing pursuant to JPCO 2-155.10(19). By signing this document, every corporation, partnership, or person contracting with PARISH, whether by cooperative endeavor, intergovernmental agreement, bid, proposal, application or solicitation for a parish contract, and every application for certification of eligibility for a parish contract or program, attests that it understands and will abide by all provisions of JPCO 2-155.10.

See Page 1 for Conflicts of Interest Statement

BID NO.: 50-00133211

BID FORM
Non Public Works

All Public Work Projects are required to use the Louisiana Uniform Public Work Bid Form

All prices must be held firm unless an escalation provision is requested in this bid. Jefferson Parish will allow one escalation during the term of the contract, which may not exceed the U.S. Bureau of Labor Statistics National Index for all Urban Consumers, unadjusted 12 month figure. The most recently published figure issued at the time an adjustment is requested will be used. A request must be made in writing by the vendor, and the escalation will only be applied to purchases made after the request is made.

Are you requesting an escalation provision?

YES _____ NO _____

MAXIMUM ESCALATION PERCENTAGE REQUESTED _____%

INITIAL BID PRICES WILL REMAIN FIRM THROUGH THE DATE OF _____.

For the purposes of comparison of bids when an escalation provision is requested, Jefferson Parish will apply the maximum escalation percentage quoted by the bidder to the period to which it is applied in the bid. The initial price and the escalation will be used to calculate the total bid price. It will be assumed,for comparison of prices only, that an equal amount of material or labor is purchased each month throughout the entire contract.

DELIVERY: FOB JEFFERSON PARISH

INDICATE DELIVERY DATE ON EQUIPMENT AND SUPPLIES _____

LOUISIANA CONTRACTOR'S LICENSE NO.: (if applicable) _____

THIS SECTION MUST BE COMPLETED BY BIDDER:

FIRM NAME: _____

ADDRESS: _____

CITY, STATE: _____ ZIP: _____

TELEPHONE: ( ) _____ FAX: ( ) _____

EMAIL ADDRESS: _____

In the event that addenda are issued with this bid, bidders MUST acknowledge all addenda on the bid form.Bidder must acknowledge receipt of an addendum on the bid form by placing the addendum number as indicated. Failure to acknowledge any addendum on the bid form will result in bid rejection.

Acknowledge Receipt of Addenda: NUMBER: _____

NUMBER: _____

NUMBER: _____

NUMBER: _____

TOTAL PRICE OF ALL BID ITEMS: $ _____

AUTHORIZED SIGNATURE: _____ _____

Printed Name

TITLE: _____

SIGNING INDICATES YOU HAVE READ AND COMPLY WITH THE INSTRUCTIONS AND CONDITIONS.

NOTE: All bids should be returned with the BID NUMBER and BID OPENING DATE indicated on the outside of the envelope submitted to the Purchasing Department.

INVITATION TO BID FROM JEFFERSON PARISH - continued

BID NO.: 50-00133211

SEALED BID

ITEM NUMBER	QUANTITY	U/M	DESCRIPTION OF ARTICLES	UNIT PRICE QUOTED	TOTALS
			TWO (2) YEAR CONTRACT FOR LABOR, MATERIALS AND EQUIPMENT TO REMOVE EXISTING AND INSTALL NEW THERMOPLASTIC PAVEMENT MARKINGS FOR THE EAST BANK OF JEFFERSON PARISH, TRAFFIC ENGINEERING		
1	10,000.00	LF	0010 REMOVAL OF EXISTING 4 INCH SOLID LONGITUDINAL MARKINGS		
2	5,000.00	LF	0020 REMOVAL OF EXISTING 4 INCH BROKEN LONGITUDINAL MARKINGS		
3	1,500.00	LF	0030 REMOVAL OF EXISTING 8 INCH SOLID LONGITUDINAL MARKINGS		
4	250.00	LF	0040 REMOVAL OF EXISTING 8 INCH BROKEN LONGITUDINAL MARKINGS		
5	500.00	LF	0050 REMOVAL OF EXISTING 12 INCH SOLID TRANSVERSE MARKINGS		
6	750.00	LF	0060 REMOVAL OF EXISTING 24 INCH SOLID TRANSVERSE MARKINGS		
7	50.00	EA	0070 REMOVAL OF EXISTING "ONLY" LEGEND		
8	5.00	EA	0080 REMOVAL OF EXISTING "SCHOOL" LEGEND 8 FOOT		
9	5.00	EA	0090 REMOVAL OF EXISTING "SCHOOL" LEGEND 10 FOOT		
10	5.00	EA	0100 REMOVAL OF EXISTING "R" LEGEND		
11	5.00	EA	0110 FURNISH AND INSTALL LEFT ARROW PAVEMENT MARKING		
12	20.00	EA	0120 FURNISH AND INSTALL STRAIGHT ARROW PAVEMENT MARKING		

INVITATION TO BID FROM JEFFERSON PARISH - continued

BID NO.: 50-00133211

SEALED BID

ITEM NUMBER	QUANTITY	U/M	DESCRIPTION OF ARTICLES	UNIT PRICE QUOTED	TOTALS
13	5.00	EA	0130 FURNISH AND INSTALL RIGHT ARROW PAVEMENT MARKING		
14	5.00	EA	0140 FURNISH AND INSTALL RIGHT/STRAIGHT ARROW PAVEMENT MARKING		
15	5.00	EA	0150 FURNISH AND INSTALL LEFT/STRAIGHT ARROW PAVEMENT MARKING		
16	5.00	EA	0160 FURNISH AND INSTALL "ONLY" LEGEND PAVEMENT MARKING		
17	5.00	EA	0170 FURNISH AND INSTALL "R" LEGEND PAVEMENT MARKING		
18	5.00	EA	0180 FURNISH AND INSTALL "SCHOOL" LEGEND - 8 FOOT PAVEMENT MARKING		
19	5.00	EA	0190 FURNISH AND INSTALL "SCHOOL" LEGEND - 10 FOOT PAVEMENT MARKING		
20	40,000.00	LF	0200 FURNISH AND INSTALL 4 INCH SOLID YELLOW LONGITUDINAL PAVEMENT MARKINGS - ASPHALT		
21	50,000.00	LF	0210 FURNISH AND INSTALL 4 INCH SOLID YELLOW LONGITUDINAL PAVEMENT MARKINGS - CONCRETE		
22	20,000.00	LF	0220 FURNISH AND INSTALL 4 INCH SOLID WHITE LONGITUDINAL PAVEMENT MARKINGS - ASPHALT		
23	40,000.00	LF	0230 FURNISH AND INSTALL 4 INCH SOLID WHITE LONGITUDINAL PAVEMENT MARKINGS - CONCRETE		
24	5,000.00	LF	0240 FURNISH AND INSTALL 4 INCH BROKEN YELLOW LONGITUDINAL PAVEMENT MARKINGS -		

INVITATION TO BID FROM JEFFERSON PARISH - continued

BID NO.: 50-00133211

SEALED BID

ITEM NUMBER	QUANTITY	U/M	DESCRIPTION OF ARTICLES	UNIT PRICE QUOTED	TOTALS
			ASPHALT		
25	5,000.00	LF	0250 FURNISH AND INSTALL 4 INCH BROKEN YELLOW LONGITUDINAL PAVEMENT MARKINGS - CONCRETE		
26	5,000.00	LF	0260 FURNISH AND INSTALL 4 INCH BROKEN WHITE LONGITUDINAL PAVEMENT MARKINGS - ASPHALT		
27	15,000.00	LF	0270 FURNISH AND INSTALL 4 INCH BROKEN WHITE LONGITUDINAL PAVEMENT MARKINGS - CONCRETE		
28	500.00	LF	0280 FURNISH AND INSTALL 8 INCH SOLID YELLOW LONGITUDINAL PAVEMENT MARKINGS - ASPHALT		
29	500.00	LF	0290 FURNISH AND INSTALL 8 INCH SOLID YELLOW LONGITUDINAL PAVEMENT MARKINGS - CONCRETE		
30	3,000.00	LF	0300 FURNISH AND INSTALL 8 INCH SOLID WHITE LONGITUDINAL PAVEMENT MARKINGS - ASPHALT		
31	3,000.00	LF	0310 FURNISH AND INSTALL 8 INCH SOLID WHITE LONGITUDINAL PAVEMENT MARKINGS - CONCRETE		
32	100.00	LF	0320 FURNISH AND INSTALL 8 INCH BROKEN YELLOW LONGITUDINAL PAVEMENT MARKINGS - ASPHALT		
33	100.00	LF	0330 FURNISH AND INSTALL 8 INCH BROKEN YELLOW LONGITUDINAL PAVEMENT MARKINGS - CONCRETE		
34	100.00	LF	0340 FURNISH AND INSTALL 8 INCH BROKEN WHITE LONGITUDINAL PAVEMENT MARKINGS - ASPHALT		

INVITATION TO BID FROM JEFFERSON PARISH - continued

BID NO.: 50-00133211

SEALED BID

ITEM NUMBER	QUANTITY	U/M	DESCRIPTION OF ARTICLES	UNIT PRICE QUOTED	TOTALS
35	100.00	LF	0350 FURNISH AND INSTALL 8 INCH BROKEN WHITE LONGITUDINAL PAVEMENT MARKINGS - CONCRETE		
36	500.00	LF	0360 FURNISH AND INSTALL 12 INCH SOLID TRANSVERSE PAVEMENT MARKINGS - ASPHALT		
37	2,500.00	LF	0370 FURNISH AND INSTALL 12 INCH SOLID TRANSVERSE PAVEMENT MARKINGS - CONCRETE		
38	4,000.00	LF	0380 FURNISH AND INSTALL 24 INCH SOLID TRANSVERSE PAVEMENT MARKINGS - ASPHALT		
39	2,000.00	LF	0390 FURNISH AND INSTALL 24 INCH SOLID TRANSVERSE PAVEMENT MARKINGS - CONCRETE		
40	1,500.00	LF	0400 FURNISH AND INSTALL 4 INCH SOLID WHITE LONGITUDINAL PAVEMENT MARKINGS - CONCRETE		
41	1,500.00	LF	0410 FURNISH AND INSTALL 4 INCH BROKEN WHITE LONGITUDINAL PAVEMENT MARKINGS - CONCRETE		
42	1,500.00	LF	0420 FURNISH AND INSTALL 8 INCH SOLID WHITE LONGITUDINAL PAVEMENT MARKINGS - CONCRETE		
43	2,000.00	LF	0430 FURNISH AND INSTALL 8 INCH BROKEN WHITE LONGITUDINAL PAVEMENT MARKINGS - CONCRETE		
44	5,000.00	EA	0440 FURNISH AND INSTALL WHITE/RED RAISED PAVEMENT MARKERS		
45	3,500.00	EA	0450 FURNISH AND INSTALL YELLOW RAISED PAVEMENT MARKERS		
46	2,000.00	EA	0460 REMOVAL OF RAISED PAVEMENT MARKERS		

INVITATION TO BID FROM JEFFERSON PARISH - continued

BID NO.: 50-00133211

SEALED BID

ITEM NUMBER	QUANTITY	U/M	DESCRIPTION OF ARTICLES	UNIT PRICE QUOTED	TOTALS
47	500.00	SQYD	0470 FURNISH AND APPLY HIGH FRICTION SURFACE COURSE		
48	500.00	LF	0480 FURNISH AND INSTALL MODULAR LANE SEPARATORS		

CORPORATE RESOLUTION

EXCERPT FROM MINUTES OF MEETING OF THE BOARD OF DIRECTORS OF

_____

INCORPORATED.

AT THE MEETING OF DIRECTORS OF _____
INCORPORATED, DULY NOTICED AND HELD ON _____,
A QUORUM BEING THERE PRESENT, ON MOTION DULY MADE AND SECONDED. IT WAS:

RESOLVED THAT _____, BE AND IS HEREBY APPOINTED, CONSTITUTED AND DESIGNATED AS AGENT AND ATTORNEY-IN-FACT OF THE CORPORATION WITH FULL POWER AND AUTHORITY TO ACT ON BEHALF OF THIS CORPORATION IN ALL NEGOTIATIONS, BIDDING, CONCERNS AND TRANSACTIONS WITH THE PARISH OF JEFFERSON OR ANY OF ITS AGENCIES, DEPARTMENTS, EMPLOYEES OR AGENTS, INCLUDING BUT NOT LIMITED TO, THE EXECUTION OF ALL BIDS, PAPERS, DOCUMENTS, AFFIDAVITS, BONDS, SURETIES, CONTRACTS AND ACTS AND TO RECEIVE ALL PURCHASE ORDERS AND NOTICES ISSUED PURSUANT TO THE PROVISIONS OF ANY SUCH BID OR CONTRACT, THIS CORPORATION HEREBY RATIFYING, APPROVING, CONFIRMING, AND ACCEPTING EACH AND EVERY SUCH ACT PERFORMED BY SAID AGENT AND ATTORNEY-IN-FACT.

I HEREBY CERTIFY THE FOREGOING TO BE A TRUE AND CORRECT COPY OF AN EXCERPT OF THE MINUTES OF THE ABOVE DATED MEETING OF THE BOARD OF DIRECTORS OF SAID CORPORATION, AND THE SAME HAS NOT BEEN REVOKED OR RESCINDED.

_____
SECRETARY-TREASURER

_____
DATE

Non-Public Works Bid
Affidavit Instructions

- **Affidavit is supplied as a courtesy to Affiants, but it is the responsibility of the affiant to insure the affidavit they submit to Jefferson Parish complies, in both form and content, with federal, state and parish laws.**
- **Affidavit must be signed by an authorized representative of the entity or the affidavit will not be accepted.**
- **Affidavit must be notarized or the affidavit will not be accepted.**
- **Notary must sign name, print name, and include bar/notary number, or the affidavit will not be accepted.**
- **Affiant MUST select either A or B when required or the affidavit will not be accepted.**
- **Affiants who select choice A must include an attachment or the affidavit will not be accepted.**
- **If both choice A and B are selected, the affidavit will not be accepted.**
- **Affidavit marked N/A will not be accepted.**
- **It is the responsibility of the Affiant to submit a new affidavit if any additional campaign contributions are made after the affidavit is executed but prior to the time the council acts on the matter.**

Instruction sheet may be omitted when submitting the affidavit

Non-Public Works Bid

AFFIDAVIT

STATE OF _____

PARISH/COUNTY OF _____

BEFORE ME, the undersigned authority, personally came and appeared: _____ _____, (Affiant) who after being by me duly sworn, deposed and said that he/she is the fully authorized _____ of _____ (Entity), the party who submitted a bid in response to Bid Number _____, to the Parish of Jefferson.

Affiant further said:

Campaign Contribution Disclosures

(Choose A or B, if option A is indicated please include the required attachment):

Choice A _____ Attached hereto is a list of all campaign contributions, including the date and amount of each contribution, made to current or former elected officials of the Parish of Jefferson by Entity, Affiant, and/or officers, directors and owners, including employees, owning 25% or more of the Entity during the two-year period immediately preceding the date of this affidavit or the current term of the elected official, whichever is greater. Further, Entity, Affiant, and/or Entity Owners have not made any contributions to or in support of current or former members of the Jefferson Parish Council or the Jefferson Parish President through or in the name of another person or legal entity, either directly or indirectly.

Choice B _____ there are **NO** campaign contributions made which would require disclosure under Choice A of this section.

Debt Disclosures

(Choose A <u>or</u> B, if option A is indicated please include the required attachment):

Choice A _____ Attached hereto is a list of all debts owed by the affiant to any elected or appointed official of the Parish of Jefferson, and any and all debts owed by any elected or appointed official of the Parish to the Affiant.

Choice B _____ There are **<u>NO</u>** debts which would require disclosure under Choice A of this section.

Affiant further said:

That Affiant has employed no person, corporation, firm, association, or other organization, either directly or indirectly, to secure the public contract under which he received payment, other than persons regularly employed by the Affiant whose services in connection with the construction, alteration or demolition of the public building or project or in securing the public contract were in the regular course of their duties for Affiant; and

[*The remainder of this page is intentionally left blank.*]

That no part of the contract price received by Affiant was paid or will be paid to any person, corporation, firm, association, or other organization for soliciting the contract, other than the payment of their normal compensation to persons regularly employed by the Affiant whose services in connection with the construction, alteration or demolition of the public building or project were in the regular course of their duties for Affiant.

_____
Signature of Affiant

_____
Printed Name of Affiant

SWORN AND SUBSCRIBED TO BEFORE ME
ON THE _____ DAY OF _____, 20___.

_____
Notary Public

_____
Printed Name of Notary

_____
Notary/Bar Roll Number

My commission expires _____.

STANDARD INSURANCE REQUIREMENTS FOR BIDDING PURPOSES

All required insurance under this bid shall conform to Jefferson Parish Resolution No. 113646 or No. 113647, as applicable. Contractors may not commence any work under any ensuing contract unless and until all required insurance and associated evidentiary requirements thereto have been met, along with any additional specifications contained in the **Invitation to Bid**. Except as where otherwise precluded by law, the Parish Attorney or his designee, with the concurrence of the Director of Risk Management or his designee, may agree on a case-by-case basis, to deviate from Jefferson Parish's standard insurance requirements, as provided in this Section. Vendors requesting deviation therefrom shall submit such requests in writing, along with compelling substantiation, to the Purchasing Department prior to the bid's due date. Any changes to the insurance requirements will be reflected in the bid specifications and addenda. Prior to contract execution and at all times thereafter during the term of such contract, contractors must provide and continuously maintain all coverages as required by the foregoing Resolutions, and the contract documents. Failure to do so shall be grounds for suspension, discontinuation or termination of the contract.

For bidding purposes, bidders must submit with bid submission a current (valid) insurance certificate evidencing the required coverages. Failure to comply will cause bid to be rejected. The current insurance certificate will be used for proof of insurance at time of evaluation. Thereafter, and prior to contract execution, the low bidder will be required to provide final insurance certificates to the Parish which shall name **the Jefferson Parish, its Districts Departments and Agencies under the direction of the Parish President and the Parish Council** as additional insureds regarding negligence by the contractor for the Commercial General Liability and the Comprehensive Automobile Liability policies. Additionally, said certificates should reflect the name of the Parish Department receiving goods and services and reference the respective Jefferson Parish bid number.

JEFFERSON PARISH REQUIRED STANDARD INSURANCE

☑ **WORKER'S COMPENSATION INSURANCE**

As required by Louisiana State Statute, exception; Employer's Liability, Section B shall be $1,000,000 per occurrence when Work is to be over water and involves maritime exposures to cover all employees not covered under the State Worker's Compensation Act, otherwise this limit shall be no less than $500,000 per occurrence.

Note: If your company is not required by law to carry workmen's compensation insurance, i.e. not a Louisiana company, sole employee of the company, then bidders must request a workmen's compensation insurance declaration affidavit prior to the bid opening date. This insurance declaration affidavit must be fully completed, signed, properly notarized and submitted with the bid. A scanned copy may be submitted with the bid; however, the successful bidder must submit the original affidavit in its original format and without material alteration upon contract execution. Failure to comply will result in the bid submission being

rejected as non-responsive. The Parish reserves the right to award bid to the next lowest responsive and responsible bidder in this event.

☑ **COMMERCIAL GENERAL LIABILITY**

Shall provide limits not less than the following: $1,000,000.00 Combined Single Limit per Occurrence for bodily injury and property damage.

☑ **COMPREHENSIVE AUTOMOBILE LIABILITY**

Bodily injury liability $1,000,000.00 each person; $1,000,000.00 each occurrence. Property Damage Liability $1,000,000.00 each occurrence.

Note: This category may be omitted if bidders do not/will not utilize company vehicles for the project or do not possess company vehicles. Bidder must request an automobile insurance declaration affidavit prior to the bid opening date. This insurance declaration affidavit must be fully completed, signed, properly notarized and submitted with the bid. A scanned copy of the completed, signed and properly notarized affidavit may be submitted with the bid; however, the successful bidder must submit the original affidavit in its original format and without material alteration upon contract execution. Failure to comply will result in the bid submission being rejected as non-responsive. The Parish reserves the right to award bid to the next lowest responsive and responsible bidder in this event.

DEDUCTIBLES - The Parish Attorney with concurrence of the Director of Risk Management have waived the deductible section of the Terms and Conditions for all Invitations to Bid, until further notice.

UMBRELLA LIABILITY COVERAGE

An umbrella policy or excess may be used to meet minimum requirements.

FOR CONSTRUCTION AND RENOVATION PROJECTS:

The following are required if selected below. Such insurance is due upon contract execution.

☐ **OWNER'S PROTECTIVE LIABILITY**

To be for the same limits of liability for bodily injury and property damage liability established for commercial general liability.

☐ **BUILDER'S RISK INSURANCE**

The contractor shall maintain Builder's Risk Insurance at his own expense to insure both the owner (Parish of Jefferson) and contractor as their interest may appear.

Bid Bond

An Electronic Bid Bond must be submitted with this bid, through one of the respective clearing houses at www.jeffparish.net or www.centralbidding.com. To access the bonding companies on Central Bidding, hover over the "Central Bidding" link at the top of the page and select the "Bid Bonds" link.
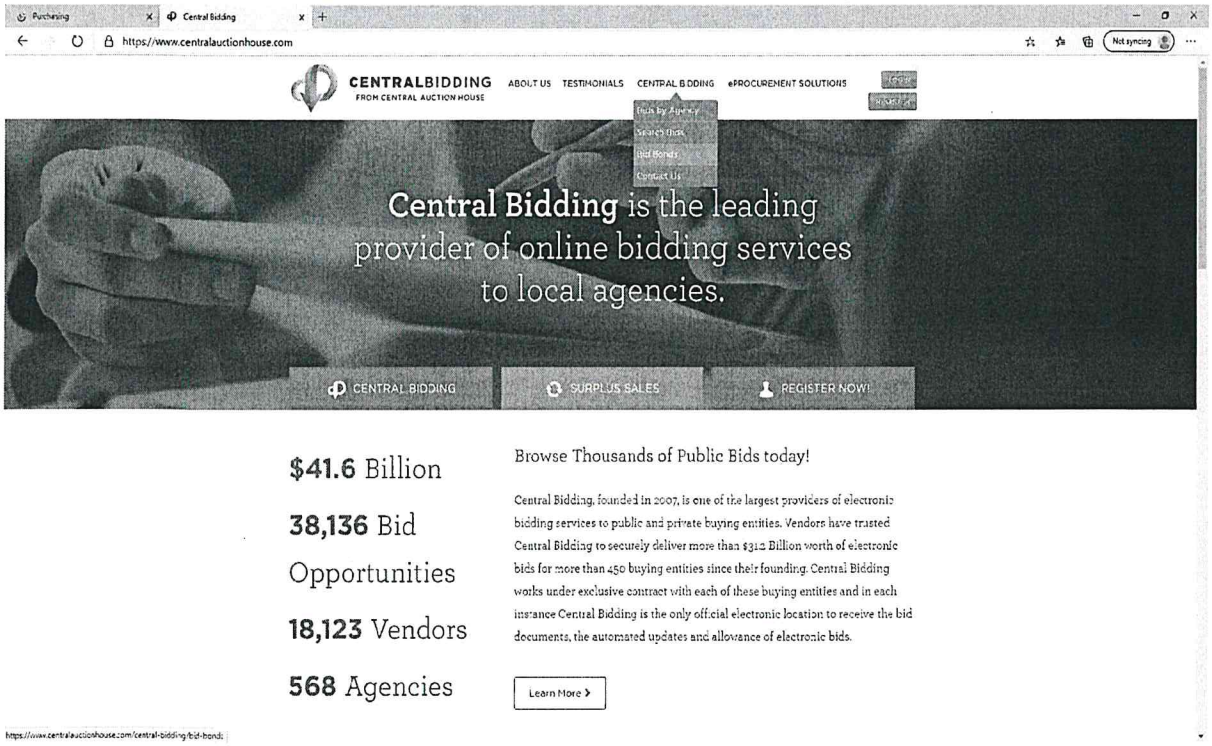
The electronic bid bond number is to be placed in the required section listed on the standard envelope. Scanned copies of bid bonds will not be accepted with your submission.